ecma INTERNATIONAL

Standard ECMA-262

11th Edition / June 2020

ECMAScript® 2020 Language Specification

Standard

Rue du Rhône 114 CH-1204 Geneva T: +41 22 849 6000 F: +41 22 849 6001

Ecma International
Rue du Rhone 114
CH-1204 Geneva
Tel: +41 22 849 6000
Fax: +41 22 849 6001
Web: https://www.ecma-international.org

ECMAScript® 2020 Language Specification

Contributing to this Specification

This specification is developed on GitHub with the help of the ECMAScript community. There are a number of ways to contribute to the development of this specification:

GitHub Repository: https://github.com/tc39/ecma262
Issues: All Issues, File a New Issue
Pull Requests: All Pull Requests, Create a New Pull Request
Test Suite: Test262
Editors:

- Jordan Harband (@ljharb)
- Kevin Smith (@zenparsing)

Community:

- Discourse: https://es.discourse.group
- IRC: #tc39 on freenode
- Mailing List Archives: https://esdiscuss.org/

Refer to the colophon for more information on how this document is created.

About this Specification

This document at https://tc39.es/ecma262/ is the most accurate and up-to-date ECMAScript specification. It contains the content of the most recent yearly snapshot plus any finished proposals (those that have reached Stage 4 in the proposal process and thus are implemented in several implementations and will be in the next practical revision) since that snapshot was taken.

Table of Contents

Introduction

This Ecma Standard defines the ECMAScript 2020 Language. It is the eleventh edition of the ECMAScript Language Specification. Since publication of the first edition in 1997, ECMAScript has grown to be one of the world's most widely used general-purpose programming languages. It is best known as the language embedded in web browsers but has also been widely adopted for server and embedded applications.

ECMAScript is based on several originating technologies, the most well-known being JavaScript (Netscape) and JScript (Microsoft). The language was invented by Brendan Eich at Netscape and first appeared in that company's Navigator 2.0 browser. It has appeared in all subsequent browsers from Netscape and in all browsers from Microsoft starting with Internet Explorer 3.0.

The development of the ECMAScript Language Specification started in November 1996. The first edition of this Ecma Standard was adopted by the Ecma General Assembly of June 1997.

That Ecma Standard was submitted to ISO/IEC JTC 1 for adoption under the fast-track procedure, and approved as international standard ISO/IEC 16262, in April 1998. The Ecma General Assembly of June 1998 approved the second edition of ECMA-262 to keep it fully aligned with ISO/IEC 16262. Changes between the first and the second edition are editorial in nature.

The third edition of the Standard introduced powerful regular expressions, better string handling, new control statements, try/catch exception handling, tighter definition of errors, formatting for numeric output and minor changes in anticipation of future language growth. The third edition of the ECMAScript standard was adopted by the Ecma General Assembly of December 1999 and published as ISO/IEC 16262:2002 in June 2002.

After publication of the third edition, ECMAScript achieved massive adoption in conjunction with the World Wide Web where it has become the programming language that is supported by essentially all web browsers. Significant work was done to develop a fourth edition of ECMAScript. However, that work was not completed and not published as the fourth edition of ECMAScript but some of it was incorporated into the development of the sixth edition.

The fifth edition of ECMAScript (published as ECMA-262 5th edition) codified de facto interpretations of the language specification that have become common among browser implementations and added support for new features that had emerged since the publication of the third edition. Such features include accessor properties, reflective creation and inspection of objects, program control of property attributes, additional array manipulation functions, support for the JSON object encoding format, and a strict mode that provides enhanced error checking and program security. The fifth edition was adopted by the Ecma General Assembly of December 2009.

The fifth edition was submitted to ISO/IEC JTC 1 for adoption under the fast-track procedure, and approved as international standard ISO/IEC 16262:2011. Edition 5.1 of the ECMAScript Standard incorporated minor corrections and is the same text as ISO/IEC 16262:2011. The 5.1 Edition was adopted by the Ecma General Assembly of June 2011.

Focused development of the sixth edition started in 2009, as the fifth edition was being prepared for publication. However, this was preceded by significant experimentation and language enhancement design efforts dating to the publication of the third edition in 1999. In a very real sense, the completion of the sixth edition is the culmination of a fifteen year effort. The goals for this edition included providing better support for large applications, library creation, and for use of ECMAScript as a compilation target for other languages. Some of its major enhancements included modules, class declarations, lexical block scoping, iterators and generators, promises for asynchronous programming, destructuring patterns, and proper tail calls. The ECMAScript library of built-ins was expanded to support additional data abstractions including maps, sets, and arrays of binary numeric values as well as additional support for Unicode supplemental characters in strings and regular expressions. The built-ins were also made extensible via subclassing.

The sixth edition provides the foundation for regular, incremental language and library enhancements. The sixth edition was adopted by the General Assembly of June 2015.

ECMAScript 2016 was the first ECMAScript edition released under Ecma TC39's new yearly release cadence and open development process. A plain-text source document was built from the ECMAScript 2015 source document to serve as the base for further development entirely on GitHub. Over the year of this standard's development, hundreds of pull requests and issues were filed representing thousands of bug fixes, editorial fixes and other improvements. Additionally, numerous software tools were developed to aid in this effort including Ecmarkup, Ecmarkdown, and Grammarkdown. ES2016 also included support for a new exponentiation operator and adds a new method to **`Array.prototype`** called **`includes`**.

ECMAScript 2017 introduced Async Functions, Shared Memory, and Atomics along with smaller language and library enhancements, bug fixes, and editorial updates. Async functions improve the asynchronous programming experience by providing syntax for promise-returning functions. Shared Memory and Atomics introduce a new memory model that allows multi-agent programs to communicate using atomic operations that ensure a well-defined execution order even on parallel CPUs. It also included new static methods on Object: **`Object.values`**, **`Object.entries`**, and **`Object.getOwnPropertyDescriptors`**.

ECMAScript 2018 introduced support for asynchronous iteration via the AsyncIterator protocol and async generators. It also included four new regular expression features: the **`dotAll`** flag, named capture groups, Unicode property escapes, and look-behind assertions. Lastly it included object rest and spread properties.

ECMAScript 2019 introduced a few new built-in functions: **`flat`** and **`flatMap`** on **`Array.prototype`** for flattening arrays, **`Object.fromEntries`** for directly turning the return value of **`Object.entries`** into a new Object, and **`trimStart`** and **`trimEnd`** on **`String.prototype`** as better-named alternatives to the widely implemented but non-standard **`String.prototype.trimLeft`** and **`trimRight`** built-ins. In addition, it included a few minor updates to syntax and semantics. Updated syntax included optional catch binding parameters and allowing U+2028 (LINE SEPARATOR) and U+2029 (PARAGRAPH SEPARATOR) in string literals to align with JSON. Other updates included requiring that **`Array.prototype.sort`** be a stable sort, requiring that **`JSON.stringify`** return well-formed UTF-8 regardless of input, and clarifying **`Function.prototype.toString`** by requiring that it either return the corresponding original source text or a standard placeholder.

This specification, the 11th edition, introduces the **`matchAll`** method for Strings, to produce an iterator for all match objects generated by a global regular expression; **`import()`**, a syntax to asynchronously import Modules with a dynamic specifier; **`BigInt`**, a new number primitive for working with arbitrary precision integers; **`Promise.allSettled`**, a new Promise combinator that does not short-circuit; **`globalThis`**, a universal way to access the global **`this`** value; dedicated **`export * as ns from 'module'`** syntax for use within modules; increased standardization of **`for-in`** enumeration order; **`import.meta`**, a host-populated object available in Modules that may contain contextual information about the Module; as well as adding two new syntax features to improve working with “nullish” values (**`null`** or **`undefined`**): nullish coalescing, a value selection operator; and optional chaining, a property access and function invocation operator that short-circuits if the value to access/invoke is nullish.

Dozens of individuals representing many organizations have made very significant contributions within Ecma TC39 to the development of this edition and to the prior editions. In addition, a vibrant community has emerged supporting TC39's ECMAScript efforts. This community has reviewed numerous drafts, filed thousands of bug reports, performed implementation experiments, contributed test suites, and educated the world-wide developer community about ECMAScript. Unfortunately, it is impossible to identify and acknowledge every person and organization who

has contributed to this effort.

Allen Wirfs-Brock
ECMA-262, Project Editor, 6th Edition

Brian Terlson
ECMA-262, Project Editor, 7th through 10th Editions

Jordan Harband
ECMA-262, Project Editor, 10th through 11th Editions

1 Scope

This Standard defines the ECMAScript 2020 general-purpose programming language.

2 Conformance

A conforming implementation of ECMAScript must provide and support all the types, values, objects, properties, functions, and program syntax and semantics described in this specification.

A conforming implementation of ECMAScript must interpret source text input in conformance with the latest version of the Unicode Standard and ISO/IEC 10646.

A conforming implementation of ECMAScript that provides an application programming interface (API) that supports programs that need to adapt to the linguistic and cultural conventions used by different human languages and countries must implement the interface defined by the most recent edition of ECMA-402 that is compatible with this specification.

A conforming implementation of ECMAScript may provide additional types, values, objects, properties, and functions beyond those described in this specification. In particular, a conforming implementation of ECMAScript may provide properties not described in this specification, and values for those properties, for objects that are described in this specification.

A conforming implementation of ECMAScript may support program and regular expression syntax not described in this specification. In particular, a conforming implementation of ECMAScript may support program syntax that makes use of any “future reserved words” noted in subclause 11.6.2 of this specification.

A conforming implementation of ECMAScript must not implement any extension that is listed as a Forbidden Extension in subclause 16.1.

3 Normative References

The following referenced documents are indispensable for the application of this document. For dated references, only the edition cited applies. For undated references, the latest edition of the referenced document (including any amendments) applies.

ISO/IEC 10646 *Information Technology — Universal Multiple-Octet Coded Character Set (UCS) plus Amendment 1:2005, Amendment 2:2006, Amendment 3:2008, and Amendment 4:2008*, plus additional amendments and corrigenda, or successor

ECMA-402, *ECMAScript 2015 Internationalization API Specification*.
https://ecma-international.org/publications/standards/Ecma-402.htm

ECMA-404, *The JSON Data Interchange Format*.
https://ecma-international.org/publications/standards/Ecma-404.htm

4 Overview

This section contains a non-normative overview of the ECMAScript language.

ECMAScript is an object-oriented programming language for performing computations and manipulating computational objects within a host environment. ECMAScript as defined here is not intended to be computationally self-sufficient; indeed, there are no provisions in this specification for input of external data or output of computed results. Instead, it is expected that the computational environment of an ECMAScript program will provide not only the objects and other facilities described in this specification but also certain environment-specific objects, whose description and behaviour are beyond the scope of this specification except to indicate that they may provide certain properties that can be accessed and certain functions that can be called from an ECMAScript program.

ECMAScript was originally designed to be used as a scripting language, but has become widely used as a general-purpose programming language. A *scripting language* is a programming language that is used to manipulate, customize, and automate the facilities of an existing system. In such systems, useful functionality is already available through a user interface, and the scripting language is a mechanism for exposing that functionality to program control. In this way, the existing system is said to provide a host environment of objects and facilities, which completes the capabilities of the scripting language. A scripting language is intended for use by both professional and non-professional programmers.

ECMAScript was originally designed to be a *Web scripting language*, providing a mechanism to enliven Web pages in browsers and to perform server computation as part of a Web-based client-server architecture. ECMAScript is now used to provide core scripting capabilities for a variety of host environments. Therefore the core language is specified in this document apart from any particular host environment.

ECMAScript usage has moved beyond simple scripting and it is now used for the full spectrum of programming tasks in many different environments and scales. As the usage of ECMAScript has expanded, so have the features and facilities it provides. ECMAScript is now a fully featured general-purpose programming language.

Some of the facilities of ECMAScript are similar to those used in other programming languages; in particular C, Java™, Self, and Scheme as described in:

ISO/IEC 9899:1996, *Programming Languages — C*.

Gosling, James, Bill Joy and Guy Steele. *The Java™ Language Specification*. Addison Wesley Publishing Co., 1996.

Ungar, David, and Smith, Randall B. Self: The Power of Simplicity. *OOPSLA '87 Conference Proceedings*, pp. 227-241, Orlando, FL, October 1987.

IEEE Standard for the Scheme Programming Language. IEEE Std 1178-1990.

4.1 Web Scripting

A web browser provides an ECMAScript host environment for client-side computation including, for instance, objects that represent windows, menus, pop-ups, dialog boxes, text areas, anchors, frames, history, cookies, and input/output. Further, the host environment provides a means to attach scripting code to events such as change of focus, page and image loading, unloading, error and abort, selection, form submission, and mouse actions. Scripting code appears within the HTML and the displayed page is a combination of user interface elements and fixed and computed text and images. The scripting code is reactive to user interaction, and there is no need for a main program.

A web server provides a different host environment for server-side computation including objects representing requests, clients, and files; and mechanisms to lock and share data. By using browser-side and server-side scripting together, it is possible to distribute computation between the client and server while providing a customized user interface for a Web-based application.

Each Web browser and server that supports ECMAScript supplies its own host environment, completing the ECMAScript execution environment.

4.2 ECMAScript Overview

The following is an informal overview of ECMAScript—not all parts of the language are described. This overview is not part of the standard proper.

ECMAScript is object-based: basic language and host facilities are provided by objects, and an ECMAScript program is a cluster of communicating objects. In ECMAScript, an *object* is a collection of zero or more *properties* each with *attributes* that determine how each property can be used—for example, when the Writable attribute for a property is set to **false**, any attempt by executed ECMAScript code to assign a different value to the property fails. Properties are containers that hold other objects, *primitive values*, or *functions*. A primitive value is a member of one of the following built-in types: **Undefined**, **Null**, **Boolean**, **Number**, **BigInt**, **String**, and **Symbol;** an object is a member of the built-in type **Object**; and a function is a callable object. A function that is associated with an object via a property is called a *method*.

ECMAScript defines a collection of *built-in objects* that round out the definition of ECMAScript entities. These built-in objects include the global object; objects that are fundamental to the runtime semantics of the language including **`Object`**, **`Function`**, **`Boolean`**, **`Symbol`**, and various **`Error`** objects; objects that represent and manipulate numeric values including **`Math`**, **`Number`**, and **`Date`**; the text processing objects **`String`** and **`RegExp`**; objects that are indexed collections of values including **`Array`** and nine different kinds of Typed Arrays whose elements all have a specific numeric data representation; keyed collections including **`Map`** and **`Set`** objects; objects supporting structured data including the **`JSON`** object, **`ArrayBuffer`**, **`SharedArrayBuffer`**, and **`DataView`**; objects supporting control abstractions including generator functions and **`Promise`** objects; and reflection objects including **`Proxy`** and **`Reflect`**.

ECMAScript also defines a set of built-in *operators*. ECMAScript operators include various unary operations, multiplicative operators, additive operators, bitwise shift operators, relational operators, equality operators, binary bitwise operators, binary logical operators, assignment operators, and the comma operator.

Large ECMAScript programs are supported by *modules* which allow a program to be divided into multiple sequences of statements and declarations. Each module explicitly identifies declarations it uses that need to be provided by other modules and which of its declarations are available for use by other modules.

ECMAScript syntax intentionally resembles Java syntax. ECMAScript syntax is relaxed to enable it to serve as an easy-to-use scripting language. For example, a variable is not required to have its type declared nor are types associated with properties, and defined functions are not required to have their declarations appear textually before calls to them.

4.2.1 Objects

Even though ECMAScript includes syntax for class definitions, ECMAScript objects are not fundamentally class-based such as those in C++, Smalltalk, or Java. Instead objects may be created in various ways including via a literal notation or via *constructors* which create objects and then execute code that initializes all or part of them by assigning initial values to their properties. Each constructor is a function that has a property named **"prototype"** that is used to implement *prototype-based inheritance* and *shared properties*. Objects are created by using constructors in **new** expressions; for example, `new Date(2009, 11)` creates a new Date object. Invoking a constructor without using **new** has consequences that depend on the constructor. For example, `Date()` produces a string representation of the current date and time rather than an object.

Every object created by a constructor has an implicit reference (called the object's *prototype*) to the value of its constructor's **"prototype"** property. Furthermore, a prototype may have a non-null implicit reference to its prototype, and so on; this is called the *prototype chain*. When a reference is made to a property in an object, that reference is to the property of that name in the first object in the prototype chain that contains a property of that name. In other words, first the object mentioned directly is examined for such a property; if that object contains the named property, that is the property to which the reference refers; if that object does not contain the named property, the prototype for that object is examined next; and so on.

Figure 1: Object/Prototype Relationships

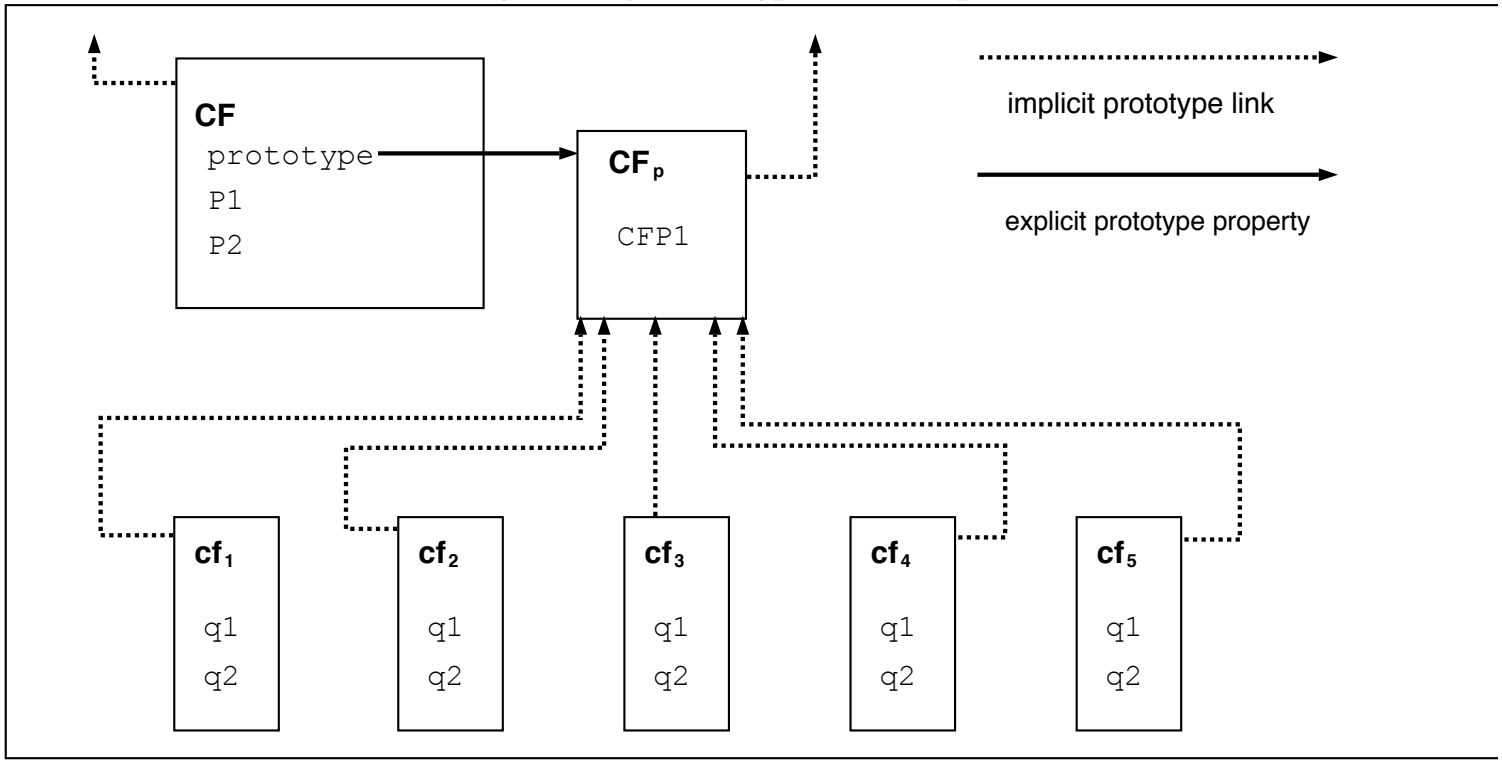

In a class-based object-oriented language, in general, state is carried by instances, methods are carried by classes, and inheritance is only of structure and behaviour. In ECMAScript, the state and methods are carried by objects, while

structure, behaviour, and state are all inherited.

All objects that do not directly contain a particular property that their prototype contains share that property and its value. Figure 1 illustrates this:

CF is a constructor (and also an object). Five objects have been created by using **`new`** expressions: $\mathbf{cf_1}$, $\mathbf{cf_2}$, $\mathbf{cf_3}$, $\mathbf{cf_4}$, and $\mathbf{cf_5}$. Each of these objects contains properties named **"q1"** and **"q2"**. The dashed lines represent the implicit prototype relationship; so, for example, $\mathbf{cf_3}$'s prototype is $\mathbf{CF_p}$. The constructor, **CF**, has two properties itself, named **"P1"** and **"P2"**, which are not visible to $\mathbf{CF_p}$, $\mathbf{cf_1}$, $\mathbf{cf_2}$, $\mathbf{cf_3}$, $\mathbf{cf_4}$, or $\mathbf{cf_5}$. The property named **"CFP1"** in $\mathbf{CF_p}$ is shared by $\mathbf{cf_1}$, $\mathbf{cf_2}$, $\mathbf{cf_3}$, $\mathbf{cf_4}$, and $\mathbf{cf_5}$ (but not by **CF**), as are any properties found in $\mathbf{CF_p}$'s implicit prototype chain that are not named **"q1"**, **"q2"**, or **"CFP1"**. Notice that there is no implicit prototype link between **CF** and $\mathbf{CF_p}$.

Unlike most class-based object languages, properties can be added to objects dynamically by assigning values to them. That is, constructors are not required to name or assign values to all or any of the constructed object's properties. In the above diagram, one could add a new shared property for $\mathbf{cf_1}$, $\mathbf{cf_2}$, $\mathbf{cf_3}$, $\mathbf{cf_4}$, and $\mathbf{cf_5}$ by assigning a new value to the property in $\mathbf{CF_p}$.

Although ECMAScript objects are not inherently class-based, it is often convenient to define class-like abstractions based upon a common pattern of constructor functions, prototype objects, and methods. The ECMAScript built-in objects themselves follow such a class-like pattern. Beginning with ECMAScript 2015, the ECMAScript language includes syntactic class definitions that permit programmers to concisely define objects that conform to the same class-like abstraction pattern used by the built-in objects.

4.2.2 The Strict Variant of ECMAScript

The ECMAScript Language recognizes the possibility that some users of the language may wish to restrict their usage of some features available in the language. They might do so in the interests of security, to avoid what they consider to be error-prone features, to get enhanced error checking, or for other reasons of their choosing. In support of this possibility, ECMAScript defines a strict variant of the language. The strict variant of the language excludes some specific syntactic and semantic features of the regular ECMAScript language and modifies the detailed semantics of some features. The strict variant also specifies additional error conditions that must be reported by throwing error exceptions in situations that are not specified as errors by the non-strict form of the language.

The strict variant of ECMAScript is commonly referred to as the *strict mode* of the language. Strict mode selection and use of the strict mode syntax and semantics of ECMAScript is explicitly made at the level of individual ECMAScript source text units. Because strict mode is selected at the level of a syntactic source text unit, strict mode only imposes restrictions that have local effect within such a source text unit. Strict mode does not restrict or modify any aspect of the ECMAScript semantics that must operate consistently across multiple source text units. A complete ECMAScript program may be composed of both strict mode and non-strict mode ECMAScript source text units. In this case, strict mode only applies when actually executing code that is defined within a strict mode source text unit.

In order to conform to this specification, an ECMAScript implementation must implement both the full unrestricted ECMAScript language and the strict variant of the ECMAScript language as defined by this specification. In addition, an implementation must support the combination of unrestricted and strict mode source text units into a single composite program.

4.3 Terms and Definitions

For the purposes of this document, the following terms and definitions apply.

4.3.1 type

set of data values as defined in clause 6 of this specification

4.3.2 primitive value

member of one of the types Undefined, Null, Boolean, Number, BigInt, Symbol, or String as defined in clause 6

> NOTE A primitive value is a datum that is represented directly at the lowest level of the language implementation.

4.3.3 object

member of the type Object

> NOTE An object is a collection of properties and has a single prototype object. The prototype may be the null value.

4.3.4 constructor

function object that creates and initializes objects

> NOTE The value of a constructor's **"prototype"** property is a prototype object that is used to implement inheritance and shared properties.

4.3.5 prototype

object that provides shared properties for other objects

> NOTE When a constructor creates an object, that object implicitly references the constructor's **"prototype"** property for the purpose of resolving property references. The constructor's **"prototype"** property can be referenced by the program expression ***`constructor`*`.``prototype`**, and properties added to an object's prototype are shared, through inheritance, by all objects sharing the prototype. Alternatively, a new object may be created with an explicitly specified prototype by using the **`Object.create`** built-in function.

4.3.6 ordinary object

object that has the default behaviour for the essential internal methods that must be supported by all objects

4.3.7 exotic object

object that does not have the default behaviour for one or more of the essential internal methods

NOTE Any object that is not an ordinary object is an exotic object.

4.3.8 standard object

object whose semantics are defined by this specification

4.3.9 built-in object

object specified and supplied by an ECMAScript implementation

NOTE Standard built-in objects are defined in this specification. An ECMAScript implementation may specify and supply additional kinds of built-in objects. A *built-in constructor* is a built-in object that is also a constructor.

4.3.10 undefined value

primitive value used when a variable has not been assigned a value

4.3.11 Undefined type

type whose sole value is the **undefined** value

4.3.12 null value

primitive value that represents the intentional absence of any object value

4.3.13 Null type

type whose sole value is the **null** value

4.3.14 Boolean value

member of the Boolean type

NOTE There are only two Boolean values, **true** and **false**.

4.3.15 Boolean type

type consisting of the primitive values **true** and **false**

4.3.16 Boolean object

member of the Object type that is an instance of the standard built-in **`Boolean`** constructor

> NOTE A Boolean object is created by using the **`Boolean`** constructor in a **`new`** expression, supplying a Boolean value as an argument. The resulting object has an internal slot whose value is the Boolean value. A Boolean object can be coerced to a Boolean value.

4.3.17 String value

primitive value that is a finite ordered sequence of zero or more 16-bit unsigned integer values

> NOTE A String value is a member of the String type. Each integer value in the sequence usually represents a single 16-bit unit of UTF-16 text. However, ECMAScript does not place any restrictions or requirements on the values except that they must be 16-bit unsigned integers.

4.3.18 String type

set of all possible String values

4.3.19 String object

member of the Object type that is an instance of the standard built-in **`String`** constructor

> NOTE A String object is created by using the **`String`** constructor in a **`new`** expression, supplying a String value as an argument. The resulting object has an internal slot whose value is the String value. A String object can be coerced to a String value by calling the **`String`** constructor as a function (21.1.1.1).

4.3.20 Number value

primitive value corresponding to a double-precision 64-bit binary format IEEE 754-2019 value

> NOTE A Number value is a member of the Number type and is a direct representation of a number.

4.3.21 Number type

set of all possible Number values including the special "Not-a-Number" (NaN) value, positive infinity, and negative infinity

4.3.22 Number object

member of the Object type that is an instance of the standard built-in **`Number`** constructor

NOTE A Number object is created by using the **`Number`** constructor in a **`new`** expression, supplying a Number value as an argument. The resulting object has an internal slot whose value is the Number value. A Number object can be coerced to a Number value by calling the **`Number`** constructor as a function (20.1.1.1).

4.3.23 Infinity

Number value that is the positive infinite Number value

4.3.24 NaN

Number value that is an IEEE 754-2019 “Not-a-Number” value

4.3.25 BigInt value

primitive value corresponding to an arbitrary-precision integer value

4.3.26 BigInt type

set of all possible BigInt values

4.3.27 BigInt object

member of the Object type that is an instance of the standard built-in **`BigInt`** constructor

4.3.28 Symbol value

primitive value that represents a unique, non-String Object property key

4.3.29 Symbol type

set of all possible Symbol values

4.3.30 Symbol object

member of the Object type that is an instance of the standard built-in **`Symbol`** constructor

4.3.31 function

member of the Object type that may be invoked as a subroutine

NOTE In addition to its properties, a function contains executable code and state that determine how it behaves when invoked. A function's code may or may not be written in ECMAScript.

4.3.32 built-in function

built-in object that is a function

> NOTE Examples of built-in functions include **`parseInt`** and **`Math.exp`**. An implementation may provide implementation-dependent built-in functions that are not described in this specification.

4.3.33 property

part of an object that associates a key (either a String value or a Symbol value) and a value

> NOTE Depending upon the form of the property the value may be represented either directly as a data value (a primitive value, an object, or a function object) or indirectly by a pair of accessor functions.

4.3.34 method

function that is the value of a property

> NOTE When a function is called as a method of an object, the object is passed to the function as its **this** value.

4.3.35 built-in method

method that is a built-in function

> NOTE Standard built-in methods are defined in this specification, and an ECMAScript implementation may specify and provide other additional built-in methods.

4.3.36 attribute

internal value that defines some characteristic of a property

4.3.37 own property

property that is directly contained by its object

4.3.38 inherited property

property of an object that is not an own property but is a property (either own or inherited) of the object's prototype

4.4 Organization of This Specification

The remainder of this specification is organized as follows:

Clause 5 defines the notational conventions used throughout the specification.

Clauses 6-9 define the execution environment within which ECMAScript programs operate.

Clauses 10-16 define the actual ECMAScript programming language including its syntactic encoding and the execution semantics of all language features.

Clauses 17-26 define the ECMAScript standard library. They include the definitions of all of the standard objects that are available for use by ECMAScript programs as they execute.

Clause 27 describes the memory consistency model of accesses on SharedArrayBuffer-backed memory and methods of the Atomics object.

5 Notational Conventions

5.1 Syntactic and Lexical Grammars

5.1.1 Context-Free Grammars

A *context-free grammar* consists of a number of *productions*. Each production has an abstract symbol called a *nonterminal* as its *left-hand side*, and a sequence of zero or more nonterminal and *terminal* symbols as its *right-hand side*. For each grammar, the terminal symbols are drawn from a specified alphabet.

A *chain production* is a production that has exactly one nonterminal symbol on its right-hand side along with zero or more terminal symbols.

Starting from a sentence consisting of a single distinguished nonterminal, called the *goal symbol*, a given context-free grammar specifies a *language*, namely, the (perhaps infinite) set of possible sequences of terminal symbols that can result from repeatedly replacing any nonterminal in the sequence with a right-hand side of a production for which the nonterminal is the left-hand side.

5.1.2 The Lexical and RegExp Grammars

A *lexical grammar* for ECMAScript is given in clause 11. This grammar has as its terminal symbols Unicode code points that conform to the rules for *SourceCharacter* defined in 10.1. It defines a set of productions, starting from the goal symbol *InputElementDiv*, *InputElementTemplateTail*, or *InputElementRegExp*, or *InputElementRegExpOrTemplateTail*, that describe how sequences of such code points are translated into a sequence of input elements.

Input elements other than white space and comments form the terminal symbols for the syntactic grammar for ECMAScript and are called ECMAScript *tokens*. These tokens are the reserved words, identifiers, literals, and punctuators of the ECMAScript language. Moreover, line terminators, although not considered to be tokens, also become part of the stream of input elements and guide the process of automatic semicolon insertion (11.9). Simple white space and single-line comments are discarded and do not appear in the stream of input elements for the syntactic grammar. A *MultiLineComment* (that is, a comment of the form **/***…***/** regardless of whether it spans more than one line) is likewise simply discarded if it contains no line terminator; but if a *MultiLineComment* contains one or

more line terminators, then it is replaced by a single line terminator, which becomes part of the stream of input elements for the syntactic grammar.

A *RegExp grammar* for ECMAScript is given in 21.2.1. This grammar also has as its terminal symbols the code points as defined by *SourceCharacter*. It defines a set of productions, starting from the goal symbol *Pattern*, that describe how sequences of code points are translated into regular expression patterns.

Productions of the lexical and RegExp grammars are distinguished by having two colons "**::**" as separating punctuation. The lexical and RegExp grammars share some productions.

5.1.3 The Numeric String Grammar

Another grammar is used for translating Strings into numeric values. This grammar is similar to the part of the lexical grammar having to do with numeric literals and has as its terminal symbols *SourceCharacter*. This grammar appears in 7.1.4.1.

Productions of the numeric string grammar are distinguished by having three colons "**:::**" as punctuation.

5.1.4 The Syntactic Grammar

The *syntactic grammar* for ECMAScript is given in clauses 11, 12, 13, 14, and 15. This grammar has ECMAScript tokens defined by the lexical grammar as its terminal symbols (5.1.2). It defines a set of productions, starting from two alternative goal symbols *Script* and *Module*, that describe how sequences of tokens form syntactically correct independent components of ECMAScript programs.

When a stream of code points is to be parsed as an ECMAScript *Script* or *Module*, it is first converted to a stream of input elements by repeated application of the lexical grammar; this stream of input elements is then parsed by a single application of the syntactic grammar. The input stream is syntactically in error if the tokens in the stream of input elements cannot be parsed as a single instance of the goal nonterminal (*Script* or *Module*), with no tokens left over.

When a parse is successful, it constructs a *parse tree*, a rooted tree structure in which each node is a *Parse Node*. Each Parse Node is an *instance* of a symbol in the grammar; it represents a span of the source text that can be derived from that symbol. The root node of the parse tree, representing the whole of the source text, is an instance of the parse's goal symbol. When a Parse Node is an instance of a nonterminal, it is also an instance of some production that has that nonterminal as its left-hand side. Moreover, it has zero or more *children*, one for each symbol on the production's right-hand side: each child is a Parse Node that is an instance of the corresponding symbol.

New Parse Nodes are instantiated for each invocation of the parser and never reused between parses even of identical source text. Parse Nodes are considered *the same Parse Node* if and only if they represent the same span of source text, are instances of the same grammar symbol, and resulted from the same parser invocation.

NOTE 1 Parsing the same String multiple times will lead to different Parse Nodes. For example, consider:

```
let str = "1 + 1;";
eval(str);
eval(str);
```

Each call to **`eval`** converts the value of **`str`** into an ECMAScript source text and performs an independent parse that creates its own separate tree of Parse Nodes. The trees are distinct even though each parse operates upon a source text that was derived from the same String value.

NOTE 2 Parse Nodes are specification artefacts, and implementations are not required to use an analogous data structure.

Productions of the syntactic grammar are distinguished by having just one colon "**:**" as punctuation.

The syntactic grammar as presented in clauses 12, 13, 14 and 15 is not a complete account of which token sequences are accepted as a correct ECMAScript *Script* or *Module*. Certain additional token sequences are also accepted, namely, those that would be described by the grammar if only semicolons were added to the sequence in certain places (such as before line terminator characters). Furthermore, certain token sequences that are described by the grammar are not considered acceptable if a line terminator character appears in certain "awkward" places.

In certain cases, in order to avoid ambiguities, the syntactic grammar uses generalized productions that permit token sequences that do not form a valid ECMAScript *Script* or *Module*. For example, this technique is used for object literals and object destructuring patterns. In such cases a more restrictive *supplemental grammar* is provided that further restricts the acceptable token sequences. Typically, an early error rule will then define an error condition if "*P* is not *covering* an *N*", where *P* is a Parse Node (an instance of the generalized production) and *N* is a nonterminal from the supplemental grammar. Here, the sequence of tokens originally matched by *P* is parsed again using *N* as the goal symbol. (If *N* takes grammatical parameters, then they are set to the same values used when *P* was originally parsed.) An error occurs if the sequence of tokens cannot be parsed as a single instance of *N*, with no tokens left over. Subsequently, algorithms access the result of the parse using a phrase of the form "the *N* that is *covered* by *P*". This will always be a Parse Node (an instance of *N*, unique for a given *P*), since any parsing failure would have been detected by an early error rule.

5.1.5 Grammar Notation

Terminal symbols are shown in **`fixed width`** font, both in the productions of the grammars and throughout this specification whenever the text directly refers to such a terminal symbol. These are to appear in a script exactly as written. All terminal symbol code points specified in this way are to be understood as the appropriate Unicode code points from the Basic Latin range, as opposed to any similar-looking code points from other Unicode ranges. A code point in a terminal symbol cannot be expressed by a **** *UnicodeEscapeSequence*.

Nonterminal symbols are shown in *italic* type. The definition of a nonterminal (also called a "production") is introduced by the name of the nonterminal being defined followed by one or more colons. (The number of colons indicates to which grammar the production belongs.) One or more alternative right-hand sides for the nonterminal then follow on succeeding lines. For example, the syntactic definition:

WhileStatement **:**
  `while` **(** *Expression* **)** *Statement*

states that the nonterminal *WhileStatement* represents the token **`while`**, followed by a left parenthesis token, followed by an *Expression*, followed by a right parenthesis token, followed by a *Statement*. The occurrences of *Expression* and *Statement* are themselves nonterminals. As another example, the syntactic definition:

ArgumentList **:**
  AssignmentExpression
  ArgumentList **,** *AssignmentExpression*

states that an *ArgumentList* may represent either a single *AssignmentExpression* or an *ArgumentList*, followed by a comma, followed by an *AssignmentExpression*. This definition of *ArgumentList* is recursive, that is, it is defined in terms of itself. The result is that an *ArgumentList* may contain any positive number of arguments, separated by commas, where each argument expression is an *AssignmentExpression*. Such recursive definitions of nonterminals are common.

The subscripted suffix "$_{\text{opt}}$", which may appear after a terminal or nonterminal, indicates an optional symbol. The alternative containing the optional symbol actually specifies two right-hand sides, one that omits the optional element and one that includes it. This means that:

VariableDeclaration **:**
  BindingIdentifier *Initializer*$_{\text{opt}}$

is a convenient abbreviation for:

VariableDeclaration **:**
  BindingIdentifier
  BindingIdentifier *Initializer*

and that:

IterationStatement **:**
  `for` **(** *LexicalDeclaration* *Expression*$_{\text{opt}}$ **;** *Expression*$_{\text{opt}}$ **)** *Statement*

is a convenient abbreviation for:

IterationStatement **:**
  `for` **(** *LexicalDeclaration* **;** *Expression*$_{\text{opt}}$ **)** *Statement*
  `for` **(** *LexicalDeclaration* *Expression* **;** *Expression*$_{\text{opt}}$ **)** *Statement*

which in turn is an abbreviation for:

IterationStatement **:**
  `for` **(** *LexicalDeclaration* **;** **)** *Statement*
  `for` **(** *LexicalDeclaration* **;** *Expression* **)** *Statement*
  `for` **(** *LexicalDeclaration* *Expression* **;** **)** *Statement*
  `for` **(** *LexicalDeclaration* *Expression* **;** *Expression* **)** *Statement*

so, in this example, the nonterminal *IterationStatement* actually has four alternative right-hand sides.

A production may be parameterized by a subscripted annotation of the form "$_{\text{[parameters]}}$", which may appear as a suffix to the nonterminal symbol defined by the production. "$_{\text{parameters}}$" may be either a single name or a comma separated list of names. A parameterized production is shorthand for a set of productions defining all combinations of the parameter names, preceded by an underscore, appended to the parameterized nonterminal symbol. This means that:

StatementList$_{[Return]}$ **:**
ReturnStatement
ExpressionStatement

is a convenient abbreviation for:

StatementList **:**
ReturnStatement
ExpressionStatement

StatementList_Return **:**
ReturnStatement
ExpressionStatement

and that:

StatementList$_{[Return, In]}$ **:**
ReturnStatement
ExpressionStatement

is an abbreviation for:

StatementList **:**
ReturnStatement
ExpressionStatement

StatementList_Return **:**
ReturnStatement
ExpressionStatement

StatementList_In **:**
ReturnStatement
ExpressionStatement

StatementList_Return_In **:**
ReturnStatement
ExpressionStatement

Multiple parameters produce a combinatory number of productions, not all of which are necessarily referenced in a complete grammar.

References to nonterminals on the right-hand side of a production can also be parameterized. For example:

StatementList **:**
ReturnStatement
ExpressionStatement$_{[+In]}$

is equivalent to saying:

StatementList **:**
ReturnStatement
ExpressionStatement_In

and:

StatementList **:**
ReturnStatement
ExpressionStatement[~In]

is equivalent to:

StatementList **:**
ReturnStatement
ExpressionStatement

A nonterminal reference may have both a parameter list and an "$_{opt}$" suffix. For example:

VariableDeclaration **:**
BindingIdentifier *Initializer*[+In] opt

is an abbreviation for:

VariableDeclaration **:**
BindingIdentifier
BindingIdentifier *Initializer_In*

Prefixing a parameter name with "?" on a right-hand side nonterminal reference makes that parameter value dependent upon the occurrence of the parameter name on the reference to the current production's left-hand side symbol. For example:

VariableDeclaration[In] **:**
BindingIdentifier *Initializer*[?In]

is an abbreviation for:

VariableDeclaration **:**
BindingIdentifier *Initializer*

VariableDeclaration_In **:**
BindingIdentifier *Initializer_In*

If a right-hand side alternative is prefixed with "[+parameter]" that alternative is only available if the named parameter was used in referencing the production's nonterminal symbol. If a right-hand side alternative is prefixed with "[~parameter]" that alternative is only available if the named parameter was *not* used in referencing the production's nonterminal symbol. This means that:

StatementList[Return] **:**
[+Return] *ReturnStatement*
ExpressionStatement

is an abbreviation for:

StatementList **:**
ExpressionStatement

StatementList_Return **:**

ReturnStatement
ExpressionStatement

and that:

StatementList[Return] **:**
[~Return] *ReturnStatement*
ExpressionStatement

is an abbreviation for:

StatementList **:**
ReturnStatement
ExpressionStatement

StatementList_Return **:**
ExpressionStatement

When the words "**one of**" follow the colon(s) in a grammar definition, they signify that each of the terminal symbols on the following line or lines is an alternative definition. For example, the lexical grammar for ECMAScript contains the production:

NonZeroDigit **::** **one of**
1 2 3 4 5 6 7 8 9

which is merely a convenient abbreviation for:

NonZeroDigit **::**
1
2
3
4
5
6
7
8
9

If the phrase "[empty]" appears as the right-hand side of a production, it indicates that the production's right-hand side contains no terminals or nonterminals.

If the phrase "[lookahead ∉ *set*]" appears in the right-hand side of a production, it indicates that the production may not be used if the immediately following input token sequence is a member of the given *set*. The *set* can be written as a comma separated list of one or two element terminal sequences enclosed in curly brackets. For convenience, the set can also be written as a nonterminal, in which case it represents the set of all terminals to which that nonterminal could expand. If the *set* consists of a single terminal the phrase "[lookahead ≠ *terminal*]" may be used.

For example, given the definitions:

DecimalDigit **::** **one of**
0 1 2 3 4 5 6 7 8 9

DecimalDigits **::**
DecimalDigit
DecimalDigits *DecimalDigit*

the definition:

LookaheadExample **::**
`n` [lookahead ∉ { `1` , `3` , `5` , `7` , `9` }] *DecimalDigits*
DecimalDigit [lookahead ∉ *DecimalDigit*]

matches either the letter `n` followed by one or more decimal digits the first of which is even, or a decimal digit not followed by another decimal digit.

Similarly, if the phrase "[lookahead ∈ *set*]" appears in the right-hand side of a production, it indicates that the production may only be used if the immediately following input token sequence is a member of the given *set*. If the *set* consists of a single terminal the phrase "[lookahead = *terminal*]" may be used.

If the phrase "[no *LineTerminator* here]" appears in the right-hand side of a production of the syntactic grammar, it indicates that the production is *a restricted production*: it may not be used if a *LineTerminator* occurs in the input stream at the indicated position. For example, the production:

ThrowStatement **:**
`throw` [no *LineTerminator* here] *Expression* `;`

indicates that the production may not be used if a *LineTerminator* occurs in the script between the `throw` token and the *Expression*.

Unless the presence of a *LineTerminator* is forbidden by a restricted production, any number of occurrences of *LineTerminator* may appear between any two consecutive tokens in the stream of input elements without affecting the syntactic acceptability of the script.

When an alternative in a production of the lexical grammar or the numeric string grammar appears to be a multi-code point token, it represents the sequence of code points that would make up such a token.

The right-hand side of a production may specify that certain expansions are not permitted by using the phrase "**but not**" and then indicating the expansions to be excluded. For example, the production:

Identifier **::**
IdentifierName but not *ReservedWord*

means that the nonterminal *Identifier* may be replaced by any sequence of code points that could replace *IdentifierName* provided that the same sequence of code points could not replace *ReservedWord*.

Finally, a few nonterminal symbols are described by a descriptive phrase in sans-serif type in cases where it would be impractical to list all the alternatives:

SourceCharacter **::**
any Unicode code point

5.2 Algorithm Conventions

The specification often uses a numbered list to specify steps in an algorithm. These algorithms are used to precisely specify the required semantics of ECMAScript language constructs. The algorithms are not intended to imply the use of any specific implementation technique. In practice, there may be more efficient algorithms available to implement a given feature.

Algorithms may be explicitly parameterized, in which case the names and usage of the parameters must be provided as part of the algorithm's definition.

Algorithm steps may be subdivided into sequential substeps. Substeps are indented and may themselves be further divided into indented substeps. Outline numbering conventions are used to identify substeps with the first level of substeps labelled with lower case alphabetic characters and the second level of substeps labelled with lower case roman numerals. If more than three levels are required these rules repeat with the fourth level using numeric labels. For example:

1. Top-level step
    a. Substep.
    b. Substep.
        i. Subsubstep.
            1. Subsubsubstep
                a. Subsubsubsubstep
                i. Subsubsubsubsubstep

A step or substep may be written as an “if” predicate that conditions its substeps. In this case, the substeps are only applied if the predicate is true. If a step or substep begins with the word “else”, it is a predicate that is the negation of the preceding “if” predicate step at the same level.

A step may specify the iterative application of its substeps.

A step that begins with “*Assert*:” asserts an invariant condition of its algorithm. Such assertions are used to make explicit algorithmic invariants that would otherwise be implicit. Such assertions add no additional semantic requirements and hence need not be checked by an implementation. They are used simply to clarify algorithms.

Algorithm steps may declare named aliases for any value using the form “Let *x* be *someValue*”. These aliases are reference-like in that both *x* and *someValue* refer to the same underlying data and modifications to either are visible to both. Algorithm steps that want to avoid this reference-like behaviour should explicitly make a copy of the right-hand side: “Let *x* be a copy of *someValue*” creates a shallow copy of *someValue*.

Once declared, an alias may be referenced in any subsequent steps and must not be referenced from steps prior to the alias's declaration. Aliases may be modified using the form “Set *x* to *someOtherValue*”.

5.2.1 Abstract Operations

In order to facilitate their use in multiple parts of this specification, some algorithms, called *abstract operations*, are named and written in parameterized functional form so that they may be referenced by name from within other algorithms. Abstract operations are typically referenced using a functional application style such as OperationName(*arg1*, *arg2*). Some abstract operations are treated as polymorphically dispatched methods of class-like specification abstractions. Such method-like abstract operations are typically referenced using a method application style such as *someValue*.OperationName(*arg1*, *arg2*).

5.2.2 Syntax-Directed Operations

A *syntax-directed operation* is a named operation whose definition consists of algorithms, each of which is associated with one or more productions from one of the ECMAScript grammars. A production that has multiple alternative definitions will typically have a distinct algorithm for each alternative. When an algorithm is associated with a grammar production, it may reference the terminal and nonterminal symbols of the production alternative as if they were parameters of the algorithm. When used in this manner, nonterminal symbols refer to the actual alternative definition that is matched when parsing the source text. The *source text matched by* a grammar production is the portion of the source text that starts at the beginning of the first terminal that participated in the match and ends at the end of the last terminal that participated in the match.

When an algorithm is associated with a production alternative, the alternative is typically shown without any "[ ]" grammar annotations. Such annotations should only affect the syntactic recognition of the alternative and have no effect on the associated semantics for the alternative.

Syntax-directed operations are invoked with a parse node and, optionally, other parameters by using the conventions on steps 1, 3, and 4 in the following algorithm:

1. Let *status* be SyntaxDirectedOperation of *SomeNonTerminal*.
2. Let *someParseNode* be the parse of some source text.
3. Perform SyntaxDirectedOperation of *someParseNode*.
4. Perform SyntaxDirectedOperation of *someParseNode* passing **"value"** as the argument.

Unless explicitly specified otherwise, all chain productions have an implicit definition for every operation that might be applied to that production's left-hand side nonterminal. The implicit definition simply reapplies the same operation with the same parameters, if any, to the chain production's sole right-hand side nonterminal and then returns the result. For example, assume that some algorithm has a step of the form: "Return the result of evaluating *Block*" and that there is a production:

Block **:**
    { *StatementList* **}**

but the Evaluation operation does not associate an algorithm with that production. In that case, the Evaluation operation implicitly includes an association of the form:

Runtime Semantics: Evaluation

Block **: {** *StatementList* **}**

1. Return the result of evaluating *StatementList*.

5.2.3 Runtime Semantics

Algorithms which specify semantics that must be called at runtime are called *runtime semantics*. Runtime semantics are defined by abstract operations or syntax-directed operations. Such algorithms always return a completion record.

5.2.3.1 Implicit Completion Values

The algorithms of this specification often implicitly return Completion Records whose [[Type]] is normal. Unless it is otherwise obvious from the context, an algorithm statement that returns a value that is not a Completion Record, such as:

1. Return **"Infinity"**.

means the same thing as:

1. Return NormalCompletion(**"Infinity"**).

However, if the value expression of a "return" statement is a Completion Record construction literal, the resulting Completion Record is returned. If the value expression is a call to an abstract operation, the "return" statement simply returns the Completion Record produced by the abstract operation.

The abstract operation Completion(*completionRecord*) is used to emphasize that a previously computed Completion Record is being returned. The Completion abstract operation takes a single argument, *completionRecord*, and performs the following steps:

1. Assert: *completionRecord* is a Completion Record.
2. Return *completionRecord* as the Completion Record of this abstract operation.

A "return" statement without a value in an algorithm step means the same thing as:

1. Return NormalCompletion(**undefined**).

Any reference to a Completion Record value that is in a context that does not explicitly require a complete Completion Record value is equivalent to an explicit reference to the [[Value]] field of the Completion Record value unless the Completion Record is an abrupt completion.

5.2.3.2 Throw an Exception

Algorithms steps that say to throw an exception, such as

1. Throw a **TypeError** exception.

mean the same things as:

1. Return ThrowCompletion(a newly created **TypeError** object).

5.2.3.3 ReturnIfAbrupt

Algorithms steps that say or are otherwise equivalent to:

1. ReturnIfAbrupt(*argument*).

mean the same thing as:

1. If *argument* is an abrupt completion, return *argument*.
2. Else if *argument* is a Completion Record, set *argument* to *argument*.[[Value]].

Algorithms steps that say or are otherwise equivalent to:

1. ReturnIfAbrupt(AbstractOperation()).

mean the same thing as:

1. Let *hygienicTemp* be AbstractOperation().
2. If *hygienicTemp* is an abrupt completion, return *hygienicTemp*.
3. Else if *hygienicTemp* is a Completion Record, set *hygienicTemp* to *hygienicTemp*.[[Value]].

Where *hygienicTemp* is ephemeral and visible only in the steps pertaining to ReturnIfAbrupt.

Algorithms steps that say or are otherwise equivalent to:

1. Let *result* be AbstractOperation(ReturnIfAbrupt(*argument*)).

mean the same thing as:

1. If *argument* is an abrupt completion, return *argument*.
2. If *argument* is a Completion Record, set *argument* to *argument*.[[Value]].
3. Let *result* be AbstractOperation(*argument*).

5.2.3.4 ReturnIfAbrupt Shorthands

Invocations of abstract operations and syntax-directed operations that are prefixed by **?** indicate that ReturnIfAbrupt should be applied to the resulting Completion Record. For example, the step:

1. ? OperationName().

is equivalent to the following step:

1. ReturnIfAbrupt(OperationName()).

Similarly, for method application style, the step:

1. ? *someValue*.OperationName().

is equivalent to:

1. ReturnIfAbrupt(*someValue*.OperationName()).

Similarly, prefix **!** is used to indicate that the following invocation of an abstract or syntax-directed operation will never return an abrupt completion and that the resulting Completion Record's [[Value]] field should be used in place of the return value of the operation. For example, the step:

1. Let *val* be ! OperationName().

is equivalent to the following steps:

1. Let *val* be OperationName().
2. Assert: *val* is never an abrupt completion.
3. If *val* is a Completion Record, set *val* to *val*.[[Value]].

Syntax-directed operations for runtime semantics make use of this shorthand by placing **!** or **?** before the invocation of the operation:

1. Perform ! SyntaxDirectedOperation of *NonTerminal*.

5.2.4 Static Semantics

Context-free grammars are not sufficiently powerful to express all the rules that define whether a stream of input elements form a valid ECMAScript *Script* or *Module* that may be evaluated. In some situations additional rules are needed that may be expressed using either ECMAScript algorithm conventions or prose requirements. Such rules are

always associated with a production of a grammar and are called the *static semantics* of the production.

Static Semantic Rules have names and typically are defined using an algorithm. Named Static Semantic Rules are associated with grammar productions and a production that has multiple alternative definitions will typically have for each alternative a distinct algorithm for each applicable named static semantic rule.

Unless otherwise specified every grammar production alternative in this specification implicitly has a definition for a static semantic rule named Contains which takes an argument named *symbol* whose value is a terminal or nonterminal of the grammar that includes the associated production. The default definition of Contains is:

1. For each child node *child* of this Parse Node, do
    a. If *child* is an instance of *symbol*, return **true**.
    b. If *child* is an instance of a nonterminal, then
        i. Let *contained* be the result of *child* Contains *symbol*.
        ii. If *contained* is **true**, return **true**.
2. Return **false**.

The above definition is explicitly over-ridden for specific productions.

A special kind of static semantic rule is an *Early Error Rule*. Early error rules define early error conditions (see clause 16) that are associated with specific grammar productions. Evaluation of most early error rules are not explicitly invoked within the algorithms of this specification. A conforming implementation must, prior to the first evaluation of a *Script* or *Module*, validate all of the early error rules of the productions used to parse that *Script* or *Module*. If any of the early error rules are violated the *Script* or *Module* is invalid and cannot be evaluated.

5.2.5 Mathematical Operations

This specification makes reference to two kinds of numeric values:

- *Number*: IEEE 754-2019 double-precision floating point values, used as the default numeric type.
- *Mathematical value*: Arbitrary real numbers, used for specific situations.

In the language of this specification, numerical values and operations (including addition, subtraction, negation, multiplication, division, and comparison) are distinguished among different numeric kinds using subscripts. The subscript $_{\mathbb{F}}$ refers to Numbers, and the subscript $_{\mathbb{R}}$ refers to mathematical values. A subscript is used following each numeric value and operation.

For brevity, the $_{\mathbb{F}}$ subscript can be omitted on Number values—a numeric value with no subscript is interpreted to be a Number. An operation with no subscript is interpreted to be a Number operation, unless one of the parameters has a particular subscript, in which case the operation adopts that subscript. For example, $1_{\mathbb{R}} + 2_{\mathbb{R}} = 3_{\mathbb{R}}$ is a statement about mathematical values, and $1 + 2 = 3$ is a statement about Numbers.

In general, when this specification refers to a numerical value, such as in the phrase, "the length of *y*" or "the integer represented by the four hexadecimal digits ...", without explicitly specifying a numeric kind, the phrase refers to a Number. Phrases which refer to a mathematical value are explicitly annotated as such; for example, "the mathematical value of the number of code points in ...".

It is not defined to mix Numbers and mathematical values in either arithmetic or comparison operations, and any such undefined operation would be an editorial error in this specification text.

The Number value 0, alternatively written $0_{\mathbb{F}}$, is defined as the double-precision floating point positive zero value. In

certain contexts, it may also be written as **+0** for clarity.

This specification denotes most numeric values in base 10; it also uses numeric values of the form 0x followed by digits 0-9 or A-F as base-16 values.

In certain contexts, an operation is specified which is generic between Numbers and mathematical values. In these cases, the subscript can be a variable; t is often used for this purpose, for example $5_t \times 10_t = 50_t$ for any t ranging over $\mathbb{R}$ and $\mathbb{F}$, since the values involved are within the range where the semantics coincide.

Conversions between mathematical values and numbers are never implicit, and always explicit in this document. A conversion from a mathematical value to a Number is denoted as "the Number value for x", and is defined in 6.1.6.1. A conversion from a Number to a mathematical value is denoted as "the *mathematical value* of x", or $\mathbb{R}(x)$. Note that the mathematical value of non-finite values is not defined, and the mathematical value of **+0** and **-0** is the mathematical value $0_{\mathbb{R}}$.

When the term *integer* is used in this specification, it refers to a Number value whose mathematical value is in the set of integers, unless otherwise stated: when the term *mathematical integer* is used in this specification, it refers to a mathematical value which is in the set of integers. As shorthand, integer_t can be used to refer to either of the two, as determined by t.

The mathematical function $\text{abs}_t(x)$ produces the absolute value of x, which is $-_t x$ if $x <_t 0_t$ and otherwise is x itself.

The mathematical function $\text{min}_t(x1, x2, \ldots, xN)$ produces the mathematically smallest of $x1$ through xN. The mathematical function $\text{max}_t(x1, x2, ..., xN)$ produces the mathematically largest of $x1$ through xN. The domain and range of these mathematical functions include +∞ and -∞.

The notation "x modulo_t y" (y must be finite and nonzero) computes a value k of the same sign as y (or zero) such that $\text{abs}_t(k) <_t \text{abs}_t(y)$ and $x -_t k = q \times_t y$ for some integer_t q.

The mathematical function $\text{floor}_t(x)$ produces the largest integer_t (closest to positive infinity) that is not larger than x.

NOTE $\text{floor}_t(x) = x -_t (x \text{ modulo}_t 1_t)$.

5.2.6 Value Notation

In this specification, ECMAScript language values are displayed in **bold**. Examples include **null**, **true**, or **"hello"**. These are distinguished from longer ECMAScript code sequences such as `Function.prototype.apply` or `let n = 42;`.

Values which are internal to the specification and not directly observable from ECMAScript code are indicated with a sans-serif typeface. For instance, a Completion Record's [[Type]] field takes on values like normal, return, or throw.

6 ECMAScript Data Types and Values

Algorithms within this specification manipulate values each of which has an associated type. The possible value types are exactly those defined in this clause. Types are further subclassified into ECMAScript language types and specification types.

Within this specification, the notation "Type(*x*)" is used as shorthand for "the *type* of *x*" where "type" refers to the ECMAScript language and specification types defined in this clause. When the term "empty" is used as if it was naming a value, it is equivalent to saying "no value of any type".

6.1 ECMAScript Language Types

An *ECMAScript language type* corresponds to values that are directly manipulated by an ECMAScript programmer using the ECMAScript language. The ECMAScript language types are Undefined, Null, Boolean, String, Symbol, Number, BigInt, and Object. An *ECMAScript language value* is a value that is characterized by an ECMAScript language type.

6.1.1 The Undefined Type

The Undefined type has exactly one value, called **undefined**. Any variable that has not been assigned a value has the value **undefined**.

6.1.2 The Null Type

The Null type has exactly one value, called **null**.

6.1.3 The Boolean Type

The Boolean type represents a logical entity having two values, called **true** and **false**.

6.1.4 The String Type

The String type is the set of all ordered sequences of zero or more 16-bit unsigned integer values ("elements") up to a maximum length of 2^{53} - 1 elements. The String type is generally used to represent textual data in a running ECMAScript program, in which case each element in the String is treated as a UTF-16 code unit value. Each element is regarded as occupying a position within the sequence. These positions are indexed with nonnegative integers. The first element (if any) is at index 0, the next element (if any) at index 1, and so on. The length of a String is the number of elements (i.e., 16-bit values) within it. The empty String has length zero and therefore contains no elements.

ECMAScript operations that do not interpret String contents apply no further semantics. Operations that do interpret String values treat each element as a single UTF-16 code unit. However, ECMAScript does not restrict the value of or relationships between these code units, so operations that further interpret String contents as sequences of Unicode code points encoded in UTF-16 must account for ill-formed subsequences. Such operations apply special treatment to every code unit with a numeric value in the inclusive range 0xD800 to 0xDBFF (defined by the Unicode Standard as a *leading surrogate*, or more formally as a *high-surrogate code unit*) and every code unit with a numeric value in the inclusive range 0xDC00 to 0xDFFF (defined as a *trailing surrogate*, or more formally as a *low-surrogate code unit*) using the following rules:

- A code unit that is not a leading surrogate and not a trailing surrogate is interpreted as a code point with the same value.
- A sequence of two code units, where the first code unit *c1* is a leading surrogate and the second code unit *c2* a trailing surrogate, is a *surrogate pair* and is interpreted as a code point with the value (*c1* - 0xD800) × 0x400 + (*c2* - 0xDC00) + 0x10000. (See 10.1.3)

- A code unit that is a leading surrogate or trailing surrogate, but is not part of a surrogate pair, is interpreted as a code point with the same value.

The function **`String.prototype.normalize`** (see 21.1.3.13) can be used to explicitly normalize a String value. **`String.prototype.localeCompare`** (see 21.1.3.10) internally normalizes String values, but no other operations implicitly normalize the strings upon which they operate. Only operations that are explicitly specified to be language or locale sensitive produce language-sensitive results.

> NOTE The rationale behind this design was to keep the implementation of Strings as simple and high-performing as possible. If ECMAScript source text is in Normalized Form C, string literals are guaranteed to also be normalized, as long as they do not contain any Unicode escape sequences.

In this specification, the phrase "the *string-concatenation* of *A*, *B*, ..." (where each argument is a String value, a code unit, or a sequence of code units) denotes the String value whose sequence of code units is the concatenation of the code units (in order) of each of the arguments (in order).

6.1.5 The Symbol Type

The Symbol type is the set of all non-String values that may be used as the key of an Object property (6.1.7).

Each possible Symbol value is unique and immutable.

Each Symbol value immutably holds an associated value called [[Description]] that is either **undefined** or a String value.

6.1.5.1 Well-Known Symbols

Well-known symbols are built-in Symbol values that are explicitly referenced by algorithms of this specification. They are typically used as the keys of properties whose values serve as extension points of a specification algorithm. Unless otherwise specified, well-known symbols values are shared by all realms (8.2).

Within this specification a well-known symbol is referred to by using a notation of the form @@name, where “name” is one of the values listed in Table 1.

Table 1: Well-known Symbols

Specification Name	[[Description]]	Value and Purpose
@@asyncIterator	**"Symbol.asyncIterator"**	A method that returns the default AsyncIterator for an object. Called by the semantics of the **`for-await-of`** statement.
@@hasInstance	**"Symbol.hasInstance"**	A method that determines if a constructor object recognizes an object as one of the constructor's instances. Called by the semantics of the **`instanceof`** operator.
@@isConcatSpreadable	**"Symbol.isConcatSpreadable"**	A Boolean valued property that if true indicates that an object should be flattened to its array elements by **`Array.prototype.concat`**.
@@iterator	**"Symbol.iterator"**	A method that returns the default Iterator for an object.

		Called by the semantics of the for-of statement.
@@match	**"Symbol.match"**	A regular expression method that matches the regular expression against a string. Called by the `String.prototype.match` method.
@@matchAll	**"Symbol.matchAll"**	A regular expression method that returns an iterator, that yields matches of the regular expression against a string. Called by the `String.prototype.matchAll` method.
@@replace	**"Symbol.replace"**	A regular expression method that replaces matched substrings of a string. Called by the `String.prototype.replace` method.
@@search	**"Symbol.search"**	A regular expression method that returns the index within a string that matches the regular expression. Called by the `String.prototype.search` method.
@@species	**"Symbol.species"**	A function valued property that is the constructor function that is used to create derived objects.
@@split	**"Symbol.split"**	A regular expression method that splits a string at the indices that match the regular expression. Called by the `String.prototype.split` method.
@@toPrimitive	**"Symbol.toPrimitive"**	A method that converts an object to a corresponding primitive value. Called by the ToPrimitive abstract operation.
@@toStringTag	**"Symbol.toStringTag"**	A String valued property that is used in the creation of the default string description of an object. Accessed by the built-in method `Object.prototype.toString`.
@@unscopables	**"Symbol.unscopables"**	An object valued property whose own and inherited property names are property names that are excluded from the **`with`** environment bindings of the associated object.

6.1.6 Numeric Types

ECMAScript has two built-in numeric types: Number and BigInt. In this specification, every numeric type *T* contains a multiplicative identity value denoted *T*::unit. The specification types also have the following abstract operations, likewise denoted *T*::*op* for a given operation with specification name *op*. All argument types are *T*. The "Result" column shows the return type, along with an indication if it is possible for some invocations of the operation to return an abrupt completion.

Table 2: Numeric Type Operations

Invocation Synopsis	Example	Invoked by the Evaluation semantics of ...	Result

	source		
T::unaryMinus(x)	`-x`	Unary - Operator	*T*
T::bitwiseNOT(x)	`~x`	Bitwise NOT Operator (`~`)	*T*
T::exponentiate(x, y)	`x ** y`	Exponentiation Operator and Math.pow (*base, exponent*)	*T*, may throw **RangeError**
T::multiply(x, y)	`x * y`	Multiplicative Operators	*T*
T::divide(x, y)	`x / y`	Multiplicative Operators	*T*, may throw **RangeError**
T::remainder(x, y)	`x % y`	Multiplicative Operators	*T*, may throw **RangeError**

T::add(x, y)	`x ++`
	`++ x`
	`x + y`
		Postfix Increment Operator, Prefix Increment Operator, and The Addition Operator (`+`)	*T*

T::subtract(x, y)	`x --`
	`-- x`
	`x - y`
		Postfix Decrement Operator, Prefix Decrement Operator, and The Subtraction Operator (`-`)	*T*

T::leftShift(x, y)	`x << y`	The Left Shift Operator (`<<`)	*T*
T::signedRightShift(x, y)	`x >> y`	The Signed Right Shift Operator (`>>`)	*T*
T::unsignedRightShift(x, y)	`x >>> y`	The Unsigned Right Shift Operator (`>>>`)	*T*, may throw **TypeError**

T::lessThan(x, y)	`x < y`
	`x > y`
	`x <= y`
	`x >= y`
		Relational Operators, via Abstract Relational Comparison	Boolean or **undefined** (for unordered inputs)

T::equal(x, y)	`x == y`
	`x != y`
	`x === y`
	`x !== y`
		Equality Operators, via Strict Equality Comparison	Boolean

T::sameValue(x, y)		Object internal methods, via SameValue (*x*, *y*), to test exact value equality	Boolean
T::sameValueZero(x, y)		Array, Map, and Set methods, via SameValueZero (*x*, *y*), to test value equality ignoring differences among members of the zero cohort (e.g., **-0** and **+0**)	Boolean
T::bitwiseAND(x, y)	`x & y`	Binary Bitwise Operators	*T*
T::bitwiseXOR(x, y)	`x ^ y`	Binary Bitwise Operators	*T*
T::bitwiseOR(x, y)	`x | y`	Binary Bitwise Operators	*T*

T::toString(x)	**`String(x)`**	Many expressions and built-in functions, via ToString (*argument*)	String

The *T*::unit value and *T*::*op* operations are not a part of the ECMAScript language; they are defined here solely to aid the specification of the semantics of the ECMAScript language. Other abstract operations are defined throughout this specification.

Because the numeric types are in general not convertible without loss of precision or truncation, the ECMAScript language provides no implicit conversion among these types. Programmers must explicitly call **`Number`** and **`BigInt`** functions to convert among types when calling a function which requires another type.

> NOTE The first and subsequent editions of ECMAScript have provided, for certain operators, implicit numeric conversions that could lose precision or truncate. These legacy implicit conversions are maintained for backward compatibility, but not provided for BigInt in order to minimize opportunity for programmer error, and to leave open the option of generalized *value types* in a future edition.

6.1.6.1 The Number Type

The Number type has exactly $18437736874454810627_{\mathbb{R}}$ (that is, ${2_{\mathbb{R}}}^{64_{\mathbb{R}}} - {2_{\mathbb{R}}}^{53_{\mathbb{R}}} + 3_{\mathbb{R}}$) values, representing the double-precision 64-bit format IEEE 754-2019 values as specified in the IEEE Standard for Binary Floating-Point Arithmetic, except that the $9007199254740990_{\mathbb{R}}$ (that is, ${2_{\mathbb{R}}}^{53_{\mathbb{R}}} - 2_{\mathbb{R}}$) distinct "Not-a-Number" values of the IEEE Standard are represented in ECMAScript as a single special **NaN** value. (Note that the **NaN** value is produced by the program expression **`NaN`**.) In some implementations, external code might be able to detect a difference between various Not-a-Number values, but such behaviour is implementation-dependent; to ECMAScript code, all **NaN** values are indistinguishable from each other.

> NOTE The bit pattern that might be observed in an ArrayBuffer (see 24.1) or a SharedArrayBuffer (see 24.2) after a Number value has been stored into it is not necessarily the same as the internal representation of that Number value used by the ECMAScript implementation.

There are two other special values, called **positive Infinity** and **negative Infinity**. For brevity, these values are also referred to for expository purposes by the symbols +∞ and -∞, respectively. (Note that these two infinite Number values are produced by the program expressions **`+Infinity`** (or simply **`Infinity`**) and **`-Infinity`**.)

The other $18437736874454810624_{\mathbb{R}}$ (that is, ${2_{\mathbb{R}}}^{64_{\mathbb{R}}} - {2_{\mathbb{R}}}^{53_{\mathbb{R}}}$) values are called the finite numbers. Half of these are positive numbers and half are negative numbers; for every finite positive Number value there is a corresponding negative value having the same magnitude.

Note that there is both a **positive zero** and a **negative zero**. For brevity, these values are also referred to for expository purposes by the symbols **+0** and **-0**, respectively. (Note that these two different zero Number values are produced by the program expressions **`+0`** (or simply **`0`**) and **`-0`**.)

The $18437736874454810622_{\mathbb{R}}$ (that is, ${2_{\mathbb{R}}}^{64_{\mathbb{R}}} - {2_{\mathbb{R}}}^{53_{\mathbb{R}}} - 2_{\mathbb{R}}$) finite nonzero values are of two kinds:

$18428729675200069632_{\mathbb{R}}$ (that is, $2_{\mathbb{R}}^{64_{\mathbb{R}}} - 2_{\mathbb{R}}^{54_{\mathbb{R}}}$) of them are normalized, having the form

$s \times m \times 2^e$

where s is $+1_{\mathbb{R}}$ or $-1_{\mathbb{R}}$, m is a positive mathematical integer less than $2_{\mathbb{R}}^{53_{\mathbb{R}}}$ but not less than $2_{\mathbb{R}}^{52_{\mathbb{R}}}$, and e is a mathematical integer ranging from $-1074_{\mathbb{R}}$ to $971_{\mathbb{R}}$, inclusive.

The remaining $9007199254740990_{\mathbb{R}}$ (that is, $2_{\mathbb{R}}^{53_{\mathbb{R}}} - 2_{\mathbb{R}}$) values are denormalized, having the form

$s \times m \times 2^e$

where s is $+1_{\mathbb{R}}$ or $-1_{\mathbb{R}}$, m is a positive mathematical integer less than $2_{\mathbb{R}}^{52_{\mathbb{R}}}$, and e is $-1074_{\mathbb{R}}$.

Note that all the positive and negative mathematical integers whose magnitude is no greater than 2^{53} are representable in the Number type (indeed, the mathematical integer 0 has two representations, **+0** and **-0**).

A finite number has an *odd significand* if it is nonzero and the mathematical integer m used to express it (in one of the two forms shown above) is odd. Otherwise, it has an *even significand*.

In this specification, the phrase "the *Number value* for x" where x represents an exact real mathematical quantity (which might even be an irrational number such as π) means a Number value chosen in the following manner. Consider the set of all finite values of the Number type, with **-0** removed and with two additional values added to it that are not representable in the Number type, namely $2_{\mathbb{R}}^{1024_{\mathbb{R}}}$ (which is $+1_{\mathbb{R}} \times 2_{\mathbb{R}}^{53_{\mathbb{R}}} \times 2_{\mathbb{R}}^{971_{\mathbb{R}}}$) and $-2_{\mathbb{R}}^{1024_{\mathbb{R}}}$ (which is $-1_{\mathbb{R}} \times 2_{\mathbb{R}}^{53_{\mathbb{R}}} \times 2_{\mathbb{R}}^{971_{\mathbb{R}}}$). Choose the member of this set that is closest in value to x. If two values of the set are equally close, then the one with an even significand is chosen; for this purpose, the two extra values $2_{\mathbb{R}}^{1024_{\mathbb{R}}}$ and $-2_{\mathbb{R}}^{1024_{\mathbb{R}}}$ are considered to have even significands. Finally, if $2_{\mathbb{R}}^{1024_{\mathbb{R}}}$ was chosen, replace it with $+\infty$; if $-2_{\mathbb{R}}^{1024_{\mathbb{R}}}$ was chosen, replace it with $-\infty$; if **+0** was chosen, replace it with **-0** if and only if x is less than zero; any other chosen value is used unchanged. The result is the Number value for x. (This procedure corresponds exactly to the behaviour of the IEEE 754-2019 roundTiesToEven mode.)

Some ECMAScript operators deal only with integers in specific ranges such as -2^{31} through $2^{31} - 1$, inclusive, or in the range 0 through $2^{16} - 1$, inclusive. These operators accept any value of the Number type but first convert each such value to an integer value in the expected range. See the descriptions of the numeric conversion operations in 7.1.

The Number::unit value is **1**.

6.1.6.1.1 Number::unaryMinus (*x*)

1. If x is **NaN**, return **NaN**.
2. Return the result of negating x; that is, compute a Number with the same magnitude but opposite sign.

6.1.6.1.2 Number::bitwiseNOT (*x*)

1. Let *oldValue* be ! ToInt32(x).
2. Return the result of applying bitwise complement to *oldValue*. The result is a signed 32-bit integer.

6.1.6.1.3 Number::exponentiate (*base*, *exponent*)

Returns an implementation-dependent approximation of the result of raising *base* to the power *exponent*.

- If *exponent* is **NaN**, the result is **NaN**.
- If *exponent* is **+0**, the result is 1, even if *base* is **NaN**.
- If *exponent* is **-0**, the result is 1, even if *base* is **NaN**.
- If *base* is **NaN** and *exponent* is nonzero, the result is **NaN**.
- If abs(*base*) > 1 and *exponent* is +∞, the result is +∞.
- If abs(*base*) > 1 and *exponent* is -∞, the result is **+0**.
- If abs(*base*) is 1 and *exponent* is +∞, the result is **NaN**.
- If abs(*base*) is 1 and *exponent* is -∞, the result is **NaN**.
- If abs(*base*) < 1 and *exponent* is +∞, the result is **+0**.
- If abs(*base*) < 1 and *exponent* is -∞, the result is +∞.
- If *base* is +∞ and *exponent* > 0, the result is +∞.
- If *base* is +∞ and *exponent* < 0, the result is **+0**.
- If *base* is -∞ and *exponent* > 0 and *exponent* is an odd integer, the result is -∞.
- If *base* is -∞ and *exponent* > 0 and *exponent* is not an odd integer, the result is +∞.
- If *base* is -∞ and *exponent* < 0 and *exponent* is an odd integer, the result is **-0**.
- If *base* is -∞ and *exponent* < 0 and *exponent* is not an odd integer, the result is **+0**.
- If *base* is **+0** and *exponent* > 0, the result is **+0**.
- If *base* is **+0** and *exponent* < 0, the result is +∞.
- If *base* is **-0** and *exponent* > 0 and *exponent* is an odd integer, the result is **-0**.
- If *base* is **-0** and *exponent* > 0 and *exponent* is not an odd integer, the result is **+0**.
- If *base* is **-0** and *exponent* < 0 and *exponent* is an odd integer, the result is -∞.
- If *base* is **-0** and *exponent* < 0 and *exponent* is not an odd integer, the result is +∞.
- If *base* < 0 and *base* is finite and *exponent* is finite and *exponent* is not an integer, the result is **NaN**.

NOTE The result of *base* ****** *exponent* when *base* is **1** or **-1** and *exponent* is **+Infinity** or **-Infinity** differs from IEEE 754-2019. The first edition of ECMAScript specified a result of **NaN** for this operation, whereas later versions of IEEE 754-2019 specified **1**. The historical ECMAScript behaviour is preserved for compatibility reasons.

6.1.6.1.4 Number::multiply (*x*, *y*)

The ***** *MultiplicativeOperator* performs multiplication, producing the product of *x* and *y*. Multiplication is commutative. Multiplication is not always associative in ECMAScript, because of finite precision.

The result of a floating-point multiplication is governed by the rules of IEEE 754-2019 binary double-precision arithmetic:

- If either operand is **NaN**, the result is **NaN**.
- The sign of the result is positive if both operands have the same sign, negative if the operands have different signs.
- Multiplication of an infinity by a zero results in **NaN**.
- Multiplication of an infinity by an infinity results in an infinity. The sign is determined by the rule already stated above.
- Multiplication of an infinity by a finite nonzero value results in a signed infinity. The sign is determined by the rule already stated above.
- In the remaining cases, where neither an infinity nor **NaN** is involved, the product is computed and rounded to the nearest representable value using IEEE 754-2019 roundTiesToEven mode. If the magnitude is too large to represent, the result is then an infinity of appropriate sign. If the magnitude is too small to represent, the result

is then a zero of appropriate sign. The ECMAScript language requires support of gradual underflow as defined by IEEE 754-2019.

6.1.6.1.5 Number::divide (*x*, *y*)

The **/** *MultiplicativeOperator* performs division, producing the quotient of *x* and *y*. *x* is the dividend and *y* is the divisor. ECMAScript does not perform integer division. The operands and result of all division operations are double-precision floating-point numbers. The result of division is determined by the specification of IEEE 754-2019 arithmetic:

- If either operand is **NaN**, the result is **NaN**.
- The sign of the result is positive if both operands have the same sign, negative if the operands have different signs.
- Division of an infinity by an infinity results in **NaN**.
- Division of an infinity by a zero results in an infinity. The sign is determined by the rule already stated above.
- Division of an infinity by a nonzero finite value results in a signed infinity. The sign is determined by the rule already stated above.
- Division of a finite value by an infinity results in zero. The sign is determined by the rule already stated above.
- Division of a zero by a zero results in **NaN**; division of zero by any other finite value results in zero, with the sign determined by the rule already stated above.
- Division of a nonzero finite value by a zero results in a signed infinity. The sign is determined by the rule already stated above.
- In the remaining cases, where neither an infinity, nor a zero, nor **NaN** is involved, the quotient is computed and rounded to the nearest representable value using IEEE 754-2019 roundTiesToEven mode. If the magnitude is too large to represent, the operation overflows; the result is then an infinity of appropriate sign. If the magnitude is too small to represent, the operation underflows and the result is a zero of the appropriate sign. The ECMAScript language requires support of gradual underflow as defined by IEEE 754-2019.

6.1.6.1.6 Number::remainder (*n*, *d*)

The **%** *MultiplicativeOperator* yields the remainder of its operands from an implied division; *n* is the dividend and *d* is the divisor.

> NOTE In C and C++, the remainder operator accepts only integral operands; in ECMAScript, it also accepts floating-point operands.

The result of a floating-point remainder operation as computed by the **%** operator is not the same as the "remainder" operation defined by IEEE 754-2019. The IEEE 754-2019 "remainder" operation computes the remainder from a rounding division, not a truncating division, and so its behaviour is not analogous to that of the usual integer remainder operator. Instead the ECMAScript language defines **%** on floating-point operations to behave in a manner analogous to that of the Java integer remainder operator; this may be compared with the C library function fmod.

The result of an ECMAScript floating-point remainder operation is determined by the rules of IEEE arithmetic:

- If either operand is **NaN**, the result is **NaN**.
- The sign of the result equals the sign of the dividend.
- If the dividend is an infinity, or the divisor is a zero, or both, the result is **NaN**.
- If the dividend is finite and the divisor is an infinity, the result equals the dividend.
- If the dividend is a zero and the divisor is nonzero and finite, the result is the same as the dividend.
- In the remaining cases, where neither an infinity, nor a zero, nor **NaN** is involved, the floating-point remainder

r from a dividend n and a divisor d is defined by the mathematical relation $r = n - (d \times q)$ where q is an integer that is negative only if n/d is negative and positive only if n/d is positive, and whose magnitude is as large as possible without exceeding the magnitude of the true mathematical quotient of n and d. r is computed and rounded to the nearest representable value using IEEE 754-2019 roundTiesToEven mode.

6.1.6.1.7 Number::add (*x*, *y*)

The **+** operator performs addition when applied to *x* and *y*, producing the sum of the operands.

Addition is a commutative operation, but not always associative.

The result of an addition is determined using the rules of IEEE 754-2019 binary double-precision arithmetic:

- If either operand is **NaN**, the result is **NaN**.
- The sum of two infinities of opposite sign is **NaN**.
- The sum of two infinities of the same sign is the infinity of that sign.
- The sum of an infinity and a finite value is equal to the infinite operand.
- The sum of two negative zeroes is **-0**. The sum of two positive zeroes, or of two zeroes of opposite sign, is **+0**.
- The sum of a zero and a nonzero finite value is equal to the nonzero operand.
- The sum of two nonzero finite values of the same magnitude and opposite sign is **+0**.
- In the remaining cases, where neither an infinity, nor a zero, nor **NaN** is involved, and the operands have the same sign or have different magnitudes, the sum is computed and rounded to the nearest representable value using IEEE 754-2019 roundTiesToEven mode. If the magnitude is too large to represent, the operation overflows and the result is then an infinity of appropriate sign. The ECMAScript language requires support of gradual underflow as defined by IEEE 754-2019.

6.1.6.1.8 Number::subtract (*x*, *y*)

The **-** operator performs subtraction when applied to two operands of numeric type, producing the difference of its operands; *x* is the minuend and *y* is the subtrahend. It is always the case that **`x - y`** produces the same result as **`x + (-y)`**.

The result of **-** operator is then $x + (-y)$.

6.1.6.1.9 Number::leftShift (*x*, *y*)

1. Let *lnum* be ! ToInt32(*x*).
2. Let *rnum* be ! ToUint32(*y*).
3. Let *shiftCount* be the result of masking out all but the least significant 5 bits of *rnum*, that is, compute *rnum* & 0x1F.
4. Return the result of left shifting *lnum* by *shiftCount* bits. The result is a signed 32-bit integer.

6.1.6.1.10 Number::signedRightShift (*x*, *y*)

1. Let *lnum* be ! ToInt32(*x*).
2. Let *rnum* be ! ToUint32(*y*).
3. Let *shiftCount* be the result of masking out all but the least significant 5 bits of *rnum*, that is, compute *rnum* & 0x1F.
4. Return the result of performing a sign-extending right shift of *lnum* by *shiftCount* bits. The most significant bit is propagated. The result is a signed 32-bit integer.

6.1.6.1.11 Number::unsignedRightShift (*x*, *y*)

1. Let *lnum* be ! ToUint32(*x*).
2. Let *rnum* be ! ToUint32(*y*).
3. Let *shiftCount* be the result of masking out all but the least significant 5 bits of *rnum*, that is, compute *rnum* & 0x1F.
4. Return the result of performing a zero-filling right shift of *lnum* by *shiftCount* bits. Vacated bits are filled with zero. The result is an unsigned 32-bit integer.

6.1.6.1.12 Number::lessThan (*x*, *y*)

1. If *x* is **NaN**, return **undefined**.
2. If *y* is **NaN**, return **undefined**.
3. If *x* and *y* are the same Number value, return **false**.
4. If *x* is **+0** and *y* is **-0**, return **false**.
5. If *x* is **-0** and *y* is **+0**, return **false**.
6. If *x* is +∞, return **false**.
7. If *y* is +∞, return **true**.
8. If *y* is -∞, return **false**.
9. If *x* is -∞, return **true**.
10. If the mathematical value of *x* is less than the mathematical value of *y*—note that these mathematical values are both finite and not both zero—return **true**. Otherwise, return **false**.

6.1.6.1.13 Number::equal (*x*, *y*)

1. If *x* is **NaN**, return **false**.
2. If *y* is **NaN**, return **false**.
3. If *x* is the same Number value as *y*, return **true**.
4. If *x* is **+0** and *y* is **-0**, return **true**.
5. If *x* is **-0** and *y* is **+0**, return **true**.
6. Return **false**.

6.1.6.1.14 Number::sameValue (*x*, *y*)

1. If *x* is **NaN** and *y* is **NaN**, return **true**.
2. If *x* is **+0** and *y* is **-0**, return **false**.
3. If *x* is **-0** and *y* is **+0**, return **false**.
4. If *x* is the same Number value as *y*, return **true**.
5. Return **false**.

6.1.6.1.15 Number::sameValueZero (*x*, *y*)

1. If *x* is **NaN** and *y* is **NaN**, return **true**.
2. If *x* is **+0** and *y* is **-0**, return **true**.
3. If *x* is **-0** and *y* is **+0**, return **true**.
4. If *x* is the same Number value as *y*, return **true**.
5. Return **false**.

6.1.6.1.16 NumberBitwiseOp (*op*, *x*, *y*)

1. Let *lnum* be ! ToInt32(*x*).
2. Let *rnum* be ! ToInt32(*y*).
3. Return the result of applying the bitwise operator *op* to *lnum* and *rnum*. The result is a signed 32-bit integer.

6.1.6.1.17 Number::bitwiseAND (*x*, *y*)

1. Return NumberBitwiseOp(**&**, *x*, *y*).

6.1.6.1.18 Number::bitwiseXOR (*x*, *y*)

1. Return NumberBitwiseOp(**^**, *x*, *y*).

6.1.6.1.19 Number::bitwiseOR (*x*, *y*)

1. Return NumberBitwiseOp(**|**, *x*, *y*).

6.1.6.1.20 Number::toString (*x*)

The abstract operation Number::toString converts a Number *x* to String format as follows:

1. If *x* is **NaN**, return the String **"NaN"**.
2. If *x* is **+0** or **-0**, return the String **"0"**.
3. If *x* is less than zero, return the string-concatenation of **"-"** and ! Number::toString(-*x*).
4. If *x* is +∞, return the String **"Infinity"**.
5. Otherwise, let *n*, *k*, and *s* be integers such that $k \geq 1$, $10^{k-1} \leq s < 10^k$, the Number value for $\mathbb{R}(s) \times 10_{\mathbb{R}}^{\mathbb{R}(n) - \mathbb{R}(k)}$ is *x*, and *k* is as small as possible. Note that *k* is the number of digits in the decimal representation of *s*, that *s* is not divisible by $10_{\mathbb{R}}$, and that the least significant digit of *s* is not necessarily uniquely determined by these criteria.
6. If $k \leq n \leq 21$, return the string-concatenation of:
   - the code units of the *k* digits of the decimal representation of *s* (in order, with no leading zeroes)
   - *n* - *k* occurrences of the code unit 0x0030 (DIGIT ZERO)
7. If $0 < n \leq 21$, return the string-concatenation of:
   - the code units of the most significant *n* digits of the decimal representation of *s*
   - the code unit 0x002E (FULL STOP)
   - the code units of the remaining *k* - *n* digits of the decimal representation of *s*
8. If $-6 < n \leq 0$, return the string-concatenation of:
   - the code unit 0x0030 (DIGIT ZERO)
   - the code unit 0x002E (FULL STOP)
   - -*n* occurrences of the code unit 0x0030 (DIGIT ZERO)
   - the code units of the *k* digits of the decimal representation of *s*
9. Otherwise, if $k = 1$, return the string-concatenation of:
   - the code unit of the single digit of *s*
   - the code unit 0x0065 (LATIN SMALL LETTER E)
   - the code unit 0x002B (PLUS SIGN) or the code unit 0x002D (HYPHEN-MINUS) according to whether *n* - 1 is positive or negative
   - the code units of the decimal representation of the integer abs(*n* - 1) (with no leading zeroes)
10. Return the string-concatenation of:
    - the code units of the most significant digit of the decimal representation of *s*
    - the code unit 0x002E (FULL STOP)
    - the code units of the remaining *k* - 1 digits of the decimal representation of *s*

- the code unit 0x0065 (LATIN SMALL LETTER E)
- the code unit 0x002B (PLUS SIGN) or the code unit 0x002D (HYPHEN-MINUS) according to whether n - 1 is positive or negative
- the code units of the decimal representation of the integer abs(n - 1) (with no leading zeroes)

NOTE 1 The following observations may be useful as guidelines for implementations, but are not part of the normative requirements of this Standard:

- If x is any Number value other than **-0**, then ToNumber(ToString(x)) is exactly the same Number value as x.
- The least significant digit of s is not always uniquely determined by the requirements listed in step 5.

NOTE 2 For implementations that provide more accurate conversions than required by the rules above, it is recommended that the following alternative version of step 5 be used as a guideline:

5. Otherwise, let n, k, and s be integers such that $k \geq 1$, $10^{k-1} \leq s < 10^k$, the Number value for $\mathbb{R}(s) \times 10_{\mathbb{R}}^{\mathbb{R}(n) - \mathbb{R}(k)}$ is x, and k is as small as possible. If there are multiple possibilities for s, choose the value of s for which $\mathbb{R}(s) \times 10_{\mathbb{R}}^{\mathbb{R}(n) - \mathbb{R}(k)}$ is closest in value to $\mathbb{R}(x)$. If there are two such possible values of s, choose the one that is even. Note that k is the number of digits in the decimal representation of s and that s is not divisible by $10_{\mathbb{R}}$.

NOTE 3 Implementers of ECMAScript may find useful the paper and code written by David M. Gay for binary-to-decimal conversion of floating-point numbers:

Gay, David M. Correctly Rounded Binary-Decimal and Decimal-Binary Conversions. Numerical Analysis, Manuscript 90-10. AT&T Bell Laboratories (Murray Hill, New Jersey). November 30, 1990. Available as http://ampl.com/REFS/abstracts.html#rounding. Associated code available as http://netlib.sandia.gov/fp/dtoa.c and as http://netlib.sandia.gov/fp/g_fmt.c and may also be found at the various **`netlib`** mirror sites.

6.1.6.2 The BigInt Type

The BigInt type represents a mathematical integer value. The value may be any size and is not limited to a particular bit-width. Generally, where not otherwise noted, operations are designed to return exact mathematically-based answers. For binary operations, BigInts act as two's complement binary strings, with negative numbers treated as having bits set infinitely to the left.

The BigInt::unit value is **1n**.

6.1.6.2.1 BigInt::unaryMinus (x)

1. If x is **0n**, return **0n**.
2. Return the BigInt value that represents the mathematical value of negating x.

6.1.6.2.2 BigInt::bitwiseNOT (*x*)

The abstract operation BigInt::bitwiseNOT with an argument *x* of type BigInt returns the one's complement of *x*; that is, -*x* - 1.

6.1.6.2.3 BigInt::exponentiate (*base*, *exponent*)

1. If *exponent* < **0n**, throw a **RangeError** exception.
2. If *base* is **0n** and *exponent* is **0n**, return **1n**.
3. Return the BigInt value that represents the mathematical value of *base* raised to the power *exponent*.

6.1.6.2.4 BigInt::multiply (*x*, *y*)

The abstract operation BigInt::multiply with two arguments *x* and *y* of type BigInt returns the BigInt value that represents the result of multiplying *x* and *y*.

> NOTE Even if the result has a much larger bit width than the input, the exact mathematical answer is given.

6.1.6.2.5 BigInt::divide (*x*, *y*)

1. If *y* is **0n**, throw a **RangeError** exception.
2. Let *quotient* be the mathematical value of *x* divided by *y*.
3. Return the BigInt value that represents *quotient* rounded towards 0 to the next integral value.

6.1.6.2.6 BigInt::remainder (*n*, *d*)

1. If *d* is **0n**, throw a **RangeError** exception.
2. If *n* is **0n**, return **0n**.
3. Let *r* be the BigInt defined by the mathematical relation $r = n - (d \times q)$ where *q* is a BigInt that is negative only if n/d is negative and positive only if n/d is positive, and whose magnitude is as large as possible without exceeding the magnitude of the true mathematical quotient of *n* and *d*.
4. Return *r*.

> NOTE The sign of the result equals the sign of the dividend.

6.1.6.2.7 BigInt::add (*x*, *y*)

The abstract operation BigInt::add with two arguments *x* and *y* of type BigInt returns the BigInt value that represents the sum of *x* and *y*.

6.1.6.2.8 BigInt::subtract (*x*, *y*)

The abstract operation BigInt::subtract with two arguments *x* and *y* of type BigInt returns the BigInt value that represents the difference *x* minus *y*.

6.1.6.2.9 BigInt::leftShift (*x*, *y*)

The abstract operation BigInt::leftShift with two arguments *x* and *y* of type BigInt performs the following steps:

1. If y < **0n**, then
    a. Return the BigInt value that represents $x \div 2^{-y}$, rounding down to the nearest integer, including for negative numbers.
2. Return the BigInt value that represents $x \times 2^{y}$.

NOTE Semantics here should be equivalent to a bitwise shift, treating the BigInt as an infinite length string of binary two's complement digits.

6.1.6.2.10 BigInt::signedRightShift (*x*, *y*)

The abstract operation BigInt::signedRightShift with arguments x and y of type BigInt performs the following steps:

1. Return BigInt::leftShift(x, -y).

6.1.6.2.11 BigInt::unsignedRightShift (*x*, *y*)

The abstract operation BigInt::unsignedRightShift with two arguments x and y of type BigInt performs the following steps:

1. Throw a **TypeError** exception.

6.1.6.2.12 BigInt::lessThan (*x*, *y*)

The abstract operation BigInt::lessThan with two arguments x and y of type BigInt returns **true** if x is less than y and **false** otherwise.

6.1.6.2.13 BigInt::equal (*x*, *y*)

The abstract operation BigInt::equal with two arguments x and y of type BigInt returns **true** if x and y have the same mathematical integer value and **false** otherwise.

6.1.6.2.14 BigInt::sameValue (*x*, *y*)

The abstract operation BigInt::sameValue with two arguments x and y of type BigInt performs the following steps:

1. Return BigInt::equal(x, y).

6.1.6.2.15 BigInt::sameValueZero (*x*, *y*)

The abstract operation BigInt::sameValueZero with two arguments x and y of type BigInt performs the following steps:

1. Return BigInt::equal(x, y).

6.1.6.2.16 BinaryAnd (*x*, *y*)

1. Assert: x is 0 or 1.
2. Assert: y is 0 or 1.
3. If x is 1 and y is 1, return 1.
4. Else, return 0.

6.1.6.2.17 BinaryOr (*x*, *y*)

1. Assert: *x* is 0 or 1.
2. Assert: *y* is 0 or 1.
3. If *x* is 1 or *y* is 1, return 1.
4. Else, return 0.

6.1.6.2.18 BinaryXor (*x*, *y*)

1. Assert: *x* is 0 or 1.
2. Assert: *y* is 0 or 1.
3. If *x* is 1 and *y* is 0, return 1.
4. Else if *x* is 0 and *y* is 1, return 1.
5. Else, return 0.

6.1.6.2.19 BigIntBitwiseOp (*op*, *x*, *y*)

1. Assert: *op* is **"&"**, **"|"**, or **"^"**.
2. Let *result* be **0n**.
3. Let *shift* be 0.
4. Repeat, until (*x* = 0 or *x* = -1) and (*y* = 0 or *y* = -1),
   a. Let *xDigit* be *x* modulo 2.
   b. Let *yDigit* be *y* modulo 2.
   c. If *op* is **"&"**, set *result* to *result* + 2^{shift} × BinaryAnd(*xDigit*, *yDigit*).
   d. Else if *op* is **"|"**, set *result* to *result* + 2^{shift} × BinaryOr(*xDigit*, *yDigit*).
   e. Else,
      i. Assert: *op* is **"^"**.
      ii. Set *result* to *result* + 2^{shift} × BinaryXor(*xDigit*, *yDigit*).
   f. Set *shift* to *shift* + 1.
   g. Set *x* to (*x* - *xDigit*) / 2.
   h. Set *y* to (*y* - *yDigit*) / 2.
5. If *op* is **"&"**, let *tmp* be BinaryAnd(*x* modulo 2, *y* modulo 2).
6. Else if *op* is **"|"**, let *tmp* be BinaryOr(*x* modulo 2, *y* modulo 2).
7. Else,
   a. Assert: *op* is **"^"**.
   b. Let *tmp* be BinaryXor(*x* modulo 2, *y* modulo 2).
8. If *tmp* ≠ 0, then
   a. Set *result* to *result* - 2^{shift}.
   b. NOTE: This extends the sign.
9. Return *result*.

6.1.6.2.20 BigInt::bitwiseAND (*x*, *y*)

1. Return BigIntBitwiseOp(**"&"**, *x*, *y*).

6.1.6.2.21 BigInt::bitwiseXOR (*x*, *y*)

1. Return BigIntBitwiseOp(**"^"**, *x*, *y*).

6.1.6.2.22 BigInt::bitwiseOR (*x*, *y*)

1. Return BigIntBitwiseOp("|", *x*, *y*).

6.1.6.2.23 BigInt::toString (*x*)

The abstract operation BigInt::toString converts a BigInt *x* to String format as follows:

1. If *x* is less than zero, return the string-concatenation of the String **"-"** and ! BigInt::toString(-*x*).
2. Return the String value consisting of the code units of the digits of the decimal representation of *x*.

6.1.7 The Object Type

An Object is logically a collection of properties. Each property is either a data property, or an accessor property:

- A *data property* associates a key value with an ECMAScript language value and a set of Boolean attributes.
- An *accessor property* associates a key value with one or two accessor functions, and a set of Boolean attributes. The accessor functions are used to store or retrieve an ECMAScript language value that is associated with the property.

Properties are identified using key values. A property key value is either an ECMAScript String value or a Symbol value. All String and Symbol values, including the empty String, are valid as property keys. A *property name* is a property key that is a String value.

An *integer index* is a String-valued property key that is a canonical numeric String (see 7.1.21) and whose numeric value is either **+0** or a positive integer $\leq 2^{53} - 1$. An *array index* is an integer index whose numeric value *i* is in the range $+0 \leq i < 2^{32} - 1$.

Property keys are used to access properties and their values. There are two kinds of access for properties: *get* and *set*, corresponding to value retrieval and assignment, respectively. The properties accessible via get and set access includes both *own properties* that are a direct part of an object and *inherited properties* which are provided by another associated object via a property inheritance relationship. Inherited properties may be either own or inherited properties of the associated object. Each own property of an object must each have a key value that is distinct from the key values of the other own properties of that object.

All objects are logically collections of properties, but there are multiple forms of objects that differ in their semantics for accessing and manipulating their properties. Please see 6.1.7.2 for definitions of the multiple forms of objects.

6.1.7.1 Property Attributes

Attributes are used in this specification to define and explain the state of Object properties. A data property associates a key value with the attributes listed in Table 3.

Table 3: Attributes of a Data Property

Attribute Name	Value Domain	Description
[[Value]]	Any ECMAScript language type	The value retrieved by a get access of the property.
[[Writable]]	Boolean	If **false**, attempts by ECMAScript code to change the property's [[Value]] attribute using [[Set]] will not succeed.
[[Enumerable]]	Boolean	If **true**, the property will be enumerated by a for-in enumeration (see 13.7.5). Otherwise, the property is said to be non-enumerable.
[[Configurable]]	Boolean	If **false**, attempts to delete the property, change the property to be an accessor property, or change its attributes (other than [[Value]], or changing [[Writable]] to **false**) will fail.

An accessor property associates a key value with the attributes listed in Table 4.

Table 4: Attributes of an Accessor Property

Attribute Name	Value Domain	Description
[[Get]]	Object | Undefined	If the value is an Object it must be a function object. The function's [[Call]] internal method (Table 7) is called with an empty arguments list to retrieve the property value each time a get access of the property is performed.
[[Set]]	Object | Undefined	If the value is an Object it must be a function object. The function's [[Call]] internal method (Table 7) is called with an arguments list containing the assigned value as its sole argument each time a set access of the property is performed. The effect of a property's [[Set]] internal method may, but is not required to, have an effect on the value returned by subsequent calls to the property's [[Get]] internal method.
[[Enumerable]]	Boolean	If **true**, the property is to be enumerated by a for-in enumeration (see 13.7.5). Otherwise, the property is said to be non-enumerable.
[[Configurable]]	Boolean	If **false**, attempts to delete the property, change the property to be a data property, or change its attributes will fail.

If the initial values of a property's attributes are not explicitly specified by this specification, the default value defined in Table 5 is used.

Table 5: Default Attribute Values

Attribute Name	Default Value
[[Value]]	**undefined**
[[Get]]	**undefined**
[[Set]]	**undefined**
[[Writable]]	**false**
[[Enumerable]]	**false**
[[Configurable]]	**false**

6.1.7.2 Object Internal Methods and Internal Slots

The actual semantics of objects, in ECMAScript, are specified via algorithms called *internal methods*. Each object in an ECMAScript engine is associated with a set of internal methods that defines its runtime behaviour. These internal methods are not part of the ECMAScript language. They are defined by this specification purely for expository purposes. However, each object within an implementation of ECMAScript must behave as specified by the internal methods associated with it. The exact manner in which this is accomplished is determined by the implementation.

Internal method names are polymorphic. This means that different object values may perform different algorithms when a common internal method name is invoked upon them. That actual object upon which an internal method is invoked is the "target" of the invocation. If, at runtime, the implementation of an algorithm attempts to use an internal method of an object that the object does not support, a **TypeError** exception is thrown.

Internal slots correspond to internal state that is associated with objects and used by various ECMAScript specification algorithms. Internal slots are not object properties and they are not inherited. Depending upon the specific internal slot specification, such state may consist of values of any ECMAScript language type or of specific ECMAScript specification type values. Unless explicitly specified otherwise, internal slots are allocated as part of the process of creating an object and may not be dynamically added to an object. Unless specified otherwise, the initial value of an internal slot is the value **undefined**. Various algorithms within this specification create objects that have internal slots. However, the ECMAScript language provides no direct way to associate internal slots with an object.

Internal methods and internal slots are identified within this specification using names enclosed in double square brackets [[ ]].

Table 6 summarizes the *essential internal methods* used by this specification that are applicable to all objects created or manipulated by ECMAScript code. Every object must have algorithms for all of the essential internal methods. However, all objects do not necessarily use the same algorithms for those methods.

An *ordinary object* is an object that satisfies all of the following criteria:

- For the internal methods listed in Table 6, the object use those defined in 9.1.
- If the object has a [[Call]] internal method, it uses the one defined in 9.2.1.
- If the object has a [[Construct]] internal method, it uses the one defined in 9.2.2.

An *exotic object* is an object that is not an ordinary object.

This specification recognizes different kinds of exotic objects by those objects' internal methods. An object that is behaviourally equivalent to a particular kind of exotic object (such as an Array exotic object or a bound function exotic object), but does not have the same collection of internal methods specified for that kind, is not recognized as that kind of exotic object.

The "Signature" column of Table 6 and other similar tables describes the invocation pattern for each internal method. The invocation pattern always includes a parenthesized list of descriptive parameter names. If a parameter name is the same as an ECMAScript type name then the name describes the required type of the parameter value. If an internal method explicitly returns a value, its parameter list is followed by the symbol "→" and the type name of the returned value. The type names used in signatures refer to the types defined in clause 6 augmented by the following additional names. "*any*" means the value may be any ECMAScript language type.

In addition to its parameters, an internal method always has access to the object that is the target of the method invocation.

An internal method implicitly returns a Completion Record, either a normal completion that wraps a value of the return type shown in its invocation pattern, or a throw completion.

Table 6: Essential Internal Methods

Internal Method	Signature	Description
[[GetPrototypeOf]]	( ) → Object | Null	Determine the object that provides inherited properties for this object. A **null** value indicates that there are no inherited properties.
[[SetPrototypeOf]]	(Object | Null) → Boolean	Associate this object with another object that provides inherited properties. Passing **null** indicates that there are no inherited properties. Returns **true** indicating that the operation was completed successfully or **false** indicating that the operation was not successful.
[[IsExtensible]]	( ) → Boolean	Determine whether it is permitted to add additional properties to this object.
[[PreventExtensions]]	( ) → Boolean	Control whether new properties may be added to this object. Returns **true** if the operation was successful or **false** if the operation was unsuccessful.
[[GetOwnProperty]]	(*propertyKey*) → Undefined | Property Descriptor	Return a Property Descriptor for the own property of this object whose key is *propertyKey*, or **undefined** if no such property exists.
[[DefineOwnProperty]]	(*propertyKey*, *PropertyDescriptor*) → Boolean	Create or alter the own property, whose key is *propertyKey*, to have the state described by *PropertyDescriptor*. Return **true** if that property was successfully created/updated or **false** if the property could not be created or updated.
[[HasProperty]]	(*propertyKey*) → Boolean	Return a Boolean value indicating whether this object already has either an own or inherited property whose key is *propertyKey*.
[[Get]]	(*propertyKey*, *Receiver*) → *any*	Return the value of the property whose key is *propertyKey* from this object. If any ECMAScript code must be executed to retrieve the property value, *Receiver* is used as the **this** value when evaluating the code.
[[Set]]	(*propertyKey*, *value*, *Receiver*) → Boolean	Set the value of the property whose key is *propertyKey* to *value*. If any ECMAScript code must be executed to set the property value, *Receiver* is used as the **this** value when evaluating the code. Returns **true** if the property value was set or **false** if it could not be set.
[[Delete]]	(*propertyKey*) → Boolean	Remove the own property whose key is *propertyKey* from this object. Return **false** if the property was not deleted and is still present. Return **true** if the property was deleted or is not present.
[[OwnPropertyKeys]]	( ) → List of propertyKey	Return a List whose elements are all of the own property keys for the object.

Table 7 summarizes additional essential internal methods that are supported by objects that may be called as functions. A *function object* is an object that supports the [[Call]] internal method. A *constructor* is an object that

supports the [[Construct]] internal method. Every object that supports [[Construct]] must support [[Call]]; that is, every constructor must be a function object. Therefore, a constructor may also be referred to as a *constructor function* or *constructor function object*.

Table 7: Additional Essential Internal Methods of Function Objects

Internal Method	Signature	Description
[[Call]]	(*any*, a List of *any*) → *any*	Executes code associated with this object. Invoked via a function call expression. The arguments to the internal method are a **this** value and a list containing the arguments passed to the function by a call expression. Objects that implement this internal method are *callable*.
[[Construct]]	(a List of *any*, Object) → Object	Creates an object. Invoked via the `new` operator or a `super` call. The first argument to the internal method is a list containing the arguments of the constructor invocation or the `super` call. The second argument is the object to which the `new` operator was initially applied. Objects that implement this internal method are called *constructors*. A function object is not necessarily a constructor and such non-constructor function objects do not have a [[Construct]] internal method.

The semantics of the essential internal methods for ordinary objects and standard exotic objects are specified in clause 9. If any specified use of an internal method of an exotic object is not supported by an implementation, that usage must throw a **TypeError** exception when attempted.

6.1.7.3 Invariants of the Essential Internal Methods

The Internal Methods of Objects of an ECMAScript engine must conform to the list of invariants specified below. Ordinary ECMAScript Objects as well as all standard exotic objects in this specification maintain these invariants. ECMAScript Proxy objects maintain these invariants by means of runtime checks on the result of traps invoked on the [[ProxyHandler]] object.

Any implementation provided exotic objects must also maintain these invariants for those objects. Violation of these invariants may cause ECMAScript code to have unpredictable behaviour and create security issues. However, violation of these invariants must never compromise the memory safety of an implementation.

An implementation must not allow these invariants to be circumvented in any manner such as by providing alternative interfaces that implement the functionality of the essential internal methods without enforcing their invariants.

Definitions:

- The *target* of an internal method is the object upon which the internal method is called.
- A target is *non-extensible* if it has been observed to return **false** from its [[IsExtensible]] internal method, or **true** from its [[PreventExtensions]] internal method.
- A *non-existent* property is a property that does not exist as an own property on a non-extensible target.
- All references to *SameValue* are according to the definition of the SameValue algorithm.

Return value:

The value returned by any internal method must be a Completion Record with either:

- [[Type]] = normal, [[Target]] = empty, and [[Value]] = a value of the "normal return type" shown below for that internal method, or
- [[Type]] = throw, [[Target]] = empty, and [[Value]] = any ECMAScript language value.

NOTE 1 An internal method must not return a completion with [[Type]] = continue, break, or return.

[[GetPrototypeOf]] ( )

- The normal return type is either Object or Null.
- If target is non-extensible, and [[GetPrototypeOf]] returns a value *V*, then any future calls to [[GetPrototypeOf]] should return the SameValue as *V*.

NOTE 2 An object's prototype chain should have finite length (that is, starting from any object, recursively applying the [[GetPrototypeOf]] internal method to its result should eventually lead to the value **null**). However, this requirement is not enforceable as an object level invariant if the prototype chain includes any exotic objects that do not use the ordinary object definition of [[GetPrototypeOf]]. Such a circular prototype chain may result in infinite loops when accessing object properties.

[[SetPrototypeOf]] (*V*)

- The normal return type is Boolean.
- If target is non-extensible, [[SetPrototypeOf]] must return **false**, unless *V* is the SameValue as the target's observed [[GetPrototypeOf]] value.

[[IsExtensible]] ( )

- The normal return type is Boolean.
- If [[IsExtensible]] returns **false**, all future calls to [[IsExtensible]] on the target must return **false**.

[[PreventExtensions]] ( )

- The normal return type is Boolean.
- If [[PreventExtensions]] returns **true**, all future calls to [[IsExtensible]] on the target must return **false** and the target is now considered non-extensible.

[[GetOwnProperty]] (*P*)

- The normal return type is either Property Descriptor or Undefined.
- If the Type of the return value is Property Descriptor, the return value must be a complete property descriptor.
- If *P* is described as a non-configurable, non-writable own data property, all future calls to [[GetOwnProperty]] (*P*) must return Property Descritor whose [[Value]] is SameValue as *P*'s [[Value]] attribute.
- If *P*'s attributes other than [[Writable]] may change over time or if the property might be deleted, then *P*'s [[Configurable]] attribute must be **true**.
- If the [[Writable]] attribute may change from **false** to **true**, then the [[Configurable]] attribute must be **true**.
- If the target is non-extensible and *P* is non-existent, then all future calls to [[GetOwnProperty]] (*P*) on the target must describe *P* as non-existent (i.e. [[GetOwnProperty]] (*P*) must return **undefined**).

NOTE 3 As a consequence of the third invariant, if a property is described as a data property and it may return different values over time, then either or both of the [[Writable]] and [[Configurable]] attributes must be **true** even if no mechanism to change the value is exposed via the other essential internal methods.

[[DefineOwnProperty]] (*P*, *Desc*)

- The normal return type is Boolean.
- [[DefineOwnProperty]] must return **false** if *P* has previously been observed as a non-configurable own property of the target, unless either:
  1. *P* is a writable data property. A non-configurable writable data property can be changed into a non-configurable non-writable data property.
  2. All attributes of *Desc* are the SameValue as *P*'s attributes.
- [[DefineOwnProperty]] (*P*, *Desc*) must return **false** if target is non-extensible and *P* is a non-existent own property. That is, a non-extensible target object cannot be extended with new properties.

[[HasProperty]] (*P*)

- The normal return type is Boolean.
- If *P* was previously observed as a non-configurable own data or accessor property of the target, [[HasProperty]] must return **true**.

[[Get]] (*P*, *Receiver*)

- The normal return type is any ECMAScript language type.
- If *P* was previously observed as a non-configurable, non-writable own data property of the target with value *V*, then [[Get]] must return the SameValue as *V*.
- If *P* was previously observed as a non-configurable own accessor property of the target whose [[Get]] attribute is **undefined**, the [[Get]] operation must return **undefined**.

[[Set]] (*P*, *V*, *Receiver*)

- The normal return type is Boolean.
- If *P* was previously observed as a non-configurable, non-writable own data property of the target, then [[Set]] must return **false** unless *V* is the SameValue as *P*'s [[Value]] attribute.
- If *P* was previously observed as a non-configurable own accessor property of the target whose [[Set]] attribute is **undefined**, the [[Set]] operation must return **false**.

[[Delete]] (*P*)

- The normal return type is Boolean.
- If *P* was previously observed as a non-configurable own data or accessor property of the target, [[Delete]] must return **false**.

[[OwnPropertyKeys]] ( )

- The normal return type is List.
- The returned List must not contain any duplicate entries.
- The Type of each element of the returned List is either String or Symbol.
- The returned List must contain at least the keys of all non-configurable own properties that have previously been observed.

- If the object is non-extensible, the returned List must contain only the keys of all own properties of the object that are observable using [[GetOwnProperty]].

[[Call]] ( )

- The normal return type is any ECMAScript language type.

[[Construct]] ( )

- The normal return type is Object.

6.1.7.4 Well-Known Intrinsic Objects

Well-known intrinsics are built-in objects that are explicitly referenced by the algorithms of this specification and which usually have realm-specific identities. Unless otherwise specified each intrinsic object actually corresponds to a set of similar objects, one per realm.

Within this specification a reference such as %name% means the intrinsic object, associated with the current realm, corresponding to the name. A reference such as %name.a.b% means, as if the "b" property of the "a" property of the intrinsic object %name% was accessed prior to any ECMAScript code being evaluated. Determination of the current realm and its intrinsics is described in 8.3. The well-known intrinsics are listed in Table 8.

Table 8: Well-Known Intrinsic Objects

Intrinsic Name	Global Name	ECMAScript Language Association
%Array%	`Array`	The `Array` constructor (22.1.1)
%ArrayBuffer%	`ArrayBuffer`	The `ArrayBuffer` constructor (24.1.2)
%ArrayBufferPrototype%	`ArrayBuffer.prototype`	The initial value of the **"prototype"** data property of %ArrayBuffer%; i.e., %ArrayBuffer.prototype%
%ArrayIteratorPrototype%		The prototype of Array iterator objects (22.1.5); i.e., %ArrayIterator.prototype%
%ArrayPrototype%	`Array.prototype`	The initial value of the **"prototype"** data property of %Array% (22.1.3); i.e. %Array.prototype%
%ArrayProto_entries%	`Array.prototype.entries`	The initial value of the **"entries"** data property of %Array.prototype% (22.1.3.4); i.e., %Array.prototype.entries%
%ArrayProto_forEach%	`Array.prototype.forEach`	The initial value of the **"forEach"** data property of %Array.prototype% (22.1.3.12); i.e., %Array.prototype.forEach%

%ArrayProto_keys%	**`Array.prototype.keys`**	The initial value of the **"keys"** data property of %Array.prototype% (22.1.3.16); i.e., %Array.prototype.keys%
%ArrayProto_values%	**`Array.prototype.values`**	The initial value of the **"values"** data property of %Array.prototype% (22.1.3.32); i.e., %Array.prototype.values%
%AsyncFromSyncIteratorPrototype%		The prototype of async-from-sync iterator objects (25.1.4)
%AsyncFunction%		The constructor of async function objects (25.7.1)
%AsyncFunctionPrototype%		The initial value of the **"prototype"** data property of %AsyncFunction%; i.e., %AsyncFunction.prototype%
%AsyncGenerator%		The initial value of the **"prototype"** property of %AsyncGeneratorFunction%; i.e., %AsyncGeneratorFunction.prototype%
%AsyncGeneratorFunction%		The constructor of async iterator objects (25.3.1)
%AsyncGeneratorPrototype%		The initial value of the **"prototype"** property of %AsyncGenerator%; i.e., %AsyncGenerator.prototype%
%AsyncIteratorPrototype%		An object that all standard built-in async iterator objects indirectly inherit from
%Atomics%	**`Atomics`**	The **`Atomics`** object (24.4)
%BigInt%	**`BigInt`**	The **`BigInt`** constructor (20.2.1)
%BigInt64Array%	**`BigInt64Array`**	The **`BigInt64Array`** constructor (22.2)
%BigUint64Array%	**`BigUint64Array`**	The **`BigUint64Array`** constructor (22.2)
%Boolean%	**`Boolean`**	The **`Boolean`** constructor (19.3.1)
%BooleanPrototype%	**`Boolean.prototype`**	The initial value of the **"prototype"** data property of %Boolean% (19.3.3); i.e., %Boolean.prototype%
%DataView%	**`DataView`**	The **`DataView`** constructor (24.3.2)

%DataViewPrototype%	**`DataView.prototype`**	The initial value of the **"prototype"** data property of %DataView%; i.e., %DataView.prototype%
%Date%	**`Date`**	The **`Date`** constructor (20.4.2)
%DatePrototype%	**`Date.prototype`**	The initial value of the **"prototype"** data property of %Date%.; i.e., %Date.prototype%
%decodeURI%	**`decodeURI`**	The **`decodeURI`** function (18.2.6.2)
%decodeURIComponent%	**`decodeURIComponent`**	The **`decodeURIComponent`** function (18.2.6.3)
%encodeURI%	**`encodeURI`**	The **`encodeURI`** function (18.2.6.4)
%encodeURIComponent%	**`encodeURIComponent`**	The **`encodeURIComponent`** function (18.2.6.5)
%Error%	**`Error`**	The **`Error`** constructor (19.5.1)
%ErrorPrototype%	**`Error.prototype`**	The initial value of the **"prototype"** data property of %Error%; i.e., %Error.prototype%
%eval%	**`eval`**	The **`eval`** function (18.2.1)
%EvalError%	**`EvalError`**	The **`EvalError`** constructor (19.5.5.1
%EvalErrorPrototype%	**`EvalError.prototype`**	The initial value of the **"prototype"** data property of %EvalError%; i.e., %EvalError.prototype%
%Float32Array%	**`Float32Array`**	The **`Float32Array`** constructor (22.2)
%Float32ArrayPrototype%	**`Float32Array.prototype`**	The initial value of the **"prototype"** data property of %Float32Array%; i.e., %Float32Array.prototype%
%Float64Array%	**`Float64Array`**	The **`Float64Array`** constructor (22.2)
%Float64ArrayPrototype%	**`Float64Array.prototype`**	The initial value of the **"prototype"** data property of %Float64Array%; i.e., %Float64Array.prototype%
%ForInIteratorPrototype%		The prototype of For-In iterator object (13.7.5.16)
%Function%	**`Function`**	The **`Function`** constructor (19.2.1)
%FunctionPrototype%	**`Function.prototype`**	The initial value of the **"prototype"**

		data property of %Function%; i.e., %Function.prototype%
%Generator%		The initial value of the **"prototype"** data property of %GeneratorFunction%
%GeneratorFunction%		The constructor of generator objects (25.2.1)
%GeneratorPrototype%		The initial value of the **"prototype"** data property of %Generator%; i.e., %Generator.prototype%
%Int8Array%	**`Int8Array`**	The **`Int8Array`** constructor (22.2)
%Int8ArrayPrototype%	**`Int8Array.prototype`**	The initial value of the **"prototype"** data property of %Int8Array%; i.e., %Int8Array.prototype%
%Int16Array%	**`Int16Array`**	The **`Int16Array`** constructor (22.2)
%Int16ArrayPrototype%	**`Int16Array.prototype`**	The initial value of the **"prototype"** data property of %Int16Array%; i.e., %Int16Array.prototype%
%Int32Array%	**`Int32Array`**	The **`Int32Array`** constructor (22.2)
%Int32ArrayPrototype%	**`Int32Array.prototype`**	The initial value of the **"prototype"** data property of %Int32Array%; i.e., %Int32Array.prototype%
%isFinite%	**`isFinite`**	The **`isFinite`** function (18.2.2)
%isNaN%	**`isNaN`**	The **`isNaN`** function (18.2.3)
%IteratorPrototype%		An object that all standard built-in iterator objects indirectly inherit from
%JSON%	**`JSON`**	The **`JSON`** object (24.5)
%JSONParse%	**`JSON.parse`**	The initial value of the **"parse"** data property of %JSON%; i.e., %JSON.parse%
%JSONStringify%	**`JSON.stringify`**	The initial value of the **"stringify"** data property of %JSON%; i.e., %JSON.stringify%
%Map%	**`Map`**	The **`Map`** constructor (23.1.1)
%MapIteratorPrototype%		The prototype of Map iterator objects (23.1.5)

%MapPrototype%	**`Map.prototype`**	The initial value of the **"prototype"** data property of %Map%; i.e., %Map.prototype%
%Math%	**`Math`**	The **`Math`** object (20.3)
%Number%	**`Number`**	The **`Number`** constructor (20.1.1)
%NumberPrototype%	**`Number.prototype`**	The initial value of the **"prototype"** data property of %Number%; i.e., %Number.prototype%
%Object%	**`Object`**	The **`Object`** constructor (19.1.1)
%ObjectPrototype%	**`Object.prototype`**	The initial value of the **"prototype"** data property of %Object% (19.1.3); i.e %Object.prototype%
%ObjProto_toString%	**`Object.prototype.toString`**	The initial value of the **"toString"** data property of %Object.prototype% (19.1.3.6); i.e., %Object.prototype.toString%
%ObjProto_valueOf%	**`Object.prototype.valueOf`**	The initial value of the **"valueOf"** data property of %Object.prototype% (19.1.3.7); i.e., %Object.prototype.valueOf%
%parseFloat%	**`parseFloat`**	The **`parseFloat`** function (18.2.4)
%parseInt%	**`parseInt`**	The **`parseInt`** function (18.2.5)
%Promise%	**`Promise`**	The **`Promise`** constructor (25.6.3)
%PromisePrototype%	**`Promise.prototype`**	The initial value of the **"prototype"** data property of %Promise%; i.e., %Promise.prototype%
%PromiseProto_then%	**`Promise.prototype.then`**	The initial value of the **"then"** data property of %Promise.prototype% (25.6.5.4); i.e., %Promise.prototype.then%
%Promise_all%	**`Promise.all`**	The initial value of the **"all"** data property of %Promise% (25.6.4.1); i.e., %Promise.all%
%Promise_reject%	**`Promise.reject`**	The initial value of the **"reject"** data property of %Promise% (25.6.4.5); i.e., %Promise.reject%
%Promise_resolve%	**`Promise.resolve`**	The initial value of the **"resolve"** data property of %Promise% (25.6.4.6); i.e.,

		%Promise.resolve%
%Proxy%	**`Proxy`**	The **`Proxy`** constructor (26.2.1)
%RangeError%	**`RangeError`**	The **`RangeError`** constructor (19.5.5.2)
%RangeErrorPrototype%	**`RangeError.prototype`**	The initial value of the **"prototype"** data property of %RangeError%; i.e., %RangeError.prototype%
%ReferenceError%	**`ReferenceError`**	The **`ReferenceError`** constructor (19.5.5.3)
%ReferenceErrorPrototype%	**`ReferenceError.prototype`**	The initial value of the **"prototype"** data property of %ReferenceError%; i.e., %ReferenceError.prototype%
%Reflect%	**`Reflect`**	The **`Reflect`** object (26.1)
%RegExp%	**`RegExp`**	The **`RegExp`** constructor (21.2.3)
%RegExpPrototype%	**`RegExp.prototype`**	The initial value of the **"prototype"** data property of %RegExp%; i.e., %RegExp.prototype%
%RegExpStringIteratorPrototype%		The prototype of RegExp String Iterator objects (21.2.7)
%Set%	**`Set`**	The **`Set`** constructor (23.2.1)
%SetIteratorPrototype%		The prototype of Set iterator objects (23.2.5)
%SetPrototype%	**`Set.prototype`**	The initial value of the **"prototype"** data property of %Set%; i.e., %Set.prototype%
%SharedArrayBuffer%	**`SharedArrayBuffer`**	The **`SharedArrayBuffer`** constructor (24.2.2)
%SharedArrayBufferPrototype%	**`SharedArrayBuffer.prototype`**	The initial value of the **"prototype"** data property of %SharedArrayBuffer%; i.e., %SharedArrayBuffer.prototype%
%String%	**`String`**	The **`String`** constructor (21.1.1)
%StringIteratorPrototype%		The prototype of String iterator objects (21.1.5)
%StringPrototype%	**`String.prototype`**	The initial value of the **"prototype"** data property of %String%; i.e., %String.prototype%

%Symbol%	**`Symbol`**	The **`Symbol`** constructor (19.4.1)
%SymbolPrototype%	**`Symbol.prototype`**	The initial value of the **"prototype"** data property of %Symbol% (19.4.3); i.e., %Symbol.prototype%
%SyntaxError%	**`SyntaxError`**	The **`SyntaxError`** constructor (19.5.5.4)
%SyntaxErrorPrototype%	**`SyntaxError.prototype`**	The initial value of the **"prototype"** data property of %SyntaxError%; i.e., %SyntaxError.prototype%
%ThrowTypeError%		A function object that unconditionally throws a new instance of %TypeError%
%TypedArray%		The super class of all typed Array constructors (22.2.1)
%TypedArrayPrototype%		The initial value of the **"prototype"** data property of %TypedArray%; i.e., %TypedArray.prototype%
%TypeError%	**`TypeError`**	The **`TypeError`** constructor (19.5.5.5
%TypeErrorPrototype%	**`TypeError.prototype`**	The initial value of the **"prototype"** data property of %TypeError%; i.e., %TypeError.prototype%
%Uint8Array%	**`Uint8Array`**	The **`Uint8Array`** constructor (22.2)
%Uint8ArrayPrototype%	**`Uint8Array.prototype`**	The initial value of the **"prototype"** data property of %Uint8Array%; i.e., %Uint8Array.prototype%
%Uint8ClampedArray%	**`Uint8ClampedArray`**	The **`Uint8ClampedArray`** constructor (22.2)
%Uint8ClampedArrayPrototype%	**`Uint8ClampedArray.prototype`**	The initial value of the **"prototype"** data property of %Uint8ClampedArray%; i.e., %Uint8ClampedArray.prototype%
%Uint16Array%	**`Uint16Array`**	The **`Uint16Array`** constructor (22.2
%Uint16ArrayPrototype%	**`Uint16Array.prototype`**	The initial value of the **"prototype"** data property of %Uint16Array%; i.e., %Uint16Array.prototype%
%Uint32Array%	**`Uint32Array`**	The **`Uint32Array`** constructor (22.2
%Uint32ArrayPrototype%	**`Uint32Array.prototype`**	The initial value of the **"prototype"** data property of %Uint32Array%; i.e.,

		%Uint32Array.prototype%
%URIError%	**`URIError`**	The **`URIError`** constructor (19.5.5.6)
%URIErrorPrototype%	**`URIError.prototype`**	The initial value of the **"prototype"** data property of %URIError%; i.e., %URIError.prototype%
%WeakMap%	**`WeakMap`**	The **`WeakMap`** constructor (23.3.1)
%WeakMapPrototype%	**`WeakMap.prototype`**	The initial value of the **"prototype"** data property of %WeakMap%; i.e., %WeakMap.prototype%
%WeakSet%	**`WeakSet`**	The **`WeakSet`** constructor (23.4.1)
%WeakSetPrototype%	**`WeakSet.prototype`**	The initial value of the **"prototype"** data property of %WeakSet%; i.e., %WeakSet.prototype%

6.2 ECMAScript Specification Types

A specification type corresponds to meta-values that are used within algorithms to describe the semantics of ECMAScript language constructs and ECMAScript language types. The specification types include Reference, List, Completion, Property Descriptor, Lexical Environment, Environment Record, Abstract Closure, and Data Block. Specification type values are specification artefacts that do not necessarily correspond to any specific entity within an ECMAScript implementation. Specification type values may be used to describe intermediate results of ECMAScript expression evaluation but such values cannot be stored as properties of objects or values of ECMAScript language variables.

6.2.1 The List and Record Specification Types

The *List* type is used to explain the evaluation of argument lists (see 12.3.8) in **`new`** expressions, in function calls, and in other algorithms where a simple ordered list of values is needed. Values of the List type are simply ordered sequences of list elements containing the individual values. These sequences may be of any length. The elements of a list may be randomly accessed using 0-origin indices. For notational convenience an array-like syntax can be used to access List elements. For example, *arguments*[2] is shorthand for saying the 3rd element of the List *arguments*.

For notational convenience within this specification, a literal syntax can be used to express a new List value. For example, « 1, 2 » defines a List value that has two elements each of which is initialized to a specific value. A new empty List can be expressed as « ».

The *Record* type is used to describe data aggregations within the algorithms of this specification. A Record type value consists of one or more named fields. The value of each field is either an ECMAScript value or an abstract value represented by a name associated with the Record type. Field names are always enclosed in double brackets, for example [[Value]].

For notational convenience within this specification, an object literal-like syntax can be used to express a Record value. For example, { [[Field1]]: 42, [[Field2]]: **false**, [[Field3]]: empty } defines a Record value that has three fields, each of

which is initialized to a specific value. Field name order is not significant. Any fields that are not explicitly listed are considered to be absent.

In specification text and algorithms, dot notation may be used to refer to a specific field of a Record value. For example, if R is the record shown in the previous paragraph then R.[[Field2]] is shorthand for "the field of R named [[Field2]]".

Schema for commonly used Record field combinations may be named, and that name may be used as a prefix to a literal Record value to identify the specific kind of aggregations that is being described. For example: PropertyDescriptor { [[Value]]: 42, [[Writable]]: **false**, [[Configurable]]: **true** }.

6.2.2 The Set and Relation Specification Types

The *Set* type is used to explain a collection of unordered elements for use in the memory model. Values of the Set type are simple collections of elements, where no element appears more than once. Elements may be added to and removed from Sets. Sets may be unioned, intersected, or subtracted from each other.

The *Relation* type is used to explain constraints on Sets. Values of the Relation type are Sets of ordered pairs of values from its value domain. For example, a Relation on events is a set of ordered pairs of events. For a Relation R and two values a and b in the value domain of R, $a\ R\ b$ is shorthand for saying the ordered pair (a, b) is a member of R. A Relation is least with respect to some conditions when it is the smallest Relation that satisfies those conditions.

A *strict partial order* is a Relation value R that satisfies the following.

- For all a, b, and c in R's domain:
  - It is not the case that $a\ R\ a$, and
  - If $a\ R\ b$ and $b\ R\ c$, then $a\ R\ c$.

NOTE 1 The two properties above are called, in order, irreflexivity and transitivity.

A *strict total order* is a Relation value R that satisfies the following.

- For all a, b, and c in R's domain:
  - a is identical to b or $a\ R\ b$ or $b\ R\ a$, and
  - It is not the case that $a\ R\ a$, and
  - If $a\ R\ b$ and $b\ R\ c$, then $a\ R\ c$.

NOTE 2 The three properties above are called, in order, totality, irreflexivity, and transitivity.

6.2.3 The Completion Record Specification Type

The Completion type is a Record used to explain the runtime propagation of values and control flow such as the behaviour of statements (**`break`**, **`continue`**, **`return`** and **`throw`**) that perform nonlocal transfers of control.

Values of the Completion type are Record values whose fields are defined as by Table 9. Such values are referred to as *Completion Record*s.

Table 9: Completion Record Fields

Field Name	Value	Meaning
[[Type]]	One of normal, break, continue, return, or throw	The type of completion that occurred.
[[Value]]	any ECMAScript language value or empty	The value that was produced.
[[Target]]	any ECMAScript string or empty	The target label for directed control transfers.

The term "*abrupt completion*" refers to any completion with a [[Type]] value other than normal.

6.2.3.1 Await

Algorithm steps that say

1. Let *completion* be Await(*value*).

mean the same thing as:

1. Let *asyncContext* be the running execution context.
2. Let *promise* be ? PromiseResolve(%Promise%, *value*).
3. Let *stepsFulfilled* be the algorithm steps defined in Await Fulfilled Functions.
4. Let *onFulfilled* be ! CreateBuiltinFunction(*stepsFulfilled*, « [[AsyncContext]] »).
5. Set *onFulfilled*.[[AsyncContext]] to *asyncContext*.
6. Let *stepsRejected* be the algorithm steps defined in Await Rejected Functions.
7. Let *onRejected* be ! CreateBuiltinFunction(*stepsRejected*, « [[AsyncContext]] »).
8. Set *onRejected*.[[AsyncContext]] to *asyncContext*.
9. Perform ! PerformPromiseThen(*promise*, *onFulfilled*, *onRejected*).
10. Remove *asyncContext* from the execution context stack and restore the execution context that is at the top of the execution context stack as the running execution context.
11. Set the code evaluation state of *asyncContext* such that when evaluation is resumed with a Completion *completion*, the following steps of the algorithm that invoked Await will be performed, with *completion* available.
12. Return.
13. NOTE: This returns to the evaluation of the operation that had most previously resumed evaluation of *asyncContext*.

where all variables in the above steps, with the exception of *completion*, are ephemeral and visible only in the steps pertaining to Await.

NOTE Await can be combined with the **?** and **!** prefixes, so that for example

1. Let *result* be ? Await(*value*).

means the same thing as:

1. Let *result* be Await(*value*).
2. ReturnIfAbrupt(*result*).

6.2.3.1.1 Await Fulfilled Functions

An Await fulfilled function is an anonymous built-in function that is used as part of the Await specification device to deliver the promise fulfillment value to the caller as a normal completion. Each Await fulfilled function has an [[AsyncContext]] internal slot.

When an Await fulfilled function is called with argument *value*, the following steps are taken:

1. Let *F* be the active function object.
2. Let *asyncContext* be *F*.[[AsyncContext]].
3. Let *prevContext* be the running execution context.
4. Suspend *prevContext*.
5. Push *asyncContext* onto the execution context stack; *asyncContext* is now the running execution context.
6. Resume the suspended evaluation of *asyncContext* using NormalCompletion(*value*) as the result of the operation that suspended it.
7. Assert: When we reach this step, *asyncContext* has already been removed from the execution context stack and *prevContext* is the currently running execution context.
8. Return **undefined**.

The **"length"** property of an Await fulfilled function is 1.

6.2.3.1.2 Await Rejected Functions

An Await rejected function is an anonymous built-in function that is used as part of the Await specification device to deliver the promise rejection reason to the caller as an abrupt throw completion. Each Await rejected function has an [[AsyncContext]] internal slot.

When an Await rejected function is called with argument *reason*, the following steps are taken:

1. Let *F* be the active function object.
2. Let *asyncContext* be *F*.[[AsyncContext]].
3. Let *prevContext* be the running execution context.
4. Suspend *prevContext*.
5. Push *asyncContext* onto the execution context stack; *asyncContext* is now the running execution context.
6. Resume the suspended evaluation of *asyncContext* using ThrowCompletion(*reason*) as the result of the operation that suspended it.
7. Assert: When we reach this step, *asyncContext* has already been removed from the execution context stack and *prevContext* is the currently running execution context.
8. Return **undefined**.

The **"length"** property of an Await rejected function is 1.

6.2.3.2 NormalCompletion

The abstract operation NormalCompletion with a single *argument*, such as:

1. Return NormalCompletion(*argument*).

Is a shorthand that is defined as follows:

1. Return Completion { [[Type]]: normal, [[Value]]: *argument*, [[Target]]: empty }.

6.2.3.3 ThrowCompletion

The abstract operation ThrowCompletion with a single *argument*, such as:

1. Return ThrowCompletion(*argument*).

Is a shorthand that is defined as follows:

1. Return Completion { [[Type]]: throw, [[Value]]: *argument*, [[Target]]: empty }.

6.2.3.4 UpdateEmpty (*completionRecord*, *value*)

The abstract operation UpdateEmpty with arguments *completionRecord* and *value* performs the following steps:

1. Assert: If *completionRecord*.[[Type]] is either return or throw, then *completionRecord*.[[Value]] is not empty.
2. If *completionRecord*.[[Value]] is not empty, return Completion(*completionRecord*).
3. Return Completion { [[Type]]: *completionRecord*.[[Type]], [[Value]]: *value*, [[Target]]: *completionRecord*.[[Target]] }.

6.2.4 The Reference Specification Type

NOTE The Reference type is used to explain the behaviour of such operators as **`delete`**, **`typeof`**, the assignment operators, the **`super`** keyword and other language features. For example, the left-hand operand of an assignment is expected to produce a reference.

A *Reference* is a resolved name or property binding. A Reference consists of three components, the base value component, the referenced name component, and the Boolean-valued strict reference flag. The base value component is either **undefined**, an Object, a Boolean, a String, a Symbol, a Number, a BigInt, or an Environment Record. A base value component of **undefined** indicates that the Reference could not be resolved to a binding. The referenced name component is a String or Symbol value.

A *Super Reference* is a Reference that is used to represent a name binding that was expressed using the super keyword. A Super Reference has an additional thisValue component, and its base value component will never be an Environment Record.

The following abstract operations are used in this specification to operate on references:

6.2.4.1 GetBase (*V*)

1. Assert: Type(*V*) is Reference.
2. Return the base value component of *V*.

6.2.4.2 GetReferencedName (*V*)

1. Assert: Type(*V*) is Reference.
2. Return the referenced name component of *V*.

6.2.4.3 IsStrictReference (*V*)

1. Assert: Type(*V*) is Reference.

2. Return the strict reference flag of *V*.

6.2.4.4 HasPrimitiveBase (*V*)

1. Assert: Type(*V*) is Reference.
2. If Type(*V*'s base value component) is Boolean, String, Symbol, BigInt, or Number, return **true**; otherwise return **false**.

6.2.4.5 IsPropertyReference (*V*)

1. Assert: Type(*V*) is Reference.
2. If either the base value component of *V* is an Object or HasPrimitiveBase(*V*) is **true**, return **true**; otherwise return **false**.

6.2.4.6 IsUnresolvableReference (*V*)

1. Assert: Type(*V*) is Reference.
2. If the base value component of *V* is **undefined**, return **true**; otherwise return **false**.

6.2.4.7 IsSuperReference (*V*)

1. Assert: Type(*V*) is Reference.
2. If *V* has a thisValue component, return **true**; otherwise return **false**.

6.2.4.8 GetValue (*V*)

1. ReturnIfAbrupt(*V*).
2. If Type(*V*) is not Reference, return *V*.
3. Let *base* be GetBase(*V*).
4. If IsUnresolvableReference(*V*) is **true**, throw a **ReferenceError** exception.
5. If IsPropertyReference(*V*) is **true**, then
    a. If HasPrimitiveBase(*V*) is **true**, then
        i. Assert: In this case, *base* will never be **undefined** or **null**.
        ii. Set *base* to ! ToObject(*base*).
    b. Return ? *base*.[[Get]](GetReferencedName(*V*), GetThisValue(*V*)).
6. Else,
    a. Assert: *base* is an Environment Record.
    b. Return ? *base*.GetBindingValue(GetReferencedName(*V*), IsStrictReference(*V*)) (see 8.1.1).

NOTE The object that may be created in step 5.a.ii is not accessible outside of the above abstract operation and the ordinary object [[Get]] internal method. An implementation might choose to avoid the actual creation of the object.

6.2.4.9 PutValue (*V*, *W*)

1. ReturnIfAbrupt(*V*).
2. ReturnIfAbrupt(*W*).
3. If Type(*V*) is not Reference, throw a **ReferenceError** exception.

4. Let *base* be GetBase(*V*).
5. If IsUnresolvableReference(*V*) is **true**, then
    a. If IsStrictReference(*V*) is **true**, then
        i. Throw a **ReferenceError** exception.
    b. Let *globalObj* be GetGlobalObject().
    c. Return ? Set(*globalObj*, GetReferencedName(*V*), *W*, **false**).
6. Else if IsPropertyReference(*V*) is **true**, then
    a. If HasPrimitiveBase(*V*) is **true**, then
        i. Assert: In this case, *base* will never be **undefined** or **null**.
        ii. Set *base* to ! ToObject(*base*).
    b. Let *succeeded* be ? *base*.[[Set]](GetReferencedName(*V*), *W*, GetThisValue(*V*)).
    c. If *succeeded* is **false** and IsStrictReference(*V*) is **true**, throw a **TypeError** exception.
    d. Return.
7. Else,
    a. Assert: *base* is an Environment Record.
    b. Return ? *base*.SetMutableBinding(GetReferencedName(*V*), *W*, IsStrictReference(*V*)) (see 8.1.1).

NOTE The object that may be created in step 6.a.ii is not accessible outside of the above algorithm and the ordinary object [[Set]] internal method. An implementation might choose to avoid the actual creation of that object.

6.2.4.10 GetThisValue (*V*)

1. Assert: IsPropertyReference(*V*) is **true**.
2. If IsSuperReference(*V*) is **true**, then
    a. Return the value of the thisValue component of the reference *V*.
3. Return GetBase(*V*).

6.2.4.11 InitializeReferencedBinding (*V*, *W*)

1. ReturnIfAbrupt(*V*).
2. ReturnIfAbrupt(*W*).
3. Assert: Type(*V*) is Reference.
4. Assert: IsUnresolvableReference(*V*) is **false**.
5. Let *base* be GetBase(*V*).
6. Assert: *base* is an Environment Record.
7. Return *base*.InitializeBinding(GetReferencedName(*V*), *W*).

6.2.5 The Property Descriptor Specification Type

The *Property Descriptor* type is used to explain the manipulation and reification of Object property attributes. Values of the Property Descriptor type are Records. Each field's name is an attribute name and its value is a corresponding attribute value as specified in 6.1.7.1. In addition, any field may be present or absent. The schema name used within this specification to tag literal descriptions of Property Descriptor records is “PropertyDescriptor”.

Property Descriptor values may be further classified as data Property Descriptors and accessor Property Descriptors based upon the existence or use of certain fields. A data Property Descriptor is one that includes any fields named

either [[Value]] or [[Writable]]. An accessor Property Descriptor is one that includes any fields named either [[Get]] or [[Set]]. Any Property Descriptor may have fields named [[Enumerable]] and [[Configurable]]. A Property Descriptor value may not be both a data Property Descriptor and an accessor Property Descriptor; however, it may be neither. A generic Property Descriptor is a Property Descriptor value that is neither a data Property Descriptor nor an accessor Property Descriptor. A fully populated Property Descriptor is one that is either an accessor Property Descriptor or a data Property Descriptor and that has all of the fields that correspond to the property attributes defined in either Table 3 or Table 4.

The following abstract operations are used in this specification to operate upon Property Descriptor values:

6.2.5.1 IsAccessorDescriptor (*Desc*)

When the abstract operation IsAccessorDescriptor is called with Property Descriptor *Desc*, the following steps are taken:

1. If *Desc* is **undefined**, return **false**.
2. If both *Desc*.[[Get]] and *Desc*.[[Set]] are absent, return **false**.
3. Return **true**.

6.2.5.2 IsDataDescriptor (*Desc*)

When the abstract operation IsDataDescriptor is called with Property Descriptor *Desc*, the following steps are taken:

1. If *Desc* is **undefined**, return **false**.
2. If both *Desc*.[[Value]] and *Desc*.[[Writable]] are absent, return **false**.
3. Return **true**.

6.2.5.3 IsGenericDescriptor (*Desc*)

When the abstract operation IsGenericDescriptor is called with Property Descriptor *Desc*, the following steps are taken:

1. If *Desc* is **undefined**, return **false**.
2. If IsAccessorDescriptor(*Desc*) and IsDataDescriptor(*Desc*) are both **false**, return **true**.
3. Return **false**.

6.2.5.4 FromPropertyDescriptor (*Desc*)

When the abstract operation FromPropertyDescriptor is called with Property Descriptor *Desc*, the following steps are taken:

1. If *Desc* is **undefined**, return **undefined**.
2. Let *obj* be OrdinaryObjectCreate(%Object.prototype%).
3. Assert: *obj* is an extensible ordinary object with no own properties.
4. If *Desc* has a [[Value]] field, then
    a. Perform ! CreateDataPropertyOrThrow(*obj*, **"value"**, *Desc*.[[Value]]).
5. If *Desc* has a [[Writable]] field, then
    a. Perform ! CreateDataPropertyOrThrow(*obj*, **"writable"**, *Desc*.[[Writable]]).
6. If *Desc* has a [[Get]] field, then
    a. Perform ! CreateDataPropertyOrThrow(*obj*, **"get"**, *Desc*.[[Get]]).

7. If *Desc* has a [[Set]] field, then
    a. Perform ! CreateDataPropertyOrThrow(*obj*, **"set"**, *Desc*.[[Set]]).
8. If *Desc* has an [[Enumerable]] field, then
    a. Perform ! CreateDataPropertyOrThrow(*obj*, **"enumerable"**, *Desc*.[[Enumerable]]).
9. If *Desc* has a [[Configurable]] field, then
    a. Perform ! CreateDataPropertyOrThrow(*obj*, **"configurable"**, *Desc*.[[Configurable]]).
10. Return *obj*.

6.2.5.5 ToPropertyDescriptor (*Obj*)

When the abstract operation ToPropertyDescriptor is called with object *Obj*, the following steps are taken:

1. If Type(*Obj*) is not Object, throw a **TypeError** exception.
2. Let *desc* be a new Property Descriptor that initially has no fields.
3. Let *hasEnumerable* be ? HasProperty(*Obj*, **"enumerable"**).
4. If *hasEnumerable* is **true**, then
    a. Let *enumerable* be ! ToBoolean(? Get(*Obj*, **"enumerable"**)).
    b. Set *desc*.[[Enumerable]] to *enumerable*.
5. Let *hasConfigurable* be ? HasProperty(*Obj*, **"configurable"**).
6. If *hasConfigurable* is **true**, then
    a. Let *configurable* be ! ToBoolean(? Get(*Obj*, **"configurable"**)).
    b. Set *desc*.[[Configurable]] to *configurable*.
7. Let *hasValue* be ? HasProperty(*Obj*, **"value"**).
8. If *hasValue* is **true**, then
    a. Let *value* be ? Get(*Obj*, **"value"**).
    b. Set *desc*.[[Value]] to *value*.
9. Let *hasWritable* be ? HasProperty(*Obj*, **"writable"**).
10. If *hasWritable* is **true**, then
    a. Let *writable* be ! ToBoolean(? Get(*Obj*, **"writable"**)).
    b. Set *desc*.[[Writable]] to *writable*.
11. Let *hasGet* be ? HasProperty(*Obj*, **"get"**).
12. If *hasGet* is **true**, then
    a. Let *getter* be ? Get(*Obj*, **"get"**).
    b. If IsCallable(*getter*) is **false** and *getter* is not **undefined**, throw a **TypeError** exception.
    c. Set *desc*.[[Get]] to *getter*.
13. Let *hasSet* be ? HasProperty(*Obj*, **"set"**).
14. If *hasSet* is **true**, then
    a. Let *setter* be ? Get(*Obj*, **"set"**).
    b. If IsCallable(*setter*) is **false** and *setter* is not **undefined**, throw a **TypeError** exception.
    c. Set *desc*.[[Set]] to *setter*.
15. If *desc*.[[Get]] is present or *desc*.[[Set]] is present, then
    a. If *desc*.[[Value]] is present or *desc*.[[Writable]] is present, throw a **TypeError** exception.
16. Return *desc*.

6.2.5.6 CompletePropertyDescriptor (*Desc*)

When the abstract operation CompletePropertyDescriptor is called with Property Descriptor *Desc*, the following steps are taken:

1. Assert: *Desc* is a Property Descriptor.
2. Let *like* be the Record { [[Value]]: **undefined**, [[Writable]]: **false**, [[Get]]: **undefined**, [[Set]]: **undefined**, [[Enumerable]]: **false**, [[Configurable]]: **false** }.
3. If IsGenericDescriptor(*Desc*) is **true** or IsDataDescriptor(*Desc*) is **true**, then
    a. If *Desc* does not have a [[Value]] field, set *Desc*.[[Value]] to *like*.[[Value]].
    b. If *Desc* does not have a [[Writable]] field, set *Desc*.[[Writable]] to *like*.[[Writable]].
4. Else,
    a. If *Desc* does not have a [[Get]] field, set *Desc*.[[Get]] to *like*.[[Get]].
    b. If *Desc* does not have a [[Set]] field, set *Desc*.[[Set]] to *like*.[[Set]].
5. If *Desc* does not have an [[Enumerable]] field, set *Desc*.[[Enumerable]] to *like*.[[Enumerable]].
6. If *Desc* does not have a [[Configurable]] field, set *Desc*.[[Configurable]] to *like*.[[Configurable]].
7. Return *Desc*.

6.2.6 The Lexical Environment and Environment Record Specification Types

The Lexical Environment and Environment Record types are used to explain the behaviour of name resolution in nested functions and blocks. These types and the operations upon them are defined in 8.1.

6.2.7 The Abstract Closure Specification Type

The *abstract closure* specification type is used to refer to algorithm steps together with a collection of values. Abstract closures are meta-values and are invoked using function application style such as *closure*(*arg1*, *arg2*). Like abstract operations, invocations perform the algorithm steps described by the abstract closure.

In algorithm steps that create an abstract closure, values are captured with the verb "capture" followed by a list of aliases. When an abstract closure is created, it captures the value that is associated with each alias at that time. In steps that specify the algorithm to be performed when an abstract closure is called, each captured value is referred to by the alias that was used to capture the value.

If an abstract closure returns a Completion Record, that Completion Record's [[Type]] must be either normal or throw.

Abstract closures are created inline as part of other algorithms, shown in the following example.

1. Let *addend* be 41.
2. Let *closure* be a new abstract closure with parameters (*x*) that captures *addend* and performs the following steps when called:
    a. Return *x* + *addend*.
3. Let *val* be *closure*(1).
4. Assert: *val* is 42.

6.2.8 Data Blocks

The *Data Block* specification type is used to describe a distinct and mutable sequence of byte-sized (8 bit) numeric values. A Data Block value is created with a fixed number of bytes that each have the initial value 0.

For notational convenience within this specification, an array-like syntax can be used to access the individual bytes of a Data Block value. This notation presents a Data Block value as a 0-origined integer-indexed sequence of bytes. For example, if *db* is a 5 byte Data Block value then *db*[2] can be used to access its 3rd byte.

A data block that resides in memory that can be referenced from multiple agents concurrently is designated a *Shared Data Block*. A Shared Data Block has an identity (for the purposes of equality testing Shared Data Block values) that is *address-free*: it is tied not to the virtual addresses the block is mapped to in any process, but to the set of locations in memory that the block represents. Two data blocks are equal only if the sets of the locations they contain are equal; otherwise, they are not equal and the intersection of the sets of locations they contain is empty. Finally, Shared Data Blocks can be distinguished from Data Blocks.

The semantics of Shared Data Blocks is defined using Shared Data Block events by the memory model. Abstract operations below introduce Shared Data Block events and act as the interface between evaluation semantics and the event semantics of the memory model. The events form a candidate execution, on which the memory model acts as a filter. Please consult the memory model for full semantics.

Shared Data Block events are modeled by Records, defined in the memory model.

The following abstract operations are used in this specification to operate upon Data Block values:

6.2.8.1 CreateByteDataBlock (*size*)

When the abstract operation CreateByteDataBlock is called with integer argument *size*, the following steps are taken:

1. Assert: *size* ≥ 0.
2. Let *db* be a new Data Block value consisting of *size* bytes. If it is impossible to create such a Data Block, throw a **RangeError** exception.
3. Set all of the bytes of *db* to 0.
4. Return *db*.

6.2.8.2 CreateSharedByteDataBlock (*size*)

When the abstract operation CreateSharedByteDataBlock is called with integer argument *size*, the following steps are taken:

1. Assert: *size* ≥ 0.
2. Let *db* be a new Shared Data Block value consisting of *size* bytes. If it is impossible to create such a Shared Data Block, throw a **RangeError** exception.
3. Let *execution* be the [[CandidateExecution]] field of the surrounding agent's Agent Record.
4. Let *eventList* be the [[EventList]] field of the element in *execution*.[[EventsRecords]] whose [[AgentSignifier]] is AgentSignifier().
5. Let *zero* be « 0 ».
6. For each index *i* of *db*, do
    a. Append WriteSharedMemory { [[Order]]: Init, [[NoTear]]: **true**, [[Block]]: *db*, [[ByteIndex]]: *i*, [[ElementSize]]: 1, [[Payload]]: *zero* } to *eventList*.
7. Return *db*.

6.2.8.3 CopyDataBlockBytes (*toBlock*, *toIndex*, *fromBlock*, *fromIndex*, *count*)

When the abstract operation CopyDataBlockBytes is called, the following steps are taken:

1. Assert: *fromBlock* and *toBlock* are distinct Data Block or Shared Data Block values.
2. Assert: *fromIndex*, *toIndex*, and *count* are integer values ≥ 0.
3. Let *fromSize* be the number of bytes in *fromBlock*.

4. Assert: *fromIndex* + *count* ≤ *fromSize*.
5. Let *toSize* be the number of bytes in *toBlock*.
6. Assert: *toIndex* + *count* ≤ *toSize*.
7. Repeat, while *count* > 0
    a. If *fromBlock* is a Shared Data Block, then
        i. Let *execution* be the [[CandidateExecution]] field of the surrounding agent's Agent Record.
        ii. Let *eventList* be the [[EventList]] field of the element in *execution*.[[EventsRecords]] whose [[AgentSignifier]] is AgentSignifier().
        iii. Let *bytes* be a List of length 1 that contains a nondeterministically chosen byte value.
        iv. NOTE: In implementations, *bytes* is the result of a non-atomic read instruction on the underlying hardware. The nondeterminism is a semantic prescription of the memory model to describe observable behaviour of hardware with weak consistency.
        v. Let *readEvent* be ReadSharedMemory { [[Order]]: Unordered, [[NoTear]]: **true**, [[Block]]: *fromBlock*, [[ByteIndex]]: *fromIndex*, [[ElementSize]]: 1 }.
        vi. Append *readEvent* to *eventList*.
        vii. Append Chosen Value Record { [[Event]]: *readEvent*, [[ChosenValue]]: *bytes* } to *execution*.[[ChosenValues]].
        viii. If *toBlock* is a Shared Data Block, then
            1. Append WriteSharedMemory { [[Order]]: Unordered, [[NoTear]]: **true**, [[Block]]: *toBlock*, [[ByteIndex]]: *toIndex*, [[ElementSize]]: 1, [[Payload]]: *bytes* } to *eventList*.
        ix. Else,
            1. Set *toBlock*[*toIndex*] to *bytes*[0].
    b. Else,
        i. Assert: *toBlock* is not a Shared Data Block.
        ii. Set *toBlock*[*toIndex*] to *fromBlock*[*fromIndex*].
    c. Set *toIndex* to *toIndex* + 1.
    d. Set *fromIndex* to *fromIndex* + 1.
    e. Set *count* to *count* - 1.
8. Return NormalCompletion(empty).

7 Abstract Operations

These operations are not a part of the ECMAScript language; they are defined here to solely to aid the specification of the semantics of the ECMAScript language. Other, more specialized abstract operations are defined throughout this specification.

7.1 Type Conversion

The ECMAScript language implicitly performs automatic type conversion as needed. To clarify the semantics of certain constructs it is useful to define a set of conversion abstract operations. The conversion abstract operations are polymorphic; they can accept a value of any ECMAScript language type. But no other specification types are used with these operations.

The BigInt type has no implicit conversions in the ECMAScript language; programmers must call BigInt explicitly to convert values from other types.

7.1.1 ToPrimitive (*input* [, *PreferredType*])

The abstract operation ToPrimitive takes an *input* argument and an optional argument *PreferredType*. The abstract operation ToPrimitive converts its *input* argument to a non-Object type. If an object is capable of converting to more than one primitive type, it may use the optional hint *PreferredType* to favour that type. Conversion occurs according to the following algorithm:

1. Assert: *input* is an ECMAScript language value.
2. If Type(*input*) is Object, then
    a. If *PreferredType* is not present, let *hint* be **"default"**.
    b. Else if *PreferredType* is hint String, let *hint* be **"string"**.
    c. Else,
        i. Assert: *PreferredType* is hint Number.
        ii. Let *hint* be **"number"**.
    d. Let *exoticToPrim* be ? GetMethod(*input*, @@toPrimitive).
    e. If *exoticToPrim* is not **undefined**, then
        i. Let *result* be ? Call(*exoticToPrim*, *input*, « *hint* »).
        ii. If Type(*result*) is not Object, return *result*.
        iii. Throw a **TypeError** exception.
    f. If *hint* is **"default"**, set *hint* to **"number"**.
    g. Return ? OrdinaryToPrimitive(*input*, *hint*).
3. Return *input*.

NOTE When ToPrimitive is called with no hint, then it generally behaves as if the hint were Number. However, objects may over-ride this behaviour by defining a @@toPrimitive method. Of the objects defined in this specification only Date objects (see 20.4.4.45) and Symbol objects (see 19.4.3.5) over-ride the default ToPrimitive behaviour. Date objects treat no hint as if the hint were String.

7.1.1.1 OrdinaryToPrimitive (*O*, *hint*)

When the abstract operation OrdinaryToPrimitive is called with arguments *O* and *hint*, the following steps are taken:

1. Assert: Type(*O*) is Object.
2. Assert: Type(*hint*) is String and its value is either **"string"** or **"number"**.
3. If *hint* is **"string"**, then
    a. Let *methodNames* be « **"toString"**, **"valueOf"** ».
4. Else,
    a. Let *methodNames* be « **"valueOf"**, **"toString"** ».
5. For each *name* in *methodNames* in List order, do
    a. Let *method* be ? Get(*O*, *name*).
    b. If IsCallable(*method*) is **true**, then
        i. Let *result* be ? Call(*method*, *O*).
        ii. If Type(*result*) is not Object, return *result*.
6. Throw a **TypeError** exception.

7.1.2 ToBoolean (*argument*)

The abstract operation ToBoolean converts *argument* to a value of type Boolean according to Table 10:

Table 10: ToBoolean Conversions

Argument Type	Result
Undefined	Return **false**.
Null	Return **false**.
Boolean	Return *argument*.
Number	If *argument* is **+0**, **-0**, or **NaN**, return **false**; otherwise return **true**.
String	If *argument* is the empty String (its length is zero), return **false**; otherwise return **true**.
Symbol	Return **true**.
BigInt	If *argument* is **0n**, return **false**; otherwise return **true**.
Object	Return **true**.

7.1.3 ToNumeric (*value*)

The abstract operation ToNumeric returns *value* converted to a numeric value of type Number or BigInt. This abstract operation functions as follows:

1. Let *primValue* be ? ToPrimitive(*value*, hint Number).
2. If Type(*primValue*) is BigInt, return *primValue*.
3. Return ? ToNumber(*primValue*).

7.1.4 ToNumber (*argument*)

The abstract operation ToNumber converts *argument* to a value of type Number according to Table 11:

Table 11: ToNumber Conversions

Argument Type	Result
Undefined	Return **NaN**.
Null	Return **+0**.
Boolean	If *argument* is **true**, return 1. If *argument* is **false**, return **+0**.
Number	Return *argument* (no conversion).
String	See grammar and conversion algorithm below.
Symbol	Throw a **TypeError** exception.
BigInt	Throw a **TypeError** exception.
Object	Apply the following steps: 1. Let *primValue* be ? ToPrimitive(*argument*, hint Number). 2. Return ? ToNumber(*primValue*).

7.1.4.1 ToNumber Applied to the String Type

ToNumber applied to Strings applies the following grammar to the input String interpreted as a sequence of UTF-16 encoded code points (6.1.4). If the grammar cannot interpret the String as an expansion of *StringNumericLiteral*, then the result of ToNumber is **NaN**.

NOTE 1 The terminal symbols of this grammar are all composed of characters in the Unicode Basic Multilingual Plane (BMP). Therefore, the result of ToNumber will be **NaN** if the string contains any leading surrogate or trailing surrogate code units, whether paired or unpaired.

Syntax

StringNumericLiteral :::
  StrWhiteSpace$_{opt}$
  StrWhiteSpace$_{opt}$ *StrNumericLiteral* *StrWhiteSpace*$_{opt}$

StrWhiteSpace :::
  StrWhiteSpaceChar *StrWhiteSpace*$_{opt}$

StrWhiteSpaceChar :::
  WhiteSpace
  LineTerminator

StrNumericLiteral :::
  StrDecimalLiteral
  NonDecimalIntegerLiteral

StrDecimalLiteral :::
    StrUnsignedDecimalLiteral
    + *StrUnsignedDecimalLiteral*
    - *StrUnsignedDecimalLiteral*

StrUnsignedDecimalLiteral :::
    Infinity
    DecimalDigits . *DecimalDigits*$_{opt}$ *ExponentPart*$_{opt}$
    . *DecimalDigits* *ExponentPart*$_{opt}$
    DecimalDigits *ExponentPart*$_{opt}$

All grammar symbols not explicitly defined above have the definitions used in the Lexical Grammar for numeric literals (11.8.3)

NOTE 2 Some differences should be noted between the syntax of a *StringNumericLiteral* and a *NumericLiteral*:

- A *StringNumericLiteral* may include leading and/or trailing white space and/or line terminators.
- A *StringNumericLiteral* that is decimal may have any number of leading **0** digits.
- A *StringNumericLiteral* that is decimal may include a **+** or **-** to indicate its sign.
- A *StringNumericLiteral* that is empty or contains only white space is converted to **+0**.
- **Infinity** and **-Infinity** are recognized as a *StringNumericLiteral* but not as a *NumericLiteral*.
- A *StringNumericLiteral* cannot include a *BigIntLiteralSuffix*.

7.1.4.1.1 Runtime Semantics: MV

The conversion of a String to a Number value is similar overall to the determination of the Number value for a numeric literal (see 11.8.3), but some of the details are different, so the process for converting a String numeric literal to a value of Number type is given here. This value is determined in two steps: first, a mathematical value (MV) is derived from the String numeric literal; second, this mathematical value is rounded as described below. The MV on any grammar symbol, not provided below, is the MV for that symbol defined in 11.8.3.1.

- The MV of *StringNumericLiteral* ::: [empty] is $0_{\mathbb{R}}$.
- The MV of *StringNumericLiteral* ::: *StrWhiteSpace* is $0_{\mathbb{R}}$.
- The MV of *StringNumericLiteral* ::: *StrWhiteSpace*$_{opt}$ *StrNumericLiteral* *StrWhiteSpace*$_{opt}$ is the MV of *StrNumericLiteral*, no matter whether white space is present or not.
- The MV of *StrNumericLiteral* ::: *StrDecimalLiteral* is the MV of *StrDecimalLiteral*.
- The MV of *StrNumericLiteral* ::: *NonDecimalIntegerLiteral* is the MV of *NonDecimalIntegerLiteral*.
- The MV of *StrDecimalLiteral* ::: *StrUnsignedDecimalLiteral* is the MV of *StrUnsignedDecimalLiteral*.
- The MV of *StrDecimalLiteral* ::: + *StrUnsignedDecimalLiteral* is the MV of *StrUnsignedDecimalLiteral*.
- The MV of *StrDecimalLiteral* ::: - *StrUnsignedDecimalLiteral* is the negative of the MV of *StrUnsignedDecimalLiteral*. (Note that if the MV of *StrUnsignedDecimalLiteral* is 0, the negative of this MV is also 0. The rounding rule described below handles the conversion of this signless mathematical zero to a floating-point **+0** or **-0** as appropriate.)
- The MV of *StrUnsignedDecimalLiteral* ::: **Infinity** is ${10_{\mathbb{R}}}^{10000_{\mathbb{R}}}$ (a value so large that it will round to +∞).

- The MV of *StrUnsignedDecimalLiteral* ::: *DecimalDigits* **.** is the MV of *DecimalDigits*.
- The MV of *StrUnsignedDecimalLiteral* ::: *DecimalDigits* **.** *DecimalDigits* is the MV of the first *DecimalDigits* plus (the MV of the second *DecimalDigits* times $10_{\mathbb{R}}^{-\mathbb{R}n}$), where n is the mathematical value of the number of code points in the second *DecimalDigits*.
- The MV of *StrUnsignedDecimalLiteral* ::: *DecimalDigits* **.** *ExponentPart* is the MV of *DecimalDigits* times $10_{\mathbb{R}}^{e}$, where e is the MV of *ExponentPart*.
- The MV of *StrUnsignedDecimalLiteral* ::: *DecimalDigits* **.** *DecimalDigits* *ExponentPart* is (the MV of the first *DecimalDigits* plus (the MV of the second *DecimalDigits* times $10_{\mathbb{R}}^{-\mathbb{R}n}$)) times $10_{\mathbb{R}}^{e}$, where n is the mathematical value of the number of code points in the second *DecimalDigits* and e is the MV of *ExponentPart*.
- The MV of *StrUnsignedDecimalLiteral* ::: **.** *DecimalDigits* is the MV of *DecimalDigits* times $10_{\mathbb{R}}^{-\mathbb{R}n}$, where n is the mathematical value of the number of code points in *DecimalDigits*.
- The MV of *StrUnsignedDecimalLiteral* ::: **.** *DecimalDigits* *ExponentPart* is the MV of *DecimalDigits* times $10_{\mathbb{R}}^{e-\mathbb{R}n}$, where n is the mathematical value of the number of code points in *DecimalDigits* and e is the MV of *ExponentPart*.
- The MV of *StrUnsignedDecimalLiteral* ::: *DecimalDigits* is the MV of *DecimalDigits*.
- The MV of *StrUnsignedDecimalLiteral* ::: *DecimalDigits* *ExponentPart* is the MV of *DecimalDigits* times $10_{\mathbb{R}}^{e}$, where e is the MV of *ExponentPart*.

Once the exact MV for a String numeric literal has been determined, it is then rounded to a value of the Number type. If the MV is 0, then the rounded value is **+0** unless the first non white space code point in the String numeric literal is **−**, in which case the rounded value is **-0**. Otherwise, the rounded value must be the Number value for the MV (in the sense defined in 6.1.6.1), unless the literal includes a *StrUnsignedDecimalLiteral* and the literal has more than 20 significant digits, in which case the Number value may be either the Number value for the MV of a literal produced by replacing each significant digit after the 20th with a 0 digit or the Number value for the MV of a literal produced by replacing each significant digit after the 20th with a 0 digit and then incrementing the literal at the 20th digit position. A digit is significant if it is not part of an *ExponentPart* and

- it is not **0**; or
- there is a nonzero digit to its left and there is a nonzero digit, not in the *ExponentPart*, to its right.

7.1.5 ToInteger (*argument*)

The abstract operation ToInteger converts *argument* to an integral Number value. This abstract operation functions as follows:

1. Let *number* be ? ToNumber(*argument*).
2. If *number* is **NaN**, **+0**, or **-0**, return **+0**.
3. If *number* is +∞ or **-**∞, return *number*.
4. Let *integer* be the Number value that is the same sign as *number* and whose magnitude is floor(abs(*number*)).
5. If *integer* is **-0**, return **+0**.
6. Return *integer*.

7.1.6 ToInt32 (*argument*)

The abstract operation ToInt32 converts *argument* to one of 2^{32} integer values in the range -2^{31} through $2^{31} - 1$, inclusive. This abstract operation functions as follows:

1. Let *number* be ? ToNumber(*argument*).
2. If *number* is **NaN**, **+0**, **-0**, +∞, or -∞, return **+0**.
3. Let *int* be the Number value that is the same sign as *number* and whose magnitude is floor(abs(*number*)).
4. Let *int32bit* be *int* modulo 2^{32}.
5. If *int32bit* ≥ 2^{31}, return *int32bit* - 2^{32}; otherwise return *int32bit*.

NOTE Given the above definition of ToInt32:

- The ToInt32 abstract operation is idempotent: if applied to a result that it produced, the second application leaves that value unchanged.
- ToInt32(ToUint32(*x*)) is equal to ToInt32(*x*) for all values of *x*. (It is to preserve this latter property that +∞ and -∞ are mapped to **+0**.)
- ToInt32 maps **-0** to **+0**.

7.1.7 ToUint32 (*argument*)

The abstract operation ToUint32 converts *argument* to one of 2^{32} integer values in the range 0 through 2^{32} - 1, inclusive. This abstract operation functions as follows:

1. Let *number* be ? ToNumber(*argument*).
2. If *number* is **NaN**, **+0**, **-0**, +∞, or -∞, return **+0**.
3. Let *int* be the Number value that is the same sign as *number* and whose magnitude is floor(abs(*number*)).
4. Let *int32bit* be *int* modulo 2^{32}.
5. Return *int32bit*.

NOTE Given the above definition of ToUint32:

- Step 5 is the only difference between ToUint32 and ToInt32.
- The ToUint32 abstract operation is idempotent: if applied to a result that it produced, the second application leaves that value unchanged.
- ToUint32(ToInt32(*x*)) is equal to ToUint32(*x*) for all values of *x*. (It is to preserve this latter property that +∞ and -∞ are mapped to **+0**.)
- ToUint32 maps **-0** to **+0**.

7.1.8 ToInt16 (*argument*)

The abstract operation ToInt16 converts *argument* to one of 2^{16} integer values in the range -32768 through 32767, inclusive. This abstract operation functions as follows:

1. Let *number* be ? ToNumber(*argument*).
2. If *number* is **NaN**, **+0**, **-0**, +∞, or -∞, return **+0**.
3. Let *int* be the Number value that is the same sign as *number* and whose magnitude is floor(abs(*number*)).
4. Let *int16bit* be *int* modulo 2^{16}.
5. If *int16bit* ≥ 2^{15}, return *int16bit* - 2^{16}; otherwise return *int16bit*.

7.1.9 ToUint16 (*argument*)

The abstract operation ToUint16 converts *argument* to one of 2^{16} integer values in the range 0 through 2^{16} - 1, inclusive. This abstract operation functions as follows:

1. Let *number* be ? ToNumber(*argument*).
2. If *number* is **NaN**, **+0**, **-0**, +∞, or -∞, return **+0**.
3. Let *int* be the Number value that is the same sign as *number* and whose magnitude is floor(abs(*number*)).
4. Let *int16bit* be *int* modulo 2^{16}.
5. Return *int16bit*.

NOTE Given the above definition of ToUint16:

- The substitution of 2^{16} for 2^{32} in step 4 is the only difference between ToUint32 and ToUint16.
- ToUint16 maps **-0** to **+0**.

7.1.10 ToInt8 (*argument*)

The abstract operation ToInt8 converts *argument* to one of 2^8 integer values in the range -128 through 127, inclusive. This abstract operation functions as follows:

1. Let *number* be ? ToNumber(*argument*).
2. If *number* is **NaN**, **+0**, **-0**, +∞, or -∞, return **+0**.
3. Let *int* be the Number value that is the same sign as *number* and whose magnitude is floor(abs(*number*)).
4. Let *int8bit* be *int* modulo 2^8.
5. If *int8bit* ≥ 2^7, return *int8bit* - 2^8; otherwise return *int8bit*.

7.1.11 ToUint8 (*argument*)

The abstract operation ToUint8 converts *argument* to one of 2^8 integer values in the range 0 through 255, inclusive. This abstract operation functions as follows:

1. Let *number* be ? ToNumber(*argument*).
2. If *number* is **NaN**, **+0**, **-0**, +∞, or -∞, return **+0**.
3. Let *int* be the Number value that is the same sign as *number* and whose magnitude is floor(abs(*number*)).
4. Let *int8bit* be *int* modulo 2^8.
5. Return *int8bit*.

7.1.12 ToUint8Clamp (*argument*)

The abstract operation ToUint8Clamp converts *argument* to one of 2^8 integer values in the range 0 through 255, inclusive. This abstract operation functions as follows:

1. Let *number* be ? ToNumber(*argument*).
2. If *number* is **NaN**, return **+0**.

3. If *number* ≤ 0, return **+0**.
4. If *number* ≥ 255, return 255.
5. Let *f* be floor(*number*).
6. If *f* + 0.5 < *number*, return *f* + 1.
7. If *number* < *f* + 0.5, return *f*.
8. If *f* is odd, return *f* + 1.
9. Return *f*.

NOTE Unlike the other ECMAScript integer conversion abstract operation, ToUint8Clamp rounds rather than truncates non-integer values and does not convert +∞ to 0. ToUint8Clamp does "round half to even" tie-breaking. This differs from `Math.round` which does "round half up" tie-breaking.

7.1.13 ToBigInt (*argument*)

The abstract operation ToBigInt converts its argument *argument* to a BigInt value, or throws if an implicit conversion from Number would be required.

1. Let *prim* be ? ToPrimitive(*argument*, hint Number).
2. Return the value that *prim* corresponds to in Table 12.

Table 12: BigInt Conversions

Argument Type	Result
Undefined	Throw a **TypeError** exception.
Null	Throw a **TypeError** exception.
Boolean	Return `1n` if *prim* is **true** and `0n` if *prim* is **false**.
BigInt	Return *prim*.
Number	Throw a **TypeError** exception.
String	1. Let *n* be ! StringToBigInt(*prim*). 2. If *n* is **NaN**, throw a **SyntaxError** exception. 3. Return *n*.
Symbol	Throw a **TypeError** exception.

7.1.14 StringToBigInt (*argument*)

Apply the algorithm in 7.1.4.1 with the following changes:

- Replace the *StrUnsignedDecimalLiteral* production with *DecimalDigits* to not allow **Infinity**, decimal points, or exponents.
- If the MV is **NaN**, return **NaN**, otherwise return the BigInt which exactly corresponds to the MV, rather than rounding to a Number.

7.1.15 ToBigInt64 (*argument*)

The abstract operation ToBigInt64 converts *argument* to one of 2^{64} integer values in the range -2^{63} through $2^{63}-1$, inclusive. This abstract operation functions as follows:

1. Let *n* be ? ToBigInt(*argument*).
2. Let *int64bit* be *n* modulo 2^{64}.
3. If *int64bit* ≥ 2^{63}, return *int64bit* - 2^{64}; otherwise return *int64bit*.

7.1.16 ToBigUint64 (*argument*)

The abstract operation ToBigUint64 converts *argument* to one of 2^{64} integer values in the range 0 through $2^{64}-1$, inclusive. This abstract operation functions as follows:

1. Let *n* be ? ToBigInt(*argument*).
2. Let *int64bit* be *n* modulo 2^{64}.
3. Return *int64bit*.

7.1.17 ToString (*argument*)

The abstract operation ToString converts *argument* to a value of type String according to Table 13:

Table 13: ToString Conversions

Argument Type	Result
Undefined	Return **"undefined"**.
Null	Return **"null"**.
Boolean	If *argument* is **true**, return **"true"**. If *argument* is **false**, return **"false"**.
Number	Return ! Number::toString(*argument*).
String	Return *argument*.
Symbol	Throw a **TypeError** exception.
BigInt	Return ! BigInt::toString(*argument*).
Object	Apply the following steps: 1. Let *primValue* be ? ToPrimitive(*argument*, hint String). 2. Return ? ToString(*primValue*).

7.1.18 ToObject (*argument*)

The abstract operation ToObject converts *argument* to a value of type Object according to Table 14:

Table 14: ToObject Conversions

Argument Type	Result
Undefined	Throw a **TypeError** exception.
Null	Throw a **TypeError** exception.
Boolean	Return a new Boolean object whose [[BooleanData]] internal slot is set to *argument*. See 19.3 for a description of Boolean objects.
Number	Return a new Number object whose [[NumberData]] internal slot is set to *argument*. See 20.1 for a description of Number objects.
String	Return a new String object whose [[StringData]] internal slot is set to *argument*. See 21.1 for a description of String objects.
Symbol	Return a new Symbol object whose [[SymbolData]] internal slot is set to *argument*. See 19.4 for a description of Symbol objects.
BigInt	Return a new BigInt object whose [[BigIntData]] internal slot is set to *argument*. See 20.2 for a description of BigInt objects.
Object	Return *argument*.

7.1.19 ToPropertyKey (*argument*)

The abstract operation ToPropertyKey converts *argument* to a value that can be used as a property key by performing the following steps:

1. Let *key* be ? ToPrimitive(*argument*, hint String).
2. If Type(*key*) is Symbol, then
    a. Return *key*.
3. Return ! ToString(*key*).

7.1.20 ToLength (*argument*)

The abstract operation ToLength converts *argument* to an integer suitable for use as the length of an array-like object. It performs the following steps:

1. Let *len* be ? ToInteger(*argument*).
2. If *len* ≤ **+0**, return **+0**.
3. Return min(*len*, 2^{53} - 1).

7.1.21 CanonicalNumericIndexString (*argument*)

The abstract operation CanonicalNumericIndexString returns *argument* converted to a Number value if it is a String representation of a Number that would be produced by ToString, or the string **"-0"**. Otherwise, it returns **undefined**.

This abstract operation functions as follows:

1. Assert: Type(*argument*) is String.
2. If *argument* is **"-0"**, return **-0**.
3. Let *n* be ! ToNumber(*argument*).
4. If SameValue(! ToString(*n*), *argument*) is **false**, return **undefined**.
5. Return *n*.

A *canonical numeric string* is any String value for which the CanonicalNumericIndexString abstract operation does not return **undefined**.

7.1.22 ToIndex (*value*)

The abstract operation ToIndex returns *value* argument converted to a non-negative integer if it is a valid integer index value. This abstract operation functions as follows:

1. If *value* is **undefined**, then
    a. Let *index* be 0.
2. Else,
    a. Let *integerIndex* be ? ToInteger(*value*).
    b. If *integerIndex* < 0, throw a **RangeError** exception.
    c. Let *index* be ! ToLength(*integerIndex*).
    d. If ! SameValue(*integerIndex*, *index*) is **false**, throw a **RangeError** exception.
3. Return *index*.

7.2 Testing and Comparison Operations

7.2.1 RequireObjectCoercible (*argument*)

The abstract operation RequireObjectCoercible throws an error if *argument* is a value that cannot be converted to an Object using ToObject. It is defined by Table 15:

Table 15: RequireObjectCoercible Results

Argument Type	Result
Undefined	Throw a **TypeError** exception.
Null	Throw a **TypeError** exception.
Boolean	Return *argument*.
Number	Return *argument*.
String	Return *argument*.
Symbol	Return *argument*.
BigInt	Return *argument*.
Object	Return *argument*.

7.2.2 IsArray (*argument*)

The abstract operation IsArray takes one argument *argument*, and performs the following steps:

1. If Type(*argument*) is not Object, return **false**.
2. If *argument* is an Array exotic object, return **true**.
3. If *argument* is a Proxy exotic object, then
    a. If *argument*.[[ProxyHandler]] is **null**, throw a **TypeError** exception.
    b. Let *target* be *argument*.[[ProxyTarget]].
    c. Return ? IsArray(*target*).
4. Return **false**.

7.2.3 IsCallable (*argument*)

The abstract operation IsCallable determines if *argument*, which must be an ECMAScript language value, is a callable function with a [[Call]] internal method.

1. If Type(*argument*) is not Object, return **false**.
2. If *argument* has a [[Call]] internal method, return **true**.
3. Return **false**.

7.2.4 IsConstructor (*argument*)

The abstract operation IsConstructor determines if *argument*, which must be an ECMAScript language value, is a function object with a [[Construct]] internal method.

1. If Type(*argument*) is not Object, return **false**.
2. If *argument* has a [[Construct]] internal method, return **true**.
3. Return **false**.

7.2.5 IsExtensible (*O*)

The abstract operation IsExtensible is used to determine whether additional properties can be added to the object that is *O*. A Boolean value is returned. This abstract operation performs the following steps:

1. Assert: Type(*O*) is Object.
2. Return ? *O*.[[IsExtensible]]().

7.2.6 IsInteger (*argument*)

The abstract operation IsInteger determines if *argument* is a finite integer Number value.

1. If Type(*argument*) is not Number, return **false**.
2. If *argument* is **NaN**, +∞, or -∞, return **false**.
3. If floor(abs(*argument*)) ≠ abs(*argument*), return **false**.
4. Return **true**.

7.2.7 IsNonNegativeInteger (*argument*)

The abstract operation IsNonNegativeInteger determines if *argument* is non-negative integer Number value.

1. If ! IsInteger(*argument*) is **true** and *argument* ≥ 0, return **true**.
2. Otherwise, return **false**.

7.2.8 IsPropertyKey (*argument*)

The abstract operation IsPropertyKey determines if *argument*, which must be an ECMAScript language value, is a value that may be used as a property key.

1. If Type(*argument*) is String, return **true**.
2. If Type(*argument*) is Symbol, return **true**.
3. Return **false**.

7.2.9 IsRegExp (*argument*)

The abstract operation IsRegExp with argument *argument* performs the following steps:

1. If Type(*argument*) is not Object, return **false**.
2. Let *matcher* be ? Get(*argument*, @@match).
3. If *matcher* is not **undefined**, return ! ToBoolean(*matcher*).
4. If *argument* has a [[RegExpMatcher]] internal slot, return **true**.
5. Return **false**.

7.2.10 IsStringPrefix (*p*, *q*)

The abstract operation IsStringPrefix determines if String *p* is a prefix of String *q*.

1. Assert: Type(*p*) is String.
2. Assert: Type(*q*) is String.
3. If *q* can be the string-concatenation of *p* and some other String *r*, return **true**. Otherwise, return **false**.

NOTE Any String is a prefix of itself, because *r* may be the empty String.

7.2.11 SameValue (*x*, *y*)

The internal comparison abstract operation SameValue(*x*, *y*), where *x* and *y* are ECMAScript language values, produces **true** or **false**. Such a comparison is performed as follows:

1. If Type(*x*) is different from Type(*y*), return **false**.
2. If Type(*x*) is Number or BigInt, then
   a. Return ! Type(*x*)::sameValue(*x*, *y*).
3. Return ! SameValueNonNumeric(*x*, *y*).

NOTE This algorithm differs from the Strict Equality Comparison Algorithm in its treatment of signed zeroes and NaNs.

7.2.12 SameValueZero (*x*, *y*)

The internal comparison abstract operation SameValueZero(*x*, *y*), where *x* and *y* are ECMAScript language values, produces **true** or **false**. Such a comparison is performed as follows:

1. If Type(*x*) is different from Type(*y*), return **false**.
2. If Type(*x*) is Number or BigInt, then
    a. Return ! Type(*x*)::sameValueZero(*x*, *y*).
3. Return ! SameValueNonNumeric(*x*, *y*).

NOTE SameValueZero differs from SameValue only in its treatment of **+0** and **-0**.

7.2.13 SameValueNonNumeric (*x*, *y*)

The internal comparison abstract operation SameValueNonNumeric(*x*, *y*), where neither *x* nor *y* are numeric type values, produces **true** or **false**. Such a comparison is performed as follows:

1. Assert: Type(*x*) is not Number or BigInt.
2. Assert: Type(*x*) is the same as Type(*y*).
3. If Type(*x*) is Undefined, return **true**.
4. If Type(*x*) is Null, return **true**.
5. If Type(*x*) is String, then
    a. If *x* and *y* are exactly the same sequence of code units (same length and same code units at corresponding indices), return **true**; otherwise, return **false**.
6. If Type(*x*) is Boolean, then
    a. If *x* and *y* are both **true** or both **false**, return **true**; otherwise, return **false**.
7. If Type(*x*) is Symbol, then
    a. If *x* and *y* are both the same Symbol value, return **true**; otherwise, return **false**.
8. If *x* and *y* are the same Object value, return **true**. Otherwise, return **false**.

7.2.14 Abstract Relational Comparison

The comparison *x* < *y*, where *x* and *y* are values, produces **true**, **false**, or **undefined** (which indicates that at least one operand is **NaN**). In addition to *x* and *y* the algorithm takes a Boolean flag named *LeftFirst* as a parameter. The flag is used to control the order in which operations with potentially visible side-effects are performed upon *x* and *y*. It is necessary because ECMAScript specifies left to right evaluation of expressions. The default value of *LeftFirst* is **true** and indicates that the *x* parameter corresponds to an expression that occurs to the left of the *y* parameter's corresponding expression. If *LeftFirst* is **false**, the reverse is the case and operations must be performed upon *y* before *x*. Such a comparison is performed as follows:

1. If the *LeftFirst* flag is **true**, then
    a. Let *px* be ? ToPrimitive(*x*, hint Number).
    b. Let *py* be ? ToPrimitive(*y*, hint Number).
2. Else,
    a. NOTE: The order of evaluation needs to be reversed to preserve left to right evaluation.
    b. Let *py* be ? ToPrimitive(*y*, hint Number).
    c. Let *px* be ? ToPrimitive(*x*, hint Number).
3. If Type(*px*) is String and Type(*py*) is String, then

a. If IsStringPrefix(py, px) is **true**, return **false**.
b. If IsStringPrefix(px, py) is **true**, return **true**.
c. Let k be the smallest nonnegative integer such that the code unit at index k within px is different from the code unit at index k within py. (There must be such a k, for neither String is a prefix of the other.)
d. Let m be the integer that is the numeric value of the code unit at index k within px.
e. Let n be the integer that is the numeric value of the code unit at index k within py.
f. If $m < n$, return **true**. Otherwise, return **false**.

4. Else,
   a. If Type(px) is BigInt and Type(py) is String, then
      i. Let ny be ! StringToBigInt(py).
      ii. If ny is **NaN**, return **undefined**.
      iii. Return BigInt::lessThan(px, ny).
   b. If Type(px) is String and Type(py) is BigInt, then
      i. Let nx be ! StringToBigInt(px).
      ii. If nx is **NaN**, return **undefined**.
      iii. Return BigInt::lessThan(nx, py).
   c. NOTE: Because px and py are primitive values, evaluation order is not important.
   d. Let nx be ? ToNumeric(px).
   e. Let ny be ? ToNumeric(py).
   f. If Type(nx) is the same as Type(ny), return Type(nx)::lessThan(nx, ny).
   g. Assert: Type(nx) is BigInt and Type(ny) is Number, or Type(nx) is Number and Type(ny) is BigInt.
   h. If nx or ny is **NaN**, return **undefined**.
   i. If nx is **-**∞ or ny is +∞, return **true**.
   j. If nx is +∞ or ny is **-**∞, return **false**.
   k. If the mathematical value of nx is less than the mathematical value of ny, return **true**; otherwise return **false**.

NOTE 1 Step 3 differs from step 7 in the algorithm for the addition operator **+** (12.8.3) by using the logical-and operation instead of the logical-or operation.

NOTE 2 The comparison of Strings uses a simple lexicographic ordering on sequences of code unit values. There is no attempt to use the more complex, semantically oriented definitions of character or string equality and collating order defined in the Unicode specification. Therefore String values that are canonically equal according to the Unicode standard could test as unequal. In effect this algorithm assumes that both Strings are already in normalized form. Also, note that for strings containing supplementary characters, lexicographic ordering on sequences of UTF-16 code unit values differs from that on sequences of code point values.

7.2.15 Abstract Equality Comparison

The comparison x == y, where x and y are values, produces **true** or **false**. Such a comparison is performed as follows:

1. If Type(x) is the same as Type(y), then
   a. Return the result of performing Strict Equality Comparison x === y.
2. If x is **null** and y is **undefined**, return **true**.
3. If x is **undefined** and y is **null**, return **true**.

4. If Type(x) is Number and Type(y) is String, return the result of the comparison x == ! ToNumber(y).
5. If Type(x) is String and Type(y) is Number, return the result of the comparison ! ToNumber(x) == y.
6. If Type(x) is BigInt and Type(y) is String, then
    a. Let n be ! StringToBigInt(y).
    b. If n is **NaN**, return **false**.
    c. Return the result of the comparison x == n.
7. If Type(x) is String and Type(y) is BigInt, return the result of the comparison y == x.
8. If Type(x) is Boolean, return the result of the comparison ! ToNumber(x) == y.
9. If Type(y) is Boolean, return the result of the comparison x == ! ToNumber(y).
10. If Type(x) is either String, Number, BigInt, or Symbol and Type(y) is Object, return the result of the comparison x == ToPrimitive(y).
11. If Type(x) is Object and Type(y) is either String, Number, BigInt, or Symbol, return the result of the comparison ToPrimitive(x) == y.
12. If Type(x) is BigInt and Type(y) is Number, or if Type(x) is Number and Type(y) is BigInt, then
    a. If x or y are any of **NaN**, +∞, or -∞, return **false**.
    b. If the mathematical value of x is equal to the mathematical value of y, return **true**; otherwise return **false**.
13. Return **false**.

7.2.16 Strict Equality Comparison

The comparison x === y, where x and y are values, produces **true** or **false**. Such a comparison is performed as follows:

1. If Type(x) is different from Type(y), return **false**.
2. If Type(x) is Number or BigInt, then
    a. Return ! Type(x)::equal(x, y).
3. Return ! SameValueNonNumeric(x, y).

NOTE This algorithm differs from the SameValue Algorithm in its treatment of signed zeroes and NaNs.

7.3 Operations on Objects

7.3.1 MakeBasicObject (*internalSlotsList*)

The abstract operation MakeBasicObject is the source of all ECMAScript objects that are created algorithmically, including both ordinary objects and exotic objects. It factors out common steps used in creating all objects, and centralizes object creation.

1. Assert: *internalSlotsList* is a List of internal slot names.
2. Let *obj* be a newly created object with an internal slot for each name in *internalSlotsList*.
3. Set *obj*'s essential internal methods to the default ordinary object definitions specified in 9.1.
4. Assert: If the caller will not be overriding both *obj*'s [[GetPrototypeOf]] and [[SetPrototypeOf]] essential internal methods, then *internalSlotsList* contains [[Prototype]].
5. Assert: If the caller will not be overriding all of *obj*'s [[SetPrototypeOf]], [[IsExtensible]], and [[PreventExtensions]] essential internal methods, then *internalSlotsList* contains [[Extensible]].
6. If *internalSlotsList* contains [[Extensible]], then set *obj*.[[Extensible]] to **true**.

7. Return *obj*.

> NOTE Within this specification, exotic objects are created in abstract operations such as ArrayCreate and BoundFunctionCreate by first calling MakeBasicObject to obtain a basic, foundational object, and then overriding some or all of that object's internal methods. In order to encapsulate exotic object creation, the object's essential internal methods are never modified outside those operations.

7.3.2 Get (*O*, *P*)

The abstract operation Get is used to retrieve the value of a specific property of an object. The operation is called with arguments *O* and *P* where *O* is the object and *P* is the property key. This abstract operation performs the following steps:

1. Assert: Type(*O*) is Object.
2. Assert: IsPropertyKey(*P*) is **true**.
3. Return ? *O*.[[Get]](*P*, *O*).

7.3.3 GetV (*V*, *P*)

The abstract operation GetV is used to retrieve the value of a specific property of an ECMAScript language value. If the value is not an object, the property lookup is performed using a wrapper object appropriate for the type of the value. The operation is called with arguments *V* and *P* where *V* is the value and *P* is the property key. This abstract operation performs the following steps:

1. Assert: IsPropertyKey(*P*) is **true**.
2. Let *O* be ? ToObject(*V*).
3. Return ? *O*.[[Get]](*P*, *V*).

7.3.4 Set (*O*, *P*, *V*, *Throw*)

The abstract operation Set is used to set the value of a specific property of an object. The operation is called with arguments *O*, *P*, *V*, and *Throw* where *O* is the object, *P* is the property key, *V* is the new value for the property and *Throw* is a Boolean flag. This abstract operation performs the following steps:

1. Assert: Type(*O*) is Object.
2. Assert: IsPropertyKey(*P*) is **true**.
3. Assert: Type(*Throw*) is Boolean.
4. Let *success* be ? *O*.[[Set]](*P*, *V*, *O*).
5. If *success* is **false** and *Throw* is **true**, throw a **TypeError** exception.
6. Return *success*.

7.3.5 CreateDataProperty (*O*, *P*, *V*)

The abstract operation CreateDataProperty is used to create a new own property of an object. The operation is called with arguments *O*, *P*, and *V* where *O* is the object, *P* is the property key, and *V* is the value for the property. This abstract operation performs the following steps:

1. Assert: Type(*O*) is Object.

2. Assert: IsPropertyKey(*P*) is **true**.
3. Let *newDesc* be the PropertyDescriptor { [[Value]]: *V*, [[Writable]]: **true**, [[Enumerable]]: **true**, [[Configurable]]: **true** }.
4. Return ? *O*.[[DefineOwnProperty]](*P*, *newDesc*).

NOTE This abstract operation creates a property whose attributes are set to the same defaults used for properties created by the ECMAScript language assignment operator. Normally, the property will not already exist. If it does exist and is not configurable or if *O* is not extensible, [[DefineOwnProperty]] will return **false**.

7.3.6 CreateMethodProperty (*O*, *P*, *V*)

The abstract operation CreateMethodProperty is used to create a new own property of an object. The operation is called with arguments *O*, *P*, and *V* where *O* is the object, *P* is the property key, and *V* is the value for the property. This abstract operation performs the following steps:

1. Assert: Type(*O*) is Object.
2. Assert: IsPropertyKey(*P*) is **true**.
3. Let *newDesc* be the PropertyDescriptor { [[Value]]: *V*, [[Writable]]: **true**, [[Enumerable]]: **false**, [[Configurable]]: **true** }.
4. Return ? *O*.[[DefineOwnProperty]](*P*, *newDesc*).

NOTE This abstract operation creates a property whose attributes are set to the same defaults used for built-in methods and methods defined using class declaration syntax. Normally, the property will not already exist. If it does exist and is not configurable or if *O* is not extensible, [[DefineOwnProperty]] will return **false**.

7.3.7 CreateDataPropertyOrThrow (*O*, *P*, *V*)

The abstract operation CreateDataPropertyOrThrow is used to create a new own property of an object. It throws a **TypeError** exception if the requested property update cannot be performed. The operation is called with arguments *O*, *P*, and *V* where *O* is the object, *P* is the property key, and *V* is the value for the property. This abstract operation performs the following steps:

1. Assert: Type(*O*) is Object.
2. Assert: IsPropertyKey(*P*) is **true**.
3. Let *success* be ? CreateDataProperty(*O*, *P*, *V*).
4. If *success* is **false**, throw a **TypeError** exception.
5. Return *success*.

NOTE This abstract operation creates a property whose attributes are set to the same defaults used for properties created by the ECMAScript language assignment operator. Normally, the property will not already exist. If it does exist and is not configurable or if *O* is not extensible, [[DefineOwnProperty]] will return **false** causing this operation to throw a **TypeError** exception.

7.3.8 DefinePropertyOrThrow (*O*, *P*, *desc*)

The abstract operation DefinePropertyOrThrow is used to call the [[DefineOwnProperty]] internal method of an object in a manner that will throw a **TypeError** exception if the requested property update cannot be performed. The operation is called with arguments *O*, *P*, and *desc* where *O* is the object, *P* is the property key, and *desc* is the Property Descriptor for the property. This abstract operation performs the following steps:

1. Assert: Type(*O*) is Object.
2. Assert: IsPropertyKey(*P*) is **true**.
3. Let *success* be ? *O*.[[DefineOwnProperty]](*P*, *desc*).
4. If *success* is **false**, throw a **TypeError** exception.
5. Return *success*.

7.3.9 DeletePropertyOrThrow (*O*, *P*)

The abstract operation DeletePropertyOrThrow is used to remove a specific own property of an object. It throws an exception if the property is not configurable. The operation is called with arguments *O* and *P* where *O* is the object and *P* is the property key. This abstract operation performs the following steps:

1. Assert: Type(*O*) is Object.
2. Assert: IsPropertyKey(*P*) is **true**.
3. Let *success* be ? *O*.[[Delete]](*P*).
4. If *success* is **false**, throw a **TypeError** exception.
5. Return *success*.

7.3.10 GetMethod (*V*, *P*)

The abstract operation GetMethod is used to get the value of a specific property of an ECMAScript language value when the value of the property is expected to be a function. The operation is called with arguments *V* and *P* where *V* is the ECMAScript language value, *P* is the property key. This abstract operation performs the following steps:

1. Assert: IsPropertyKey(*P*) is **true**.
2. Let *func* be ? GetV(*V*, *P*).
3. If *func* is either **undefined** or **null**, return **undefined**.
4. If IsCallable(*func*) is **false**, throw a **TypeError** exception.
5. Return *func*.

7.3.11 HasProperty (*O*, *P*)

The abstract operation HasProperty is used to determine whether an object has a property with the specified property key. The property may be either an own or inherited. A Boolean value is returned. The operation is called with arguments *O* and *P* where *O* is the object and *P* is the property key. This abstract operation performs the following steps:

1. Assert: Type(*O*) is Object.
2. Assert: IsPropertyKey(*P*) is **true**.
3. Return ? *O*.[[HasProperty]](*P*).

7.3.12 HasOwnProperty (*O*, *P*)

The abstract operation HasOwnProperty is used to determine whether an object has an own property with the specified property key. A Boolean value is returned. The operation is called with arguments *O* and *P* where *O* is the object and *P* is the property key. This abstract operation performs the following steps:

1. Assert: Type(*O*) is Object.
2. Assert: IsPropertyKey(*P*) is **true**.
3. Let *desc* be ? *O*.[[GetOwnProperty]](*P*).
4. If *desc* is **undefined**, return **false**.
5. Return **true**.

7.3.13 Call (*F*, *V* [, *argumentsList*])

The abstract operation Call is used to call the [[Call]] internal method of a function object. The operation is called with arguments *F*, *V*, and optionally *argumentsList* where *F* is the function object, *V* is an ECMAScript language value that is the **this** value of the [[Call]], and *argumentsList* is the value passed to the corresponding argument of the internal method. If *argumentsList* is not present, a new empty List is used as its value. This abstract operation performs the following steps:

1. If *argumentsList* is not present, set *argumentsList* to a new empty List.
2. If IsCallable(*F*) is **false**, throw a **TypeError** exception.
3. Return ? *F*.[[Call]](*V*, *argumentsList*).

7.3.14 Construct (*F* [, *argumentsList* [, *newTarget*]])

The abstract operation Construct is used to call the [[Construct]] internal method of a function object. The operation is called with arguments *F*, and optionally *argumentsList*, and *newTarget* where *F* is the function object. *argumentsList* and *newTarget* are the values to be passed as the corresponding arguments of the internal method. If *argumentsList* is not present, a new empty List is used as its value. If *newTarget* is not present, *F* is used as its value. This abstract operation performs the following steps:

1. If *newTarget* is not present, set *newTarget* to *F*.
2. If *argumentsList* is not present, set *argumentsList* to a new empty List.
3. Assert: IsConstructor(*F*) is **true**.
4. Assert: IsConstructor(*newTarget*) is **true**.
5. Return ? *F*.[[Construct]](*argumentsList*, *newTarget*).

NOTE If *newTarget* is not present, this operation is equivalent to: `new F(...argumentsList)`

7.3.15 SetIntegrityLevel (*O*, *level*)

The abstract operation SetIntegrityLevel is used to fix the set of own properties of an object. This abstract operation performs the following steps:

1. Assert: Type(*O*) is Object.
2. Assert: *level* is either sealed or frozen.
3. Let *status* be ? *O*.[[PreventExtensions]]().

4. If *status* is **false**, return **false**.
5. Let *keys* be ? *O*.[[OwnPropertyKeys]]().
6. If *level* is sealed, then
    a. For each element *k* of *keys*, do
        i. Perform ? DefinePropertyOrThrow(*O*, *k*, PropertyDescriptor { [[Configurable]]: **false** }).
7. Else,
    a. Assert: *level* is frozen.
    b. For each element *k* of *keys*, do
        i. Let *currentDesc* be ? *O*.[[GetOwnProperty]](*k*).
        ii. If *currentDesc* is not **undefined**, then
            1. If IsAccessorDescriptor(*currentDesc*) is **true**, then
                a. Let *desc* be the PropertyDescriptor { [[Configurable]]: **false** }.
            2. Else,
                a. Let *desc* be the PropertyDescriptor { [[Configurable]]: **false**, [[Writable]]: **false** }.
            3. Perform ? DefinePropertyOrThrow(*O*, *k*, *desc*).
8. Return **true**.

7.3.16 TestIntegrityLevel (*O*, *level*)

The abstract operation TestIntegrityLevel is used to determine if the set of own properties of an object are fixed. This abstract operation performs the following steps:

1. Assert: Type(*O*) is Object.
2. Assert: *level* is either sealed or frozen.
3. Let *extensible* be ? IsExtensible(*O*).
4. If *extensible* is **true**, return **false**.
5. NOTE: If the object is extensible, none of its properties are examined.
6. Let *keys* be ? *O*.[[OwnPropertyKeys]]().
7. For each element *k* of *keys*, do
    a. Let *currentDesc* be ? *O*.[[GetOwnProperty]](*k*).
    b. If *currentDesc* is not **undefined**, then
        i. If *currentDesc*.[[Configurable]] is **true**, return **false**.
        ii. If *level* is frozen and IsDataDescriptor(*currentDesc*) is **true**, then
            1. If *currentDesc*.[[Writable]] is **true**, return **false**.
8. Return **true**.

7.3.17 CreateArrayFromList (*elements*)

The abstract operation CreateArrayFromList is used to create an Array object whose elements are provided by a List. This abstract operation performs the following steps:

1. Assert: *elements* is a List whose elements are all ECMAScript language values.
2. Let *array* be ! ArrayCreate(0).
3. Let *n* be 0.
4. For each element *e* of *elements*, do
    a. Perform ! CreateDataPropertyOrThrow(*array*, ! ToString(*n*), *e*).
    b. Set *n* to *n* + 1.
5. Return *array*.

7.3.18 LengthOfArrayLike (*obj*)

The abstract operation LengthOfArrayLike returns the value of the **"length"** property of an array-like object.

1. Assert: Type(*obj*) is Object.
2. Return ? ToLength(? Get(*obj*, **"length"**)).

An *array-like object* is any object for which this operation returns an integer rather than an abrupt completion.

NOTE 1 Typically, an array-like object would also have some properties with integer index names. However, that is not a requirement of this definition.

NOTE 2 Array objects and String objects are examples of array-like objects.

7.3.19 CreateListFromArrayLike (*obj* [, *elementTypes*])

The abstract operation CreateListFromArrayLike is used to create a List value whose elements are provided by the indexed properties of an array-like object, *obj*. The optional argument *elementTypes* is a List containing the names of ECMAScript Language Types that are allowed for element values of the List that is created. This abstract operation performs the following steps:

1. If *elementTypes* is not present, set *elementTypes* to « Undefined, Null, Boolean, String, Symbol, Number, BigInt, Object ».
2. If Type(*obj*) is not Object, throw a **TypeError** exception.
3. Let *len* be ? LengthOfArrayLike(*obj*).
4. Let *list* be a new empty List.
5. Let *index* be 0.
6. Repeat, while *index* < *len*
   a. Let *indexName* be ! ToString(*index*).
   b. Let *next* be ? Get(*obj*, *indexName*).
   c. If Type(*next*) is not an element of *elementTypes*, throw a **TypeError** exception.
   d. Append *next* as the last element of *list*.
   e. Set *index* to *index* + 1.
7. Return *list*.

7.3.20 Invoke (*V*, *P* [, *argumentsList*])

The abstract operation Invoke is used to call a method property of an ECMAScript language value. The operation is called with arguments *V*, *P*, and optionally *argumentsList* where *V* serves as both the lookup point for the property and the **this** value of the call, *P* is the property key, and *argumentsList* is the list of arguments values passed to the method. If *argumentsList* is not present, a new empty List is used as its value. This abstract operation performs the following steps:

1. Assert: IsPropertyKey(*P*) is **true**.
2. If *argumentsList* is not present, set *argumentsList* to a new empty List.
3. Let *func* be ? GetV(*V*, *P*).
4. Return ? Call(*func*, *V*, *argumentsList*).

7.3.21 OrdinaryHasInstance (*C*, *O*)

The abstract operation OrdinaryHasInstance implements the default algorithm for determining if an object *O* inherits from the instance object inheritance path provided by constructor *C*. This abstract operation performs the following steps:

1. If IsCallable(*C*) is **false**, return **false**.
2. If *C* has a [[BoundTargetFunction]] internal slot, then
    a. Let *BC* be *C*.[[BoundTargetFunction]].
    b. Return ? InstanceofOperator(*O*, *BC*).
3. If Type(*O*) is not Object, return **false**.
4. Let *P* be ? Get(*C*, **"prototype"**).
5. If Type(*P*) is not Object, throw a **TypeError** exception.
6. Repeat,
    a. Set *O* to ? *O*.[[GetPrototypeOf]]().
    b. If *O* is **null**, return **false**.
    c. If SameValue(*P*, *O*) is **true**, return **true**.

7.3.22 SpeciesConstructor (*O*, *defaultConstructor*)

The abstract operation SpeciesConstructor is used to retrieve the constructor that should be used to create new objects that are derived from the argument object *O*. The *defaultConstructor* argument is the constructor to use if a constructor @@species property cannot be found starting from *O*. This abstract operation performs the following steps:

1. Assert: Type(*O*) is Object.
2. Let *C* be ? Get(*O*, **"constructor"**).
3. If *C* is **undefined**, return *defaultConstructor*.
4. If Type(*C*) is not Object, throw a **TypeError** exception.
5. Let *S* be ? Get(*C*, @@species).
6. If *S* is either **undefined** or **null**, return *defaultConstructor*.
7. If IsConstructor(*S*) is **true**, return *S*.
8. Throw a **TypeError** exception.

7.3.23 EnumerableOwnPropertyNames (*O*, *kind*)

When the abstract operation EnumerableOwnPropertyNames is called with an Object *O* and *kind* which is one of (key, value, key+value), the following steps are taken:

1. Assert: Type(*O*) is Object.
2. Let *ownKeys* be ? *O*.[[OwnPropertyKeys]]().
3. Let *properties* be a new empty List.
4. For each element *key* of *ownKeys* in List order, do
    a. If Type(*key*) is String, then
        i. Let *desc* be ? *O*.[[GetOwnProperty]](*key*).
        ii. If *desc* is not **undefined** and *desc*.[[Enumerable]] is **true**, then
            1. If *kind* is key, append *key* to *properties*.
            2. Else,
                a. Let *value* be ? Get(*O*, *key*).
                b. If *kind* is value, append *value* to *properties*.

c. Else,
    i. Assert: *kind* is key+value.
    ii. Let *entry* be ! CreateArrayFromList(« *key*, *value* »).
    iii. Append *entry* to *properties*.

5. Return *properties*.

7.3.24 GetFunctionRealm (*obj*)

The abstract operation GetFunctionRealm with argument *obj* performs the following steps:

1. Assert: ! IsCallable(*obj*) is **true**.
2. If *obj* has a [[Realm]] internal slot, then
    a. Return *obj*.[[Realm]].
3. If *obj* is a bound function exotic object, then
    a. Let *target* be *obj*.[[BoundTargetFunction]].
    b. Return ? GetFunctionRealm(*target*).
4. If *obj* is a Proxy exotic object, then
    a. If *obj*.[[ProxyHandler]] is **null**, throw a **TypeError** exception.
    b. Let *proxyTarget* be *obj*.[[ProxyTarget]].
    c. Return ? GetFunctionRealm(*proxyTarget*).
5. Return the current Realm Record.

NOTE Step 5 will only be reached if *obj* is a non-standard function exotic object that does not have a [[Realm]] internal slot.

7.3.25 CopyDataProperties (*target*, *source*, *excludedItems*)

When the abstract operation CopyDataProperties is called with arguments *target*, *source*, and *excludedItems*, the following steps are taken:

1. Assert: Type(*target*) is Object.
2. Assert: *excludedItems* is a List of property keys.
3. If *source* is **undefined** or **null**, return *target*.
4. Let *from* be ! ToObject(*source*).
5. Let *keys* be ? *from*.[[OwnPropertyKeys]]().
6. For each element *nextKey* of *keys* in List order, do
    a. Let *excluded* be **false**.
    b. For each element *e* of *excludedItems* in List order, do
        i. If SameValue(*e*, *nextKey*) is **true**, then
            1. Set *excluded* to **true**.
    c. If *excluded* is **false**, then
        i. Let *desc* be ? *from*.[[GetOwnProperty]](*nextKey*).
        ii. If *desc* is not **undefined** and *desc*.[[Enumerable]] is **true**, then
            1. Let *propValue* be ? Get(*from*, *nextKey*).
            2. Perform ! CreateDataPropertyOrThrow(*target*, *nextKey*, *propValue*).
7. Return *target*.

NOTE The target passed in here is always a newly created object which is not directly accessible in case of an error being thrown.

7.4 Operations on Iterator Objects

See Common Iteration Interfaces (25.1).

7.4.1 GetIterator (*obj* [, *hint* [, *method*]])

The abstract operation GetIterator with argument *obj* and optional arguments *hint* and *method* performs the following steps:

1. If *hint* is not present, set *hint* to sync.
2. Assert: *hint* is either sync or async.
3. If *method* is not present, then
    a. If *hint* is async, then
        i. Set *method* to ? GetMethod(*obj*, @@asyncIterator).
        ii. If *method* is **undefined**, then
            1. Let *syncMethod* be ? GetMethod(*obj*, @@iterator).
            2. Let *syncIteratorRecord* be ? GetIterator(*obj*, sync, *syncMethod*).
            3. Return ! CreateAsyncFromSyncIterator(*syncIteratorRecord*).
    b. Otherwise, set *method* to ? GetMethod(*obj*, @@iterator).
4. Let *iterator* be ? Call(*method*, *obj*).
5. If Type(*iterator*) is not Object, throw a **TypeError** exception.
6. Let *nextMethod* be ? GetV(*iterator*, **"next"**).
7. Let *iteratorRecord* be the Record { [[Iterator]]: *iterator*, [[NextMethod]]: *nextMethod*, [[Done]]: **false** }.
8. Return *iteratorRecord*.

7.4.2 IteratorNext (*iteratorRecord* [, *value*])

The abstract operation IteratorNext with argument *iteratorRecord* and optional argument *value* performs the following steps:

1. If *value* is not present, then
    a. Let *result* be ? Call(*iteratorRecord*.[[NextMethod]], *iteratorRecord*.[[Iterator]]).
2. Else,
    a. Let *result* be ? Call(*iteratorRecord*.[[NextMethod]], *iteratorRecord*.[[Iterator]], « *value* »).
3. If Type(*result*) is not Object, throw a **TypeError** exception.
4. Return *result*.

7.4.3 IteratorComplete (*iterResult*)

The abstract operation IteratorComplete with argument *iterResult* performs the following steps:

1. Assert: Type(*iterResult*) is Object.
2. Return ! ToBoolean(? Get(*iterResult*, **"done"**)).

7.4.4 IteratorValue (*iterResult*)

The abstract operation IteratorValue with argument *iterResult* performs the following steps:

1. Assert: Type(*iterResult*) is Object.
2. Return ? Get(*iterResult*, **"value"**).

7.4.5 IteratorStep (*iteratorRecord*)

The abstract operation IteratorStep with argument *iteratorRecord* requests the next value from *iteratorRecord*.[[Iterator]] by calling *iteratorRecord*.[[NextMethod]] and returns either **false** indicating that the iterator has reached its end or the IteratorResult object if a next value is available. IteratorStep performs the following steps:

1. Let *result* be ? IteratorNext(*iteratorRecord*).
2. Let *done* be ? IteratorComplete(*result*).
3. If *done* is **true**, return **false**.
4. Return *result*.

7.4.6 IteratorClose (*iteratorRecord*, *completion*)

The abstract operation IteratorClose with arguments *iteratorRecord* and *completion* is used to notify an iterator that it should perform any actions it would normally perform when it has reached its completed state:

1. Assert: Type(*iteratorRecord*.[[Iterator]]) is Object.
2. Assert: *completion* is a Completion Record.
3. Let *iterator* be *iteratorRecord*.[[Iterator]].
4. Let *return* be ? GetMethod(*iterator*, **"return"**).
5. If *return* is **undefined**, return Completion(*completion*).
6. Let *innerResult* be Call(*return*, *iterator*).
7. If *completion*.[[Type]] is throw, return Completion(*completion*).
8. If *innerResult*.[[Type]] is throw, return Completion(*innerResult*).
9. If Type(*innerResult*.[[Value]]) is not Object, throw a **TypeError** exception.
10. Return Completion(*completion*).

7.4.7 AsyncIteratorClose (*iteratorRecord*, *completion*)

The abstract operation AsyncIteratorClose with arguments *iteratorRecord* and *completion* is used to notify an async iterator that it should perform any actions it would normally perform when it has reached its completed state:

1. Assert: Type(*iteratorRecord*.[[Iterator]]) is Object.
2. Assert: *completion* is a Completion Record.
3. Let *iterator* be *iteratorRecord*.[[Iterator]].
4. Let *return* be ? GetMethod(*iterator*, **"return"**).
5. If *return* is **undefined**, return Completion(*completion*).
6. Let *innerResult* be Call(*return*, *iterator*).
7. If *innerResult*.[[Type]] is normal, set *innerResult* to Await(*innerResult*.[[Value]]).
8. If *completion*.[[Type]] is throw, return Completion(*completion*).
9. If *innerResult*.[[Type]] is throw, return Completion(*innerResult*).
10. If Type(*innerResult*.[[Value]]) is not Object, throw a **TypeError** exception.

11. Return Completion(*completion*).

7.4.8 CreateIterResultObject (*value*, *done*)

The abstract operation CreateIterResultObject with arguments *value* and *done* creates an object that supports the IteratorResult interface by performing the following steps:

1. Assert: Type(*done*) is Boolean.
2. Let *obj* be OrdinaryObjectCreate(%Object.prototype%).
3. Perform ! CreateDataPropertyOrThrow(*obj*, **"value"**, *value*).
4. Perform ! CreateDataPropertyOrThrow(*obj*, **"done"**, *done*).
5. Return *obj*.

7.4.9 CreateListIteratorRecord (*list*)

The abstract operation CreateListIteratorRecord with argument *list* creates an Iterator (25.1.1.2) object record whose next method returns the successive elements of *list*. It performs the following steps:

1. Let *iterator* be OrdinaryObjectCreate(%IteratorPrototype%, « [[IteratedList]], [[ListNextIndex]] »).
2. Set *iterator*.[[IteratedList]] to *list*.
3. Set *iterator*.[[ListNextIndex]] to 0.
4. Let *steps* be the algorithm steps defined in ListIteratorNext Functions.
5. Let *next* be ! CreateBuiltinFunction(*steps*, « »).
6. Return Record { [[Iterator]]: *iterator*, [[NextMethod]]: *next*, [[Done]]: **false** }.

NOTE The list iterator object is never directly accessible to ECMAScript code.

7.4.9.1 ListIteratorNext Functions

A ListIteratorNext function is an anonymous built-in function. When called with no arguments, it performs the following steps:

1. Let *O* be the **this** value.
2. Assert: Type(*O*) is Object.
3. Assert: *O* has an [[IteratedList]] internal slot.
4. Let *list* be *O*.[[IteratedList]].
5. Let *index* be *O*.[[ListNextIndex]].
6. Let *len* be the number of elements of *list*.
7. If *index* ≥ *len*, then
    a. Return CreateIterResultObject(**undefined**, **true**).
8. Set *O*.[[ListNextIndex]] to *index* + 1.
9. Return CreateIterResultObject(*list*[*index*], **false**).

The **"length"** property of a ListIteratorNext function is 0.

8 Executable Code and Execution Contexts

8.1 Lexical Environments

A *Lexical Environment* is a specification type used to define the association of *Identifier*s to specific variables and functions based upon the lexical nesting structure of ECMAScript code. A Lexical Environment consists of an Environment Record and a possibly null reference to an *outer* Lexical Environment. Usually a Lexical Environment is associated with some specific syntactic structure of ECMAScript code such as a *FunctionDeclaration*, a *BlockStatement*, or a *Catch* clause of a *TryStatement* and a new Lexical Environment is created each time such code is evaluated.

An Environment Record records the identifier bindings that are created within the scope of its associated Lexical Environment. It is referred to as the Lexical Environment's *EnvironmentRecord*.

The outer environment reference is used to model the logical nesting of Lexical Environment values. The outer reference of a (inner) Lexical Environment is a reference to the Lexical Environment that logically surrounds the inner Lexical Environment. An outer Lexical Environment may, of course, have its own outer Lexical Environment. A Lexical Environment may serve as the outer environment for multiple inner Lexical Environments. For example, if a *FunctionDeclaration* contains two nested *FunctionDeclaration*s then the Lexical Environments of each of the nested functions will have as their outer Lexical Environment the Lexical Environment of the current evaluation of the surrounding function.

A *global environment* is a Lexical Environment which does not have an outer environment. The global environment's outer environment reference is **null**. A global environment's EnvironmentRecord may be prepopulated with identifier bindings and includes an associated global object whose properties provide some of the global environment's identifier bindings. As ECMAScript code is executed, additional properties may be added to the global object and the initial properties may be modified.

A *module environment* is a Lexical Environment that contains the bindings for the top level declarations of a *Module*. It also contains the bindings that are explicitly imported by the *Module*. The outer environment of a module environment is a global environment.

A *function environment* is a Lexical Environment that corresponds to the invocation of an ECMAScript function object. A function environment may establish a new **`this`** binding. A function environment also captures the state necessary to support **`super`** method invocations.

Lexical Environments and Environment Record values are purely specification mechanisms and need not correspond to any specific artefact of an ECMAScript implementation. It is impossible for an ECMAScript program to directly access or manipulate such values.

8.1.1 Environment Records

There are two primary kinds of *Environment Record* values used in this specification: *declarative Environment Records* and *object Environment Records*. Declarative Environment Records are used to define the effect of ECMAScript language syntactic elements such as *FunctionDeclaration*s, *VariableDeclaration*s, and *Catch* clauses that directly associate identifier bindings with ECMAScript language values. Object Environment Records are used to define the effect of ECMAScript elements such as *WithStatement* that associate identifier bindings with the properties of some object. Global Environment Records and function Environment Records are specializations that are used for specifically for *Script* global declarations and for top-level declarations within functions.

For specification purposes Environment Record values are values of the Record specification type and can be thought of as existing in a simple object-oriented hierarchy where Environment Record is an abstract class with three concrete subclasses, declarative Environment Record, object Environment Record, and global Environment Record. Function

Environment Records and module Environment Records are subclasses of declarative Environment Record. The abstract class includes the abstract specification methods defined in Table 16. These abstract methods have distinct concrete algorithms for each of the concrete subclasses.

Table 16: Abstract Methods of Environment Records

Method	Purpose
HasBinding(N)	Determine if an Environment Record has a binding for the String value *N*. Return **true** if it does and **false** if it does not.
CreateMutableBinding(N, D)	Create a new but uninitialized mutable binding in an Environment Record. The String value *N* is the text of the bound name. If the Boolean argument *D* is **true** the binding may be subsequently deleted.
CreateImmutableBinding(N, S)	Create a new but uninitialized immutable binding in an Environment Record. The String value *N* is the text of the bound name. If *S* is **true** then attempts to set it after it has been initialized will always throw an exception, regardless of the strict mode setting of operations that reference that binding.
InitializeBinding(N, V)	Set the value of an already existing but uninitialized binding in an Environment Record. The String value *N* is the text of the bound name. *V* is the value for the binding and is a value of any ECMAScript language type.
SetMutableBinding(N, V, S)	Set the value of an already existing mutable binding in an Environment Record. The String value *N* is the text of the bound name. *V* is the value for the binding and may be a value of any ECMAScript language type. *S* is a Boolean flag. If *S* is **true** and the binding cannot be set throw a **TypeError** exception.
GetBindingValue(N, S)	Returns the value of an already existing binding from an Environment Record. The String value *N* is the text of the bound name. *S* is used to identify references originating in strict mode code or that otherwise require strict mode reference semantics. If *S* is **true** and the binding does not exist throw a **ReferenceError** exception. If the binding exists but is uninitialized a **ReferenceError** is thrown, regardless of the value of *S*.
DeleteBinding(N)	Delete a binding from an Environment Record. The String value *N* is the text of the bound name. If a binding for *N* exists, remove the binding and return **true**. If the binding exists but cannot be removed return **false**. If the binding does not exist return **true**.
HasThisBinding()	Determine if an Environment Record establishes a `this` binding. Return **true** if it does and **false** if it does not.
HasSuperBinding()	Determine if an Environment Record establishes a `super` method binding. Return **true** if it does and **false** if it does not.
WithBaseObject()	If this Environment Record is associated with a `with` statement, return the with object. Otherwise, return **undefined**.

8.1.1.1 Declarative Environment Records

Each declarative Environment Record is associated with an ECMAScript program scope containing variable, constant, let, class, module, import, and/or function declarations. A declarative Environment Record binds the set of identifiers defined by the declarations contained within its scope.

The behaviour of the concrete specification methods for declarative Environment Records is defined by the following algorithms.

8.1.1.1.1 HasBinding (*N*)

The concrete Environment Record method HasBinding for declarative Environment Records simply determines if the argument identifier is one of the identifiers bound by the record:

1. Let *envRec* be the declarative Environment Record for which the method was invoked.
2. If *envRec* has a binding for the name that is the value of *N*, return **true**.
3. Return **false**.

8.1.1.1.2 CreateMutableBinding (*N*, *D*)

The concrete Environment Record method CreateMutableBinding for declarative Environment Records creates a new mutable binding for the name *N* that is uninitialized. A binding must not already exist in this Environment Record for *N*. If Boolean argument *D* has the value **true** the new binding is marked as being subject to deletion.

1. Let *envRec* be the declarative Environment Record for which the method was invoked.
2. Assert: *envRec* does not already have a binding for *N*.
3. Create a mutable binding in *envRec* for *N* and record that it is uninitialized. If *D* is **true**, record that the newly created binding may be deleted by a subsequent DeleteBinding call.
4. Return NormalCompletion(empty).

8.1.1.1.3 CreateImmutableBinding (*N*, *S*)

The concrete Environment Record method CreateImmutableBinding for declarative Environment Records creates a new immutable binding for the name *N* that is uninitialized. A binding must not already exist in this Environment Record for *N*. If the Boolean argument *S* has the value **true** the new binding is marked as a strict binding.

1. Let *envRec* be the declarative Environment Record for which the method was invoked.
2. Assert: *envRec* does not already have a binding for *N*.
3. Create an immutable binding in *envRec* for *N* and record that it is uninitialized. If *S* is **true**, record that the newly created binding is a strict binding.
4. Return NormalCompletion(empty).

8.1.1.1.4 InitializeBinding (*N*, *V*)

The concrete Environment Record method InitializeBinding for declarative Environment Records is used to set the bound value of the current binding of the identifier whose name is the value of the argument *N* to the value of argument *V*. An uninitialized binding for *N* must already exist.

1. Let *envRec* be the declarative Environment Record for which the method was invoked.
2. Assert: *envRec* must have an uninitialized binding for *N*.
3. Set the bound value for *N* in *envRec* to *V*.
4. Record that the binding for *N* in *envRec* has been initialized.
5. Return NormalCompletion(empty).

8.1.1.1.5 SetMutableBinding (*N*, *V*, *S*)

The concrete Environment Record method SetMutableBinding for declarative Environment Records attempts to change the bound value of the current binding of the identifier whose name is the value of the argument *N* to the value of argument *V*. A binding for *N* normally already exists, but in rare cases it may not. If the binding is an immutable binding, a **TypeError** is thrown if *S* is **true**.

1. Let *envRec* be the declarative Environment Record for which the method was invoked.
2. If *envRec* does not have a binding for *N*, then
    a. If *S* is **true**, throw a **ReferenceError** exception.
    b. Perform *envRec*.CreateMutableBinding(*N*, **true**).
    c. Perform *envRec*.InitializeBinding(*N*, *V*).
    d. Return NormalCompletion(empty).
3. If the binding for *N* in *envRec* is a strict binding, set *S* to **true**.
4. If the binding for *N* in *envRec* has not yet been initialized, throw a **ReferenceError** exception.
5. Else if the binding for *N* in *envRec* is a mutable binding, change its bound value to *V*.
6. Else,
    a. Assert: This is an attempt to change the value of an immutable binding.
    b. If *S* is **true**, throw a **TypeError** exception.
7. Return NormalCompletion(empty).

NOTE An example of ECMAScript code that results in a missing binding at step 2 is:

```
function f() { eval("var x; x = (delete x, 0);"); }
```

8.1.1.1.6 GetBindingValue (*N*, *S*)

The concrete Environment Record method GetBindingValue for declarative Environment Records simply returns the value of its bound identifier whose name is the value of the argument *N*. If the binding exists but is uninitialized a **ReferenceError** is thrown, regardless of the value of *S*.

1. Let *envRec* be the declarative Environment Record for which the method was invoked.
2. Assert: *envRec* has a binding for *N*.
3. If the binding for *N* in *envRec* is an uninitialized binding, throw a **ReferenceError** exception.
4. Return the value currently bound to *N* in *envRec*.

8.1.1.1.7 DeleteBinding (*N*)

The concrete Environment Record method DeleteBinding for declarative Environment Records can only delete bindings that have been explicitly designated as being subject to deletion.

1. Let *envRec* be the declarative Environment Record for which the method was invoked.
2. Assert: *envRec* has a binding for the name that is the value of *N*.
3. If the binding for *N* in *envRec* cannot be deleted, return **false**.
4. Remove the binding for *N* from *envRec*.
5. Return **true**.

8.1.1.1.8 HasThisBinding ( )

Regular declarative Environment Records do not provide a **`this`** binding.

1. Return **false**.

8.1.1.1.9 HasSuperBinding ( )

Regular declarative Environment Records do not provide a **`super`** binding.

1. Return **false**.

8.1.1.1.10 WithBaseObject ( )

Declarative Environment Records always return **undefined** as their WithBaseObject.

1. Return **undefined**.

8.1.1.2 Object Environment Records

Each object Environment Record is associated with an object called its *binding object*. An object Environment Record binds the set of string identifier names that directly correspond to the property names of its binding object. Property keys that are not strings in the form of an *IdentifierName* are not included in the set of bound identifiers. Both own and inherited properties are included in the set regardless of the setting of their [[Enumerable]] attribute. Because properties can be dynamically added and deleted from objects, the set of identifiers bound by an object Environment Record may potentially change as a side-effect of any operation that adds or deletes properties. Any bindings that are created as a result of such a side-effect are considered to be a mutable binding even if the Writable attribute of the corresponding property has the value **false**. Immutable bindings do not exist for object Environment Records.

Object Environment Records created for **`with`** statements (13.11) can provide their binding object as an implicit **this** value for use in function calls. The capability is controlled by a *withEnvironment* Boolean value that is associated with each object Environment Record. By default, the value of *withEnvironment* is **false** for any object Environment Record.

The behaviour of the concrete specification methods for object Environment Records is defined by the following algorithms.

8.1.1.2.1 HasBinding (*N*)

The concrete Environment Record method HasBinding for object Environment Records determines if its associated binding object has a property whose name is the value of the argument *N*:

1. Let *envRec* be the object Environment Record for which the method was invoked.
2. Let *bindings* be the binding object for *envRec*.
3. Let *foundBinding* be ? HasProperty(*bindings*, *N*).
4. If *foundBinding* is **false**, return **false**.
5. If the *withEnvironment* flag of *envRec* is **false**, return **true**.
6. Let *unscopables* be ? Get(*bindings*, @@unscopables).
7. If Type(*unscopables*) is Object, then
    a. Let *blocked* be ! ToBoolean(? Get(*unscopables*, *N*)).
    b. If *blocked* is **true**, return **false**.
8. Return **true**.

8.1.1.2.2 CreateMutableBinding (*N*, *D*)

The concrete Environment Record method CreateMutableBinding for object Environment Records creates in an Environment Record's associated binding object a property whose name is the String value and initializes it to the value **undefined**. If Boolean argument *D* has the value **true** the new property's [[Configurable]] attribute is set to **true**; otherwise it is set to **false**.

1. Let *envRec* be the object Environment Record for which the method was invoked.
2. Let *bindings* be the binding object for *envRec*.
3. Return ? DefinePropertyOrThrow(*bindings*, *N*, PropertyDescriptor { [[Value]]: **undefined**, [[Writable]]: **true**, [[Enumerable]]: **true**, [[Configurable]]: *D* }).

> NOTE Normally *envRec* will not have a binding for *N* but if it does, the semantics of DefinePropertyOrThrow may result in an existing binding being replaced or shadowed or cause an abrupt completion to be returned.

8.1.1.2.3 CreateImmutableBinding (*N*, *S*)

The concrete Environment Record method CreateImmutableBinding is never used within this specification in association with object Environment Records.

8.1.1.2.4 InitializeBinding (*N*, *V*)

The concrete Environment Record method InitializeBinding for object Environment Records is used to set the bound value of the current binding of the identifier whose name is the value of the argument *N* to the value of argument *V*. An uninitialized binding for *N* must already exist.

1. Let *envRec* be the object Environment Record for which the method was invoked.
2. Assert: *envRec* must have an uninitialized binding for *N*.
3. Record that the binding for *N* in *envRec* has been initialized.
4. Return ? *envRec*.SetMutableBinding(*N*, *V*, **false**).

> NOTE In this specification, all uses of CreateMutableBinding for object Environment Records are immediately followed by a call to InitializeBinding for the same name. Hence, implementations do not need to explicitly track the initialization state of individual object Environment Record bindings.

8.1.1.2.5 SetMutableBinding (*N*, *V*, *S*)

The concrete Environment Record method SetMutableBinding for object Environment Records attempts to set the value of the Environment Record's associated binding object's property whose name is the value of the argument *N* to the value of argument *V*. A property named *N* normally already exists but if it does not or is not currently writable, error handling is determined by the value of the Boolean argument *S*.

1. Let *envRec* be the object Environment Record for which the method was invoked.
2. Let *bindings* be the binding object for *envRec*.
3. Return ? Set(*bindings*, *N*, *V*, *S*).

8.1.1.2.6 GetBindingValue (*N*, *S*)

The concrete Environment Record method GetBindingValue for object Environment Records returns the value of its

associated binding object's property whose name is the String value of the argument identifier *N*. The property should already exist but if it does not the result depends upon the value of the *S* argument:

1. Let *envRec* be the object Environment Record for which the method was invoked.
2. Let *bindings* be the binding object for *envRec*.
3. Let *value* be ? HasProperty(*bindings*, *N*).
4. If *value* is **false**, then
    a. If *S* is **false**, return the value **undefined**; otherwise throw a **ReferenceError** exception.
5. Return ? Get(*bindings*, *N*).

8.1.1.2.7 DeleteBinding (*N*)

The concrete Environment Record method DeleteBinding for object Environment Records can only delete bindings that correspond to properties of the environment object whose [[Configurable]] attribute have the value **true**.

1. Let *envRec* be the object Environment Record for which the method was invoked.
2. Let *bindings* be the binding object for *envRec*.
3. Return ? *bindings*.[[Delete]](*N*).

8.1.1.2.8 HasThisBinding ( )

Regular object Environment Records do not provide a `this` binding.

1. Return **false**.

8.1.1.2.9 HasSuperBinding ( )

Regular object Environment Records do not provide a `super` binding.

1. Return **false**.

8.1.1.2.10 WithBaseObject ( )

Object Environment Records return **undefined** as their WithBaseObject unless their *withEnvironment* flag is **true**.

1. Let *envRec* be the object Environment Record for which the method was invoked.
2. If the *withEnvironment* flag of *envRec* is **true**, return the binding object for *envRec*.
3. Otherwise, return **undefined**.

8.1.1.3 Function Environment Records

A *function Environment Record* is a declarative Environment Record that is used to represent the top-level scope of a function and, if the function is not an *ArrowFunction*, provides a `this` binding. If a function is not an *ArrowFunction* function and references `super`, its function Environment Record also contains the state that is used to perform `super` method invocations from within the function.

Function Environment Records have the additional state fields listed in Table 17.

Table 17: Additional Fields of Function Environment Records

Field Name	Value	Meaning
[[ThisValue]]	Any	This is the **this** value used for this invocation of the function.
[[ThisBindingStatus]]	lexical | initialized | uninitialized	If the value is lexical, this is an *ArrowFunction* and does not have a local **this** value.
[[FunctionObject]]	Object	The function object whose invocation caused this Environment Record to be created.
[[HomeObject]]	Object | **undefined**	If the associated function has `super` property accesses and is not an *ArrowFunction*, [[HomeObject]] is the object that the function is bound to as a method. The default value for [[HomeObject]] is **undefined**.
[[NewTarget]]	Object | **undefined**	If this Environment Record was created by the [[Construct]] internal method, [[NewTarget]] is the value of the [[Construct]] *newTarget* parameter. Otherwise, its value is **undefined**.

Function Environment Records support all of the declarative Environment Record methods listed in Table 16 and share the same specifications for all of those methods except for HasThisBinding and HasSuperBinding. In addition, function Environment Records support the methods listed in Table 18:

Table 18: Additional Methods of Function Environment Records

Method	Purpose
BindThisValue(V)	Set the [[ThisValue]] and record that it has been initialized.
GetThisBinding()	Return the value of this Environment Record's `this` binding. Throws a **ReferenceError** if the `this` binding has not been initialized.
GetSuperBase()	Return the object that is the base for `super` property accesses bound in this Environment Record. The object is derived from this Environment Record's [[HomeObject]] field. The value **undefined** indicates that `super` property accesses will produce runtime errors.

The behaviour of the additional concrete specification methods for function Environment Records is defined by the following algorithms:

8.1.1.3.1 BindThisValue (*V*)

1. Let *envRec* be the function Environment Record for which the method was invoked.
2. Assert: *envRec*.[[ThisBindingStatus]] is not lexical.
3. If *envRec*.[[ThisBindingStatus]] is initialized, throw a **ReferenceError** exception.
4. Set *envRec*.[[ThisValue]] to *V*.
5. Set *envRec*.[[ThisBindingStatus]] to initialized.
6. Return *V*.

8.1.1.3.2 HasThisBinding ( )

1. Let *envRec* be the function Environment Record for which the method was invoked.
2. If *envRec*.[[ThisBindingStatus]] is lexical, return **false**; otherwise, return **true**.

8.1.1.3.3 HasSuperBinding ( )

1. Let *envRec* be the function Environment Record for which the method was invoked.
2. If *envRec*.[[ThisBindingStatus]] is lexical, return **false**.
3. If *envRec*.[[HomeObject]] has the value **undefined**, return **false**; otherwise, return **true**.

8.1.1.3.4 GetThisBinding ( )

1. Let *envRec* be the function Environment Record for which the method was invoked.
2. Assert: *envRec*.[[ThisBindingStatus]] is not lexical.
3. If *envRec*.[[ThisBindingStatus]] is uninitialized, throw a **ReferenceError** exception.
4. Return *envRec*.[[ThisValue]].

8.1.1.3.5 GetSuperBase ( )

1. Let *envRec* be the function Environment Record for which the method was invoked.
2. Let *home* be *envRec*.[[HomeObject]].
3. If *home* has the value **undefined**, return **undefined**.
4. Assert: Type(*home*) is Object.
5. Return ? *home*.[[GetPrototypeOf]]().

8.1.1.4 Global Environment Records

A global Environment Record is used to represent the outer most scope that is shared by all of the ECMAScript *Script* elements that are processed in a common realm. A global Environment Record provides the bindings for built-in globals (clause 18), properties of the global object, and for all top-level declarations (13.2.8, 13.2.10) that occur within a *Script*.

A global Environment Record is logically a single record but it is specified as a composite encapsulating an object Environment Record and a declarative Environment Record. The object Environment Record has as its base object the global object of the associated Realm Record. This global object is the value returned by the global Environment Record's GetThisBinding concrete method. The object Environment Record component of a global Environment Record contains the bindings for all built-in globals (clause 18) and all bindings introduced by a *FunctionDeclaration*, *GeneratorDeclaration*, *AsyncFunctionDeclaration*, *AsyncGeneratorDeclaration*, or *VariableStatement* contained in global code. The bindings for all other ECMAScript declarations in global code are contained in the declarative Environment Record component of the global Environment Record.

Properties may be created directly on a global object. Hence, the object Environment Record component of a global Environment Record may contain both bindings created explicitly by *FunctionDeclaration*, *GeneratorDeclaration*, *AsyncFunctionDeclaration*, *AsyncGeneratorDeclaration*, or *VariableDeclaration* declarations and bindings created implicitly as properties of the global object. In order to identify which bindings were explicitly created using declarations, a global Environment Record maintains a list of the names bound using its CreateGlobalVarBinding and CreateGlobalFunctionBinding concrete methods.

Global Environment Records have the additional fields listed in Table 19 and the additional methods listed in Table 20.

Table 19: Additional Fields of Global Environment Records

Field Name	Value	Meaning
[[ObjectRecord]]	Object Environment Record	Binding object is the global object. It contains global built-in bindings as well as *FunctionDeclaration*, *GeneratorDeclaration*, *AsyncFunctionDeclaration*, *AsyncGeneratorDeclaration*, and *VariableDeclaration* bindings in global code for the associated realm.
[[GlobalThisValue]]	Object	The value returned by `this` in global scope. Hosts may provide any ECMAScript Object value.
[[DeclarativeRecord]]	Declarative Environment Record	Contains bindings for all declarations in global code for the associated realm code except for *FunctionDeclaration*, *GeneratorDeclaration*, *AsyncFunctionDeclaration*, *AsyncGeneratorDeclaration*, and *VariableDeclaration bindings*.
[[VarNames]]	List of String	The string names bound by *FunctionDeclaration*, *GeneratorDeclaration*, *AsyncFunctionDeclaration*, *AsyncGeneratorDeclaration*, and *VariableDeclaration* declarations in global code for the associated realm.

Table 20: Additional Methods of Global Environment Records

Method	Purpose
GetThisBinding()	Return the value of this Environment Record's **`this`** binding.
HasVarDeclaration (N)	Determines if the argument identifier has a binding in this Environment Record that was created using a *VariableDeclaration*, *FunctionDeclaration*, *GeneratorDeclaration*, *AsyncFunctionDeclaration*, or *AsyncGeneratorDeclaration*.
HasLexicalDeclaration (N)	Determines if the argument identifier has a binding in this Environment Record that was created using a lexical declaration such as a *LexicalDeclaration* or a *ClassDeclaration*.
HasRestrictedGlobalProperty (N)	Determines if the argument is the name of a global object property that may not be shadowed by a global lexical binding.
CanDeclareGlobalVar (N)	Determines if a corresponding CreateGlobalVarBinding call would succeed if called for the same argument *N*.
CanDeclareGlobalFunction (N)	Determines if a corresponding CreateGlobalFunctionBinding call would succeed if called for the same argument *N*.
CreateGlobalVarBinding(N, D)	Used to create and initialize to **undefined** a global **`var`** binding in the [[ObjectRecord]] component of a global Environment Record. The binding will be a mutable binding. The corresponding global object property will have attribute values appropriate for a **`var`**. The String value *N* is the bound name. If *D* is **true** the binding may be deleted. Logically equivalent to CreateMutableBinding followed by a SetMutableBinding but it allows var declarations to receive special treatment.
CreateGlobalFunctionBinding(N, V, D)	Create and initialize a global **`function`** binding in the [[ObjectRecord]] component of a global Environment Record. The binding will be a mutable binding. The corresponding global object property will have attribute values appropriate for a **`function`**. The String value *N* is the bound name. *V* is the initialization value. If the Boolean argument *D* is **true** the binding may be deleted. Logically equivalent to CreateMutableBinding followed by a SetMutableBinding but it allows function declarations to receive special treatment.

The behaviour of the concrete specification methods for global Environment Records is defined by the following algorithms.

8.1.1.4.1 HasBinding (*N*)

The concrete Environment Record method HasBinding for global Environment Records simply determines if the argument identifier is one of the identifiers bound by the record:

1. Let *envRec* be the global Environment Record for which the method was invoked.
2. Let *DclRec* be *envRec*.[[DeclarativeRecord]].

3. If *DclRec*.HasBinding(*N*) is **true**, return **true**.
4. Let *ObjRec* be *envRec*.[[ObjectRecord]].
5. Return ? *ObjRec*.HasBinding(*N*).

8.1.1.4.2 CreateMutableBinding (*N*, *D*)

The concrete Environment Record method CreateMutableBinding for global Environment Records creates a new mutable binding for the name *N* that is uninitialized. The binding is created in the associated DeclarativeRecord. A binding for *N* must not already exist in the DeclarativeRecord. If Boolean argument *D* has the value **true** the new binding is marked as being subject to deletion.

1. Let *envRec* be the global Environment Record for which the method was invoked.
2. Let *DclRec* be *envRec*.[[DeclarativeRecord]].
3. If *DclRec*.HasBinding(*N*) is **true**, throw a **TypeError** exception.
4. Return *DclRec*.CreateMutableBinding(*N*, *D*).

8.1.1.4.3 CreateImmutableBinding (*N*, *S*)

The concrete Environment Record method CreateImmutableBinding for global Environment Records creates a new immutable binding for the name *N* that is uninitialized. A binding must not already exist in this Environment Record for *N*. If the Boolean argument *S* has the value **true** the new binding is marked as a strict binding.

1. Let *envRec* be the global Environment Record for which the method was invoked.
2. Let *DclRec* be *envRec*.[[DeclarativeRecord]].
3. If *DclRec*.HasBinding(*N*) is **true**, throw a **TypeError** exception.
4. Return *DclRec*.CreateImmutableBinding(*N*, *S*).

8.1.1.4.4 InitializeBinding (*N*, *V*)

The concrete Environment Record method InitializeBinding for global Environment Records is used to set the bound value of the current binding of the identifier whose name is the value of the argument *N* to the value of argument *V*. An uninitialized binding for *N* must already exist.

1. Let *envRec* be the global Environment Record for which the method was invoked.
2. Let *DclRec* be *envRec*.[[DeclarativeRecord]].
3. If *DclRec*.HasBinding(*N*) is **true**, then
    a. Return *DclRec*.InitializeBinding(*N*, *V*).
4. Assert: If the binding exists, it must be in the object Environment Record.
5. Let *ObjRec* be *envRec*.[[ObjectRecord]].
6. Return ? *ObjRec*.InitializeBinding(*N*, *V*).

8.1.1.4.5 SetMutableBinding (*N*, *V*, *S*)

The concrete Environment Record method SetMutableBinding for global Environment Records attempts to change the bound value of the current binding of the identifier whose name is the value of the argument *N* to the value of argument *V*. If the binding is an immutable binding, a **TypeError** is thrown if *S* is **true**. A property named *N* normally already exists but if it does not or is not currently writable, error handling is determined by the value of the Boolean argument *S*.

1. Let *envRec* be the global Environment Record for which the method was invoked.

2. Let *DclRec* be *envRec*.[[DeclarativeRecord]].
3. If *DclRec*.HasBinding(*N*) is **true**, then
    a. Return *DclRec*.SetMutableBinding(*N*, *V*, *S*).
4. Let *ObjRec* be *envRec*.[[ObjectRecord]].
5. Return ? *ObjRec*.SetMutableBinding(*N*, *V*, *S*).

8.1.1.4.6 GetBindingValue (*N*, *S*)

The concrete Environment Record method GetBindingValue for global Environment Records returns the value of its bound identifier whose name is the value of the argument *N*. If the binding is an uninitialized binding throw a **ReferenceError** exception. A property named *N* normally already exists but if it does not or is not currently writable, error handling is determined by the value of the Boolean argument *S*.

1. Let *envRec* be the global Environment Record for which the method was invoked.
2. Let *DclRec* be *envRec*.[[DeclarativeRecord]].
3. If *DclRec*.HasBinding(*N*) is **true**, then
    a. Return *DclRec*.GetBindingValue(*N*, *S*).
4. Let *ObjRec* be *envRec*.[[ObjectRecord]].
5. Return ? *ObjRec*.GetBindingValue(*N*, *S*).

8.1.1.4.7 DeleteBinding (*N*)

The concrete Environment Record method DeleteBinding for global Environment Records can only delete bindings that have been explicitly designated as being subject to deletion.

1. Let *envRec* be the global Environment Record for which the method was invoked.
2. Let *DclRec* be *envRec*.[[DeclarativeRecord]].
3. If *DclRec*.HasBinding(*N*) is **true**, then
    a. Return *DclRec*.DeleteBinding(*N*).
4. Let *ObjRec* be *envRec*.[[ObjectRecord]].
5. Let *globalObject* be the binding object for *ObjRec*.
6. Let *existingProp* be ? HasOwnProperty(*globalObject*, *N*).
7. If *existingProp* is **true**, then
    a. Let *status* be ? *ObjRec*.DeleteBinding(*N*).
    b. If *status* is **true**, then
        i. Let *varNames* be *envRec*.[[VarNames]].
        ii. If *N* is an element of *varNames*, remove that element from the *varNames*.
    c. Return *status*.
8. Return **true**.

8.1.1.4.8 HasThisBinding ( )

1. Return **true**.

8.1.1.4.9 HasSuperBinding ( )

1. Return **false**.

8.1.1.4.10 WithBaseObject ( )

Global Environment Records always return **undefined** as their WithBaseObject.

1. Return **undefined**.

8.1.1.4.11 GetThisBinding ( )

1. Let *envRec* be the global Environment Record for which the method was invoked.
2. Return *envRec*.[[GlobalThisValue]].

8.1.1.4.12 HasVarDeclaration (*N*)

The concrete Environment Record method HasVarDeclaration for global Environment Records determines if the argument identifier has a binding in this record that was created using a *VariableStatement* or a *FunctionDeclaration*:

1. Let *envRec* be the global Environment Record for which the method was invoked.
2. Let *varDeclaredNames* be *envRec*.[[VarNames]].
3. If *varDeclaredNames* contains *N*, return **true**.
4. Return **false**.

8.1.1.4.13 HasLexicalDeclaration (*N*)

The concrete Environment Record method HasLexicalDeclaration for global Environment Records determines if the argument identifier has a binding in this record that was created using a lexical declaration such as a *LexicalDeclaration* or a *ClassDeclaration*:

1. Let *envRec* be the global Environment Record for which the method was invoked.
2. Let *DclRec* be *envRec*.[[DeclarativeRecord]].
3. Return *DclRec*.HasBinding(*N*).

8.1.1.4.14 HasRestrictedGlobalProperty (*N*)

The concrete Environment Record method HasRestrictedGlobalProperty for global Environment Records determines if the argument identifier is the name of a property of the global object that must not be shadowed by a global lexical binding:

1. Let *envRec* be the global Environment Record for which the method was invoked.
2. Let *ObjRec* be *envRec*.[[ObjectRecord]].
3. Let *globalObject* be the binding object for *ObjRec*.
4. Let *existingProp* be ? *globalObject*.[[GetOwnProperty]](*N*).
5. If *existingProp* is **undefined**, return **false**.
6. If *existingProp*.[[Configurable]] is **true**, return **false**.
7. Return **true**.

NOTE Properties may exist upon a global object that were directly created rather than being declared using a var or function declaration. A global lexical binding may not be created that has the same name as a non-configurable property of the global object. The global property **"undefined"** is an example of such a property.

8.1.1.4.15 CanDeclareGlobalVar (*N*)

The concrete Environment Record method CanDeclareGlobalVar for global Environment Records determines if a corresponding CreateGlobalVarBinding call would succeed if called for the same argument *N*. Redundant var declarations and var declarations for pre-existing global object properties are allowed.

1. Let *envRec* be the global Environment Record for which the method was invoked.
2. Let *ObjRec* be *envRec*.[[ObjectRecord]].
3. Let *globalObject* be the binding object for *ObjRec*.
4. Let *hasProperty* be ? HasOwnProperty(*globalObject*, *N*).
5. If *hasProperty* is **true**, return **true**.
6. Return ? IsExtensible(*globalObject*).

8.1.1.4.16 CanDeclareGlobalFunction (*N*)

The concrete Environment Record method CanDeclareGlobalFunction for global Environment Records determines if a corresponding CreateGlobalFunctionBinding call would succeed if called for the same argument *N*.

1. Let *envRec* be the global Environment Record for which the method was invoked.
2. Let *ObjRec* be *envRec*.[[ObjectRecord]].
3. Let *globalObject* be the binding object for *ObjRec*.
4. Let *existingProp* be ? *globalObject*.[[GetOwnProperty]](*N*).
5. If *existingProp* is **undefined**, return ? IsExtensible(*globalObject*).
6. If *existingProp*.[[Configurable]] is **true**, return **true**.
7. If IsDataDescriptor(*existingProp*) is **true** and *existingProp* has attribute values { [[Writable]]: **true**, [[Enumerable]]: **true** }, return **true**.
8. Return **false**.

8.1.1.4.17 CreateGlobalVarBinding (*N*, *D*)

The concrete Environment Record method CreateGlobalVarBinding for global Environment Records creates and initializes a mutable binding in the associated object Environment Record and records the bound name in the associated [[VarNames]] List. If a binding already exists, it is reused and assumed to be initialized.

1. Let *envRec* be the global Environment Record for which the method was invoked.
2. Let *ObjRec* be *envRec*.[[ObjectRecord]].
3. Let *globalObject* be the binding object for *ObjRec*.
4. Let *hasProperty* be ? HasOwnProperty(*globalObject*, *N*).
5. Let *extensible* be ? IsExtensible(*globalObject*).
6. If *hasProperty* is **false** and *extensible* is **true**, then
    a. Perform ? *ObjRec*.CreateMutableBinding(*N*, *D*).
    b. Perform ? *ObjRec*.InitializeBinding(*N*, **undefined**).
7. Let *varDeclaredNames* be *envRec*.[[VarNames]].
8. If *varDeclaredNames* does not contain *N*, then
    a. Append *N* to *varDeclaredNames*.
9. Return NormalCompletion(empty).

8.1.1.4.18 CreateGlobalFunctionBinding (*N*, *V*, *D*)

The concrete Environment Record method CreateGlobalFunctionBinding for global Environment Records creates and initializes a mutable binding in the associated object Environment Record and records the bound name in the associated [[VarNames]] List. If a binding already exists, it is replaced.

1. Let *envRec* be the global Environment Record for which the method was invoked.
2. Let *ObjRec* be *envRec*.[[ObjectRecord]].
3. Let *globalObject* be the binding object for *ObjRec*.
4. Let *existingProp* be ? *globalObject*.[[GetOwnProperty]](*N*).
5. If *existingProp* is **undefined** or *existingProp*.[[Configurable]] is **true**, then
    a. Let *desc* be the PropertyDescriptor { [[Value]]: *V*, [[Writable]]: **true**, [[Enumerable]]: **true**, [[Configurable]]: *D* }.
6. Else,
    a. Let *desc* be the PropertyDescriptor { [[Value]]: *V* }.
7. Perform ? DefinePropertyOrThrow(*globalObject*, *N*, *desc*).
8. Record that the binding for *N* in *ObjRec* has been initialized.
9. Perform ? Set(*globalObject*, *N*, *V*, **false**).
10. Let *varDeclaredNames* be *envRec*.[[VarNames]].
11. If *varDeclaredNames* does not contain *N*, then
    a. Append *N* to *varDeclaredNames*.
12. Return NormalCompletion(empty).

NOTE Global function declarations are always represented as own properties of the global object. If possible, an existing own property is reconfigured to have a standard set of attribute values. Steps 8-9 are equivalent to what calling the InitializeBinding concrete method would do and if *globalObject* is a Proxy will produce the same sequence of Proxy trap calls.

8.1.1.5 Module Environment Records

A module Environment Record is a declarative Environment Record that is used to represent the outer scope of an ECMAScript *Module*. In additional to normal mutable and immutable bindings, module Environment Records also provide immutable import bindings which are bindings that provide indirect access to a target binding that exists in another Environment Record.

Module Environment Records support all of the declarative Environment Record methods listed in Table 16 and share the same specifications for all of those methods except for GetBindingValue, DeleteBinding, HasThisBinding and GetThisBinding. In addition, module Environment Records support the methods listed in Table 21:

Table 21: Additional Methods of Module Environment Records

Method	Purpose
CreateImportBinding(N, M, N2)	Create an immutable indirect binding in a module Environment Record. The String value *N* is the text of the bound name. *M* is a Module Record, and *N2* is a binding that exists in *M*'s module Environment Record.
GetThisBinding()	Return the value of this Environment Record's `this` binding.

The behaviour of the additional concrete specification methods for module Environment Records are defined by the following algorithms:

8.1.1.5.1 GetBindingValue (*N*, *S*)

The concrete Environment Record method GetBindingValue for module Environment Records returns the value of its bound identifier whose name is the value of the argument *N*. However, if the binding is an indirect binding the value of the target binding is returned. If the binding exists but is uninitialized a **ReferenceError** is thrown.

1. Assert: *S* is **true**.
2. Let *envRec* be the module Environment Record for which the method was invoked.
3. Assert: *envRec* has a binding for *N*.
4. If the binding for *N* is an indirect binding, then
    a. Let *M* and *N2* be the indirection values provided when this binding for *N* was created.
    b. Let *targetEnv* be *M*.[[Environment]].
    c. If *targetEnv* is **undefined**, throw a **ReferenceError** exception.
    d. Let *targetER* be *targetEnv*'s EnvironmentRecord.
    e. Return ? *targetER*.GetBindingValue(*N2*, **true**).
5. If the binding for *N* in *envRec* is an uninitialized binding, throw a **ReferenceError** exception.
6. Return the value currently bound to *N* in *envRec*.

NOTE *S* will always be **true** because a *Module* is always strict mode code.

8.1.1.5.2 DeleteBinding (*N*)

The concrete Environment Record method DeleteBinding for module Environment Records refuses to delete bindings.

1. Assert: This method is never invoked. See 12.5.3.1.

NOTE Module Environment Records are only used within strict code and an early error rule prevents the delete operator, in strict code, from being applied to a Reference that would resolve to a module Environment Record binding. See 12.5.3.1.

8.1.1.5.3 HasThisBinding ( )

Module Environment Records provide a `this` binding.

1. Return **true**.

8.1.1.5.4 GetThisBinding ( )

1. Return **undefined**.

8.1.1.5.5 CreateImportBinding (*N*, *M*, *N2*)

The concrete Environment Record method CreateImportBinding for module Environment Records creates a new initialized immutable indirect binding for the name *N*. A binding must not already exist in this Environment Record for *N*. *M* is a Module Record, and *N2* is the name of a binding that exists in *M*'s module Environment Record. Accesses to the value of the new binding will indirectly access the bound value of the target binding.

1. Let *envRec* be the module Environment Record for which the method was invoked.
2. Assert: *envRec* does not already have a binding for *N*.
3. Assert: *M* is a Module Record.
4. Assert: When *M*.[[Environment]] is instantiated it will have a direct binding for *N2*.

5. Create an immutable indirect binding in *envRec* for *N* that references *M* and *N2* as its target binding and record that the binding is initialized.
6. Return NormalCompletion(empty).

8.1.2 Lexical Environment Operations

The following abstract operations are used in this specification to operate upon lexical environments:

8.1.2.1 GetIdentifierReference (*lex*, *name*, *strict*)

The abstract operation GetIdentifierReference is called with a Lexical Environment *lex*, a String *name*, and a Boolean flag *strict*. The value of *lex* may be **null**. When called, the following steps are performed:

1. If *lex* is the value **null**, then
    a. Return a value of type Reference whose base value component is **undefined**, whose referenced name component is *name*, and whose strict reference flag is *strict*.
2. Let *envRec* be *lex*'s EnvironmentRecord.
3. Let *exists* be ? *envRec*.HasBinding(*name*).
4. If *exists* is **true**, then
    a. Return a value of type Reference whose base value component is *envRec*, whose referenced name component is *name*, and whose strict reference flag is *strict*.
5. Else,
    a. Let *outer* be the value of *lex*'s outer environment reference.
    b. Return ? GetIdentifierReference(*outer*, *name*, *strict*).

8.1.2.2 NewDeclarativeEnvironment (*E*)

When the abstract operation NewDeclarativeEnvironment is called with a Lexical Environment as argument *E* the following steps are performed:

1. Let *env* be a new Lexical Environment.
2. Let *envRec* be a new declarative Environment Record containing no bindings.
3. Set *env*'s EnvironmentRecord to *envRec*.
4. Set the outer lexical environment reference of *env* to *E*.
5. Return *env*.

8.1.2.3 NewObjectEnvironment (*O*, *E*)

When the abstract operation NewObjectEnvironment is called with an Object *O* and a Lexical Environment *E* as arguments, the following steps are performed:

1. Let *env* be a new Lexical Environment.
2. Let *envRec* be a new object Environment Record containing *O* as the binding object.
3. Set *env*'s EnvironmentRecord to *envRec*.
4. Set the outer lexical environment reference of *env* to *E*.
5. Return *env*.

8.1.2.4 NewFunctionEnvironment (*F*, *newTarget*)

When the abstract operation NewFunctionEnvironment is called with arguments *F* and *newTarget* the following steps are performed:

1. Assert: *F* is an ECMAScript function.
2. Assert: Type(*newTarget*) is Undefined or Object.
3. Let *env* be a new Lexical Environment.
4. Let *envRec* be a new function Environment Record containing no bindings.
5. Set *envRec*.[[FunctionObject]] to *F*.
6. If *F*.[[ThisMode]] is lexical, set *envRec*.[[ThisBindingStatus]] to lexical.
7. Else, set *envRec*.[[ThisBindingStatus]] to uninitialized.
8. Let *home* be *F*.[[HomeObject]].
9. Set *envRec*.[[HomeObject]] to *home*.
10. Set *envRec*.[[NewTarget]] to *newTarget*.
11. Set *env*'s EnvironmentRecord to *envRec*.
12. Set the outer lexical environment reference of *env* to *F*.[[Environment]].
13. Return *env*.

8.1.2.5 NewGlobalEnvironment (*G*, *thisValue*)

When the abstract operation NewGlobalEnvironment is called with arguments *G* and *thisValue*, the following steps are performed:

1. Let *env* be a new Lexical Environment.
2. Let *objRec* be a new object Environment Record containing *G* as the binding object.
3. Let *dclRec* be a new declarative Environment Record containing no bindings.
4. Let *globalRec* be a new global Environment Record.
5. Set *globalRec*.[[ObjectRecord]] to *objRec*.
6. Set *globalRec*.[[GlobalThisValue]] to *thisValue*.
7. Set *globalRec*.[[DeclarativeRecord]] to *dclRec*.
8. Set *globalRec*.[[VarNames]] to a new empty List.
9. Set *env*'s EnvironmentRecord to *globalRec*.
10. Set the outer lexical environment reference of *env* to **null**.
11. Return *env*.

8.1.2.6 NewModuleEnvironment (*E*)

When the abstract operation NewModuleEnvironment is called with a Lexical Environment argument *E* the following steps are performed:

1. Let *env* be a new Lexical Environment.
2. Let *envRec* be a new module Environment Record containing no bindings.
3. Set *env*'s EnvironmentRecord to *envRec*.
4. Set the outer lexical environment reference of *env* to *E*.
5. Return *env*.

8.2 Realms

Before it is evaluated, all ECMAScript code must be associated with a *realm*. Conceptually, a realm consists of a set of

intrinsic objects, an ECMAScript global environment, all of the ECMAScript code that is loaded within the scope of that global environment, and other associated state and resources.

A realm is represented in this specification as a *Realm Record* with the fields specified in Table 22:

Table 22: Realm Record Fields

Field Name	Value	Meaning
[[Intrinsics]]	Record whose field names are intrinsic keys and whose values are objects	The intrinsic values used by code associated with this realm
[[GlobalObject]]	Object	The global object for this realm
[[GlobalEnv]]	Lexical Environment	The global environment for this realm
[[TemplateMap]]	A List of Record { [[Site]]: Parse Node, [[Array]]: Object }.	Template objects are canonicalized separately for each realm using its Realm Record's [[TemplateMap]]. Each [[Site]] value is a Parse Node that is a *TemplateLiteral*. The associated [[Array]] value is the corresponding template object that is passed to a tag function. NOTE Once a Parse Node becomes unreachable, the corresponding [[Array]] is also unreachable, and it would be unobservable if an implementation removed the pair from the [[TemplateMap]] list.
[[HostDefined]]	Any, default value is **undefined**.	Field reserved for use by host environments that need to associate additional information with a Realm Record.

8.2.1 CreateRealm ( )

The abstract operation CreateRealm with no arguments performs the following steps:

1. Let *realmRec* be a new Realm Record.
2. Perform CreateIntrinsics(*realmRec*).
3. Set *realmRec*.[[GlobalObject]] to **undefined**.
4. Set *realmRec*.[[GlobalEnv]] to **undefined**.
5. Set *realmRec*.[[TemplateMap]] to a new empty List.
6. Return *realmRec*.

8.2.2 CreateIntrinsics (*realmRec*)

The abstract operation CreateIntrinsics with argument *realmRec* performs the following steps:

1. Let *intrinsics* be a new Record.
2. Set *realmRec*.[[Intrinsics]] to *intrinsics*.

3. Set fields of *intrinsics* with the values listed in Table 8. The field names are the names listed in column one of the table. The value of each field is a new object value fully and recursively populated with property values as defined by the specification of each object in clauses 18-26. All object property values are newly created object values. All values that are built-in function objects are created by performing CreateBuiltinFunction(<steps>, <slots>, *realmRec*, <prototype>) where <steps> is the definition of that function provided by this specification, <slots> is a list of the names, if any, of the function's specified internal slots, and <prototype> is the specified value of the function's [[Prototype]] internal slot. The creation of the intrinsics and their properties must be ordered to avoid any dependencies upon objects that have not yet been created.
4. Perform AddRestrictedFunctionProperties(*intrinsics*.[[%Function.prototype%]], *realmRec*).
5. Return *intrinsics*.

8.2.3 SetRealmGlobalObject (*realmRec*, *globalObj*, *thisValue*)

The abstract operation SetRealmGlobalObject with arguments *realmRec*, *globalObj*, and *thisValue* performs the following steps:

1. If *globalObj* is **undefined**, then
    a. Let *intrinsics* be *realmRec*.[[Intrinsics]].
    b. Set *globalObj* to OrdinaryObjectCreate(*intrinsics*.[[%Object.prototype%]]).
2. Assert: Type(*globalObj*) is Object.
3. If *thisValue* is **undefined**, set *thisValue* to *globalObj*.
4. Set *realmRec*.[[GlobalObject]] to *globalObj*.
5. Let *newGlobalEnv* be NewGlobalEnvironment(*globalObj*, *thisValue*).
6. Set *realmRec*.[[GlobalEnv]] to *newGlobalEnv*.
7. Return *realmRec*.

8.2.4 SetDefaultGlobalBindings (*realmRec*)

The abstract operation SetDefaultGlobalBindings with argument *realmRec* performs the following steps:

1. Let *global* be *realmRec*.[[GlobalObject]].
2. For each property of the Global Object specified in clause 18, do
    a. Let *name* be the String value of the property name.
    b. Let *desc* be the fully populated data property descriptor for the property containing the specified attributes for the property. For properties listed in 18.2, 18.3, or 18.4 the value of the [[Value]] attribute is the corresponding intrinsic object from *realmRec*.
    c. Perform ? DefinePropertyOrThrow(*global*, *name*, *desc*).
3. Return *global*.

8.3 Execution Contexts

An *execution context* is a specification device that is used to track the runtime evaluation of code by an ECMAScript implementation. At any point in time, there is at most one execution context per agent that is actually executing code. This is known as the agent's *running execution context*. All references to the running execution context in this specification denote the running execution context of the surrounding agent.

The *execution context stack* is used to track execution contexts. The running execution context is always the top element of this stack. A new execution context is created whenever control is transferred from the executable code associated

with the currently running execution context to executable code that is not associated with that execution context. The newly created execution context is pushed onto the stack and becomes the running execution context.

An execution context contains whatever implementation specific state is necessary to track the execution progress of its associated code. Each execution context has at least the state components listed in Table 23.

Table 23: State Components for All Execution Contexts

Component	Purpose
code evaluation state	Any state needed to perform, suspend, and resume evaluation of the code associated with this execution context.
Function	If this execution context is evaluating the code of a function object, then the value of this component is that function object. If the context is evaluating the code of a *Script* or *Module*, the value is **null**.
Realm	The Realm Record from which associated code accesses ECMAScript resources.
ScriptOrModule	The Module Record or Script Record from which associated code originates. If there is no originating script or module, as is the case for the original execution context created in InitializeHostDefinedRealm, the value is **null**.

Evaluation of code by the running execution context may be suspended at various points defined within this specification. Once the running execution context has been suspended a different execution context may become the running execution context and commence evaluating its code. At some later time a suspended execution context may again become the running execution context and continue evaluating its code at the point where it had previously been suspended. Transition of the running execution context status among execution contexts usually occurs in stack-like last-in/first-out manner. However, some ECMAScript features require non-LIFO transitions of the running execution context.

The value of the Realm component of the running execution context is also called *the current Realm Record*. The value of the Function component of the running execution context is also called the *active function object*.

Execution contexts for ECMAScript code have the additional state components listed in Table 24.

Table 24: Additional State Components for ECMAScript Code Execution Contexts

Component	Purpose
LexicalEnvironment	Identifies the Lexical Environment used to resolve identifier references made by code within this execution context.
VariableEnvironment	Identifies the Lexical Environment whose EnvironmentRecord holds bindings created by *VariableStatement*s within this execution context.

The LexicalEnvironment and VariableEnvironment components of an execution context are always Lexical Environments.

Execution contexts representing the evaluation of generator objects have the additional state components listed in Table 25.

Table 25: Additional State Components for Generator Execution Contexts

Component	Purpose
Generator	The GeneratorObject that this execution context is evaluating.

In most situations only the running execution context (the top of the execution context stack) is directly manipulated by algorithms within this specification. Hence when the terms "LexicalEnvironment", and "VariableEnvironment" are used without qualification they are in reference to those components of the running execution context.

An execution context is purely a specification mechanism and need not correspond to any particular artefact of an ECMAScript implementation. It is impossible for ECMAScript code to directly access or observe an execution context.

8.3.1 GetActiveScriptOrModule ( )

The GetActiveScriptOrModule abstract operation is used to determine the running script or module, based on the running execution context. GetActiveScriptOrModule performs the following steps:

1. If the execution context stack is empty, return **null**.
2. Let *ec* be the topmost execution context on the execution context stack whose ScriptOrModule component is not **null**.
3. If no such execution context exists, return **null**. Otherwise, return *ec*'s ScriptOrModule.

8.3.2 ResolveBinding (*name* [, *env*])

The ResolveBinding abstract operation is used to determine the binding of *name* passed as a String value. The optional argument *env* can be used to explicitly provide the Lexical Environment that is to be searched for the binding. During execution of ECMAScript code, ResolveBinding is performed using the following algorithm:

1. If *env* is not present or if *env* is **undefined**, then
    a. Set *env* to the running execution context's LexicalEnvironment.
2. Assert: *env* is a Lexical Environment.
3. If the code matching the syntactic production that is being evaluated is contained in strict mode code, let *strict* be **true**; else let *strict* be **false**.
4. Return ? GetIdentifierReference(*env*, *name*, *strict*).

NOTE The result of ResolveBinding is always a Reference value with its referenced name component equal to the *name* argument.

8.3.3 GetThisEnvironment ( )

The abstract operation GetThisEnvironment finds the Environment Record that currently supplies the binding of the keyword `this`. GetThisEnvironment performs the following steps:

1. Let *lex* be the running execution context's LexicalEnvironment.
2. Repeat,
    a. Let *envRec* be *lex*'s EnvironmentRecord.

b. Let *exists* be *envRec*.HasThisBinding().
c. If *exists* is **true**, return *envRec*.
d. Let *outer* be the value of *lex*'s outer environment reference.
e. Assert: *outer* is not **null**.
f. Set *lex* to *outer*.

NOTE The loop in step 2 will always terminate because the list of environments always ends with the global environment which has a `this` binding.

8.3.4 ResolveThisBinding ( )

The abstract operation ResolveThisBinding determines the binding of the keyword `this` using the LexicalEnvironment of the running execution context. ResolveThisBinding performs the following steps:

1. Let *envRec* be GetThisEnvironment().
2. Return ? *envRec*.GetThisBinding().

8.3.5 GetNewTarget ( )

The abstract operation GetNewTarget determines the NewTarget value using the LexicalEnvironment of the running execution context. GetNewTarget performs the following steps:

1. Let *envRec* be GetThisEnvironment().
2. Assert: *envRec* has a [[NewTarget]] field.
3. Return *envRec*.[[NewTarget]].

8.3.6 GetGlobalObject ( )

The abstract operation GetGlobalObject returns the global object used by the currently running execution context. GetGlobalObject performs the following steps:

1. Let *currentRealm* be the current Realm Record.
2. Return *currentRealm*.[[GlobalObject]].

8.4 Jobs and Host Operations to Enqueue Jobs

A *Job* is an abstract closure with no parameters that initiates an ECMAScript computation when no other ECMAScript computation is currently in progress.

Jobs are scheduled for execution by ECMAScript host environments. This specification describes the host hook HostEnqueuePromiseJob to schedule one kind of job; host environments may define additional abstract operations which schedule jobs. Such operations accept a Job abstract closure as the parameter and schedule it to be performed at some future time. Their implementations must conform to the following requirements:

- At some future point in time, when there is no running execution context and the execution context stack is empty, the implementation must:
    1. Push an execution context onto the execution context stack.

    2. Perform any implementation-defined preparation steps.
    3. Call the abstract closure.
    4. Perform any implementation-defined cleanup steps.
    5. Pop the previously-pushed execution context from the execution context stack.
- Only one Job may be actively undergoing evaluation at any point in time.
- Once evaluation of a Job starts, it must run to completion before evaluation of any other Job starts.
- The abstract closure must return a normal completion, implementing its own handling of errors.

> NOTE Host environments are not required to treat Jobs uniformly with respect to scheduling. For example, web browsers and Node.js treat Promise-handling Jobs as a higher priority than other work; future features may add Jobs that are not treated at such a high priority.

8.4.1 HostEnqueuePromiseJob (*job*, *realm*)

HostEnqueuePromiseJob is a host-defined abstract operation that schedules the Job abstract closure *job* to be performed, at some future time. The abstract closures used with this algorithm are intended to be related to the handling of Promises, or otherwise, to be scheduled with equal priority to Promise handling operations.

The *realm* parameter is passed through to hosts with no normative requirements; it is either **null** or a Realm.

> NOTE The *realm* for PromiseResolveThenableJobs is the result of calling GetFunctionRealm on the *then* function object. The *realm* for PromiseReactionJobs is the result of calling GetFunctionRealm on the handler if the handler is not **undefined**. Otherwise the *realm* is **null**. The WHATWG HTML specification, for example, uses *realm* to check for ability to run script and to prepare to run script.

The implementation of HostEnqueuePromiseJob must conform to the requirements in 8.4. Additionally, Jobs must be scheduled in FIFO order, with Jobs running in the same order as the HostEnqueuePromiseJob invocations which scheduled them.

8.5 InitializeHostDefinedRealm ( )

The abstract operation InitializeHostDefinedRealm performs the following steps:

1. Let *realm* be CreateRealm().
2. Let *newContext* be a new execution context.
3. Set the Function of *newContext* to **null**.
4. Set the Realm of *newContext* to *realm*.
5. Set the ScriptOrModule of *newContext* to **null**.
6. Push *newContext* onto the execution context stack; *newContext* is now the running execution context.
7. If the host requires use of an exotic object to serve as *realm*'s global object, let *global* be such an object created in an implementation-defined manner. Otherwise, let *global* be **undefined**, indicating that an ordinary object should be created as the global object.
8. If the host requires that the `this` binding in *realm*'s global scope return an object other than the global object, let *thisValue* be such an object created in an implementation-defined manner. Otherwise, let *thisValue* be **undefined**, indicating that *realm*'s global `this` binding should be the global object.
9. Perform SetRealmGlobalObject(*realm*, *global*, *thisValue*).

10. Let *globalObj* be ? SetDefaultGlobalBindings(*realm*).
11. Create any implementation-defined global object properties on *globalObj*.
12. Return NormalCompletion(empty).

8.6 Agents

An *agent* comprises a set of ECMAScript execution contexts, an execution context stack, a running execution context, an *Agent Record*, and an *executing thread*. Except for the executing thread, the constituents of an agent belong exclusively to that agent.

An agent's executing thread executes a job on the agent's execution contexts independently of other agents, except that an executing thread may be used as the executing thread by multiple agents, provided none of the agents sharing the thread have an Agent Record whose [[CanBlock]] property is **true**.

NOTE 1 Some web browsers share a single executing thread across multiple unrelated tabs of a browser window, for example.

While an agent's executing thread executes jobs, the agent is the *surrounding agent* for the code in those jobs. The code uses the surrounding agent to access the specification level execution objects held within the agent: the running execution context, the execution context stack, and the Agent Record's fields.

Table 26: Agent Record Fields

Field Name	Value	Meaning
[[LittleEndian]]	Boolean	The default value computed for the *isLittleEndian* parameter when it is needed by the algorithms GetValueFromBuffer and SetValueInBuffer. The choice is implementation-dependent and should be the alternative that is most efficient for the implementation. Once the value has been observed it cannot change.
[[CanBlock]]	Boolean	Determines whether the agent can block or not.
[[Signifier]]	Any globally-unique value	Uniquely identifies the agent within its agent cluster.
[[IsLockFree1]]	Boolean	**true** if atomic operations on one-byte values are lock-free, **false** otherwise.
[[IsLockFree2]]	Boolean	**true** if atomic operations on two-byte values are lock-free, **false** otherwise.
[[IsLockFree8]]	Boolean	**true** if atomic operations on eight-byte values are lock-free, **false** otherwise.
[[CandidateExecution]]	A candidate execution Record	See the memory model.

Once the values of [[Signifier]], [[IsLockFree1]], and [[IsLockFree2]] have been observed by any agent in the agent

cluster they cannot change.

NOTE 2 The values of [[IsLockFree1]] and [[IsLockFree2]] are not necessarily determined by the hardware, but may also reflect implementation choices that can vary over time and between ECMAScript implementations.

There is no [[IsLockFree4]] property: 4-byte atomic operations are always lock-free.

In practice, if an atomic operation is implemented with any type of lock the operation is not lock-free. Lock-free does not imply wait-free: there is no upper bound on how many machine steps may be required to complete a lock-free atomic operation.

That an atomic access of size *n* is lock-free does not imply anything about the (perceived) atomicity of non-atomic accesses of size *n*, specifically, non-atomic accesses may still be performed as a sequence of several separate memory accesses. See ReadSharedMemory and WriteSharedMemory for details.

NOTE 3 An agent is a specification mechanism and need not correspond to any particular artefact of an ECMAScript implementation.

8.6.1 AgentSignifier ( )

The abstract operation AgentSignifier takes no arguments. It performs the following steps:

1. Let *AR* be the Agent Record of the surrounding agent.
2. Return *AR*.[[Signifier]].

8.6.2 AgentCanSuspend ( )

The abstract operation AgentCanSuspend takes no arguments. It performs the following steps:

1. Let *AR* be the Agent Record of the surrounding agent.
2. Return *AR*.[[CanBlock]].

NOTE In some environments it may not be reasonable for a given agent to suspend. For example, in a web browser environment, it may be reasonable to disallow suspending a document's main event handling thread, while still allowing workers' event handling threads to suspend.

8.7 Agent Clusters

An *agent cluster* is a maximal set of agents that can communicate by operating on shared memory.

NOTE 1 Programs within different agents may share memory by unspecified means. At a minimum, the backing memory for SharedArrayBuffer objects can be shared among the agents in the cluster.

There may be agents that can communicate by message passing that cannot share memory; they are never in the same agent cluster.

Every agent belongs to exactly one agent cluster.

NOTE 2 The agents in a cluster need not all be alive at some particular point in time. If agent **A** creates another agent **B**, after which **A** terminates and **B** creates agent **C**, the three agents are in the same cluster if **A** could share some memory with **B** and **B** could share some memory with **C**.

All agents within a cluster must have the same value for the [[LittleEndian]] property in their respective Agent Records.

NOTE 3 If different agents within an agent cluster have different values of [[LittleEndian]] it becomes hard to use shared memory for multi-byte data.

All agents within a cluster must have the same values for the [[IsLockFree1]] property in their respective Agent Records; similarly for the [[IsLockFree2]] property.

All agents within a cluster must have different values for the [[Signifier]] property in their respective Agent Records.

An embedding may deactivate (stop forward progress) or activate (resume forward progress) an agent without the agent's knowledge or cooperation. If the embedding does so, it must not leave some agents in the cluster active while other agents in the cluster are deactivated indefinitely.

NOTE 4 The purpose of the preceding restriction is to avoid a situation where an agent deadlocks or starves because another agent has been deactivated. For example, if an HTML shared worker that has a lifetime independent of documents in any windows were allowed to share memory with the dedicated worker of such an independent document, and the document and its dedicated worker were to be deactivated while the dedicated worker holds a lock (say, the document is pushed into its window's history), and the shared worker then tries to acquire the lock, then the shared worker will be blocked until the dedicated worker is activated again, if ever. Meanwhile other workers trying to access the shared worker from other windows will starve.

The implication of the restriction is that it will not be possible to share memory between agents that don't belong to the same suspend/wake collective within the embedding.

An embedding may terminate an agent without any of the agent's cluster's other agents' prior knowledge or cooperation. If an agent is terminated not by programmatic action of its own or of another agent in the cluster but by forces external to the cluster, then the embedding must choose one of two strategies: Either terminate all the agents in the cluster, or provide reliable APIs that allow the agents in the cluster to coordinate so that at least one remaining member of the cluster will be able to detect the termination, with the termination data containing enough information to identify the agent that was terminated.

NOTE 5 Examples of that type of termination are: operating systems or users terminating agents that are running in separate processes; the embedding itself terminating an agent that is running in-process with the other agents when per-agent resource accounting indicates that the agent is runaway.

Prior to any evaluation of any ECMAScript code by any agent in a cluster, the [[CandidateExecution]] field of the Agent Record for all agents in the cluster is set to the initial candidate execution. The initial candidate execution is an empty candidate execution whose [[EventsRecords]] field is a List containing, for each agent, an Agent Events Record whose [[AgentSignifier]] field is that agent's signifier, and whose [[EventList]] and [[AgentSynchronizesWith]] fields are empty Lists.

NOTE 6 All agents in an agent cluster share the same candidate execution in its Agent Record's [[CandidateExecution]] field. The candidate execution is a specification mechanism used by the memory model.

NOTE 7 An agent cluster is a specification mechanism and need not correspond to any particular artefact of an ECMAScript implementation.

8.8 Forward Progress

For an agent to *make forward progress* is for it to perform an evaluation step according to this specification.

An agent becomes *blocked* when its running execution context waits synchronously and indefinitely for an external event. Only agents whose Agent Record's [[CanBlock]] property is **true** can become blocked in this sense. An *unblocked* agent is one that is not blocked.

Implementations must ensure that:

- every unblocked agent with a dedicated executing thread eventually makes forward progress
- in a set of agents that share an executing thread, one agent eventually makes forward progress
- an agent does not cause another agent to become blocked except via explicit APIs that provide blocking.

NOTE This, along with the liveness guarantee in the memory model, ensures that all SeqCst writes eventually become observable to all agents.

9 Ordinary and Exotic Objects Behaviours

9.1 Ordinary Object Internal Methods and Internal Slots

All ordinary objects have an internal slot called [[Prototype]]. The value of this internal slot is either **null** or an object and is used for implementing inheritance. Data properties of the [[Prototype]] object are inherited (and visible as properties of the child object) for the purposes of get access, but not for set access. Accessor properties are inherited

for both get access and set access.

Every ordinary object has a Boolean-valued [[Extensible]] internal slot which is used to fulfill the extensibility-related internal method invariants specified in 6.1.7.3. Namely, once the value of an object's [[Extensible]] internal slot has been set to **false**, it is no longer possible to add properties to the object, to modify the value of the object's [[Prototype]] internal slot, or to subsequently change the value of [[Extensible]] to **true**.

In the following algorithm descriptions, assume *O* is an ordinary object, *P* is a property key value, *V* is any ECMAScript language value, and *Desc* is a Property Descriptor record.

Each ordinary object internal method delegates to a similarly-named abstract operation. If such an abstract operation depends on another internal method, then the internal method is invoked on *O* rather than calling the similarly-named abstract operation directly. These semantics ensure that exotic objects have their overridden internal methods invoked when ordinary object internal methods are applied to them.

9.1.1 [[GetPrototypeOf]] ( )

When the [[GetPrototypeOf]] internal method of *O* is called, the following steps are taken:

1. Return ! OrdinaryGetPrototypeOf(*O*).

9.1.1.1 OrdinaryGetPrototypeOf (*O*)

When the abstract operation OrdinaryGetPrototypeOf is called with Object *O*, the following steps are taken:

1. Return *O*.[[Prototype]].

9.1.2 [[SetPrototypeOf]] (*V*)

When the [[SetPrototypeOf]] internal method of *O* is called with argument *V*, the following steps are taken:

1. Return ! OrdinarySetPrototypeOf(*O*, *V*).

9.1.2.1 OrdinarySetPrototypeOf (*O*, *V*)

When the abstract operation OrdinarySetPrototypeOf is called with Object *O* and value *V*, the following steps are taken:

1. Assert: Either Type(*V*) is Object or Type(*V*) is Null.
2. Let *current* be *O*.[[Prototype]].
3. If SameValue(*V*, *current*) is **true**, return **true**.
4. Let *extensible* be *O*.[[Extensible]].
5. If *extensible* is **false**, return **false**.
6. Let *p* be *V*.
7. Let *done* be **false**.
8. Repeat, while *done* is **false**,
    a. If *p* is **null**, set *done* to **true**.
    b. Else if SameValue(*p*, *O*) is **true**, return **false**.
    c. Else,
        i. If *p*.[[GetPrototypeOf]] is not the ordinary object internal method defined in 9.1.1, set *done* to **true**.

ii. Else, set p to p.[[Prototype]].

9. Set O.[[Prototype]] to V.
10. Return **true**.

NOTE The loop in step 8 guarantees that there will be no circularities in any prototype chain that only includes objects that use the ordinary object definitions for [[GetPrototypeOf]] and [[SetPrototypeOf]].

9.1.3 [[IsExtensible]] ( )

When the [[IsExtensible]] internal method of O is called, the following steps are taken:

1. Return ! OrdinaryIsExtensible(O).

9.1.3.1 OrdinaryIsExtensible (*O*)

When the abstract operation OrdinaryIsExtensible is called with Object O, the following steps are taken:

1. Return O.[[Extensible]].

9.1.4 [[PreventExtensions]] ( )

When the [[PreventExtensions]] internal method of O is called, the following steps are taken:

1. Return ! OrdinaryPreventExtensions(O).

9.1.4.1 OrdinaryPreventExtensions (*O*)

When the abstract operation OrdinaryPreventExtensions is called with Object O, the following steps are taken:

1. Set O.[[Extensible]] to **false**.
2. Return **true**.

9.1.5 [[GetOwnProperty]] (*P*)

When the [[GetOwnProperty]] internal method of O is called with property key P, the following steps are taken:

1. Return ! OrdinaryGetOwnProperty(O, P).

9.1.5.1 OrdinaryGetOwnProperty (*O*, *P*)

When the abstract operation OrdinaryGetOwnProperty is called with Object O and with property key P, the following steps are taken:

1. Assert: IsPropertyKey(P) is **true**.
2. If O does not have an own property with key P, return **undefined**.
3. Let D be a newly created Property Descriptor with no fields.
4. Let X be O's own property whose key is P.
5. If X is a data property, then

    a. Set *D*.[[Value]] to the value of *X*'s [[Value]] attribute.
    b. Set *D*.[[Writable]] to the value of *X*'s [[Writable]] attribute.
6. Else,
    a. Assert: *X* is an accessor property.
    b. Set *D*.[[Get]] to the value of *X*'s [[Get]] attribute.
    c. Set *D*.[[Set]] to the value of *X*'s [[Set]] attribute.
7. Set *D*.[[Enumerable]] to the value of *X*'s [[Enumerable]] attribute.
8. Set *D*.[[Configurable]] to the value of *X*'s [[Configurable]] attribute.
9. Return *D*.

9.1.6 [[DefineOwnProperty]] (*P*, *Desc*)

When the [[DefineOwnProperty]] internal method of *O* is called with property key *P* and Property Descriptor *Desc*, the following steps are taken:

1. Return ? OrdinaryDefineOwnProperty(*O*, *P*, *Desc*).

9.1.6.1 OrdinaryDefineOwnProperty (*O*, *P*, *Desc*)

When the abstract operation OrdinaryDefineOwnProperty is called with Object *O*, property key *P*, and Property Descriptor *Desc*, the following steps are taken:

1. Let *current* be ? *O*.[[GetOwnProperty]](*P*).
2. Let *extensible* be ? IsExtensible(*O*).
3. Return ValidateAndApplyPropertyDescriptor(*O*, *P*, *extensible*, *Desc*, *current*).

9.1.6.2 IsCompatiblePropertyDescriptor (*Extensible*, *Desc*, *Current*)

When the abstract operation IsCompatiblePropertyDescriptor is called with Boolean value *Extensible*, and Property Descriptors *Desc*, and *Current*, the following steps are taken:

1. Return ValidateAndApplyPropertyDescriptor(**undefined**, **undefined**, *Extensible*, *Desc*, *Current*).

9.1.6.3 ValidateAndApplyPropertyDescriptor (*O*, *P*, *extensible*, *Desc*, *current*)

When the abstract operation ValidateAndApplyPropertyDescriptor is called with Object *O*, property key *P*, Boolean value *extensible*, and Property Descriptors *Desc*, and *current*, the following steps are taken:

> NOTE If **undefined** is passed as *O*, only validation is performed and no object updates are performed.

1. Assert: If *O* is not **undefined**, then IsPropertyKey(*P*) is **true**.
2. If *current* is **undefined**, then
    a. If *extensible* is **false**, return **false**.
    b. Assert: *extensible* is **true**.
    c. If IsGenericDescriptor(*Desc*) is **true** or IsDataDescriptor(*Desc*) is **true**, then
        i. If *O* is not **undefined**, create an own data property named *P* of object *O* whose [[Value]], [[Writable]], [[Enumerable]], and [[Configurable]] attribute values are described by *Desc*. If the value of an attribute field of *Desc* is absent, the attribute of the newly created property is set to its

default value.

d. Else,

i. Assert: ! IsAccessorDescriptor(*Desc*) is **true**.

ii. If *O* is not **undefined**, create an own accessor property named *P* of object *O* whose [[Get]], [[Set]], [[Enumerable]], and [[Configurable]] attribute values are described by *Desc*. If the value of an attribute field of *Desc* is absent, the attribute of the newly created property is set to its default value.

e. Return **true**.

3. If every field in *Desc* is absent, return **true**.
4. If *current*.[[Configurable]] is **false**, then
   a. If *Desc*.[[Configurable]] is present and its value is **true**, return **false**.
   b. If *Desc*.[[Enumerable]] is present and ! SameValue(*Desc*.[[Enumerable]], *current*.[[Enumerable]]) is **false**, return **false**.
5. If ! IsGenericDescriptor(*Desc*) is **true**, then
   a. NOTE: No further validation is required.
6. Else if ! SameValue(! IsDataDescriptor(*current*), ! IsDataDescriptor(*Desc*)) is **false**, then
   a. If *current*.[[Configurable]] is **false**, return **false**.
   b. If IsDataDescriptor(*current*) is **true**, then
      i. If *O* is not **undefined**, convert the property named *P* of object *O* from a data property to an accessor property. Preserve the existing values of the converted property's [[Configurable]] and [[Enumerable]] attributes and set the rest of the property's attributes to their default values.
   c. Else,
      i. If *O* is not **undefined**, convert the property named *P* of object *O* from an accessor property to a data property. Preserve the existing values of the converted property's [[Configurable]] and [[Enumerable]] attributes and set the rest of the property's attributes to their default values.
7. Else if IsDataDescriptor(*current*) and IsDataDescriptor(*Desc*) are both **true**, then
   a. If *current*.[[Configurable]] is **false** and *current*.[[Writable]] is **false**, then
      i. If *Desc*.[[Writable]] is present and *Desc*.[[Writable]] is **true**, return **false**.
      ii. If *Desc*.[[Value]] is present and SameValue(*Desc*.[[Value]], *current*.[[Value]]) is **false**, return **false**.
      iii. Return **true**.
8. Else,
   a. Assert: ! IsAccessorDescriptor(*current*) and ! IsAccessorDescriptor(*Desc*) are both **true**.
   b. If *current*.[[Configurable]] is **false**, then
      i. If *Desc*.[[Set]] is present and SameValue(*Desc*.[[Set]], *current*.[[Set]]) is **false**, return **false**.
      ii. If *Desc*.[[Get]] is present and SameValue(*Desc*.[[Get]], *current*.[[Get]]) is **false**, return **false**.
      iii. Return **true**.
9. If *O* is not **undefined**, then
   a. For each field of *Desc* that is present, set the corresponding attribute of the property named *P* of object *O* to the value of the field.
10. Return **true**.

9.1.7 [[HasProperty]] (*P*)

When the [[HasProperty]] internal method of *O* is called with property key *P*, the following steps are taken:

1. Return ? OrdinaryHasProperty(*O*, *P*).

9.1.7.1 OrdinaryHasProperty (*O*, *P*)

When the abstract operation OrdinaryHasProperty is called with Object *O* and with property key *P*, the following steps are taken:

1. Assert: IsPropertyKey(*P*) is **true**.
2. Let *hasOwn* be ? *O*.[[GetOwnProperty]](*P*).
3. If *hasOwn* is not **undefined**, return **true**.
4. Let *parent* be ? *O*.[[GetPrototypeOf]]().
5. If *parent* is not **null**, then
    a. Return ? *parent*.[[HasProperty]](*P*).
6. Return **false**.

9.1.8 [[Get]] (*P*, *Receiver*)

When the [[Get]] internal method of *O* is called with property key *P* and ECMAScript language value *Receiver*, the following steps are taken:

1. Return ? OrdinaryGet(*O*, *P*, *Receiver*).

9.1.8.1 OrdinaryGet (*O*, *P*, *Receiver*)

When the abstract operation OrdinaryGet is called with Object *O*, property key *P*, and ECMAScript language value *Receiver*, the following steps are taken:

1. Assert: IsPropertyKey(*P*) is **true**.
2. Let *desc* be ? *O*.[[GetOwnProperty]](*P*).
3. If *desc* is **undefined**, then
    a. Let *parent* be ? *O*.[[GetPrototypeOf]]().
    b. If *parent* is **null**, return **undefined**.
    c. Return ? *parent*.[[Get]](*P*, *Receiver*).
4. If IsDataDescriptor(*desc*) is **true**, return *desc*.[[Value]].
5. Assert: IsAccessorDescriptor(*desc*) is **true**.
6. Let *getter* be *desc*.[[Get]].
7. If *getter* is **undefined**, return **undefined**.
8. Return ? Call(*getter*, *Receiver*).

9.1.9 [[Set]] (*P*, *V*, *Receiver*)

When the [[Set]] internal method of *O* is called with property key *P*, value *V*, and ECMAScript language value *Receiver*, the following steps are taken:

1. Return ? OrdinarySet(*O*, *P*, *V*, *Receiver*).

9.1.9.1 OrdinarySet (*O*, *P*, *V*, *Receiver*)

When the abstract operation OrdinarySet is called with Object *O*, property key *P*, value *V*, and ECMAScript language value *Receiver*, the following steps are taken:

1. Assert: IsPropertyKey(*P*) is **true**.
2. Let *ownDesc* be ? *O*.[[GetOwnProperty]](*P*).

3. Return OrdinarySetWithOwnDescriptor(*O*, *P*, *V*, *Receiver*, *ownDesc*).

9.1.9.2 OrdinarySetWithOwnDescriptor (*O*, *P*, *V*, *Receiver*, *ownDesc*)

When the abstract operation OrdinarySetWithOwnDescriptor is called with Object *O*, property key *P*, value *V*, ECMAScript language value *Receiver*, and Property Descriptor (or **undefined**) *ownDesc*, the following steps are taken:

1. Assert: IsPropertyKey(*P*) is **true**.
2. If *ownDesc* is **undefined**, then
    a. Let *parent* be ? *O*.[[GetPrototypeOf]]().
    b. If *parent* is not **null**, then
        i. Return ? *parent*.[[Set]](*P*, *V*, *Receiver*).
    c. Else,
        i. Set *ownDesc* to the PropertyDescriptor { [[Value]]: **undefined**, [[Writable]]: **true**, [[Enumerable]]: **true**, [[Configurable]]: **true** }.
3. If IsDataDescriptor(*ownDesc*) is **true**, then
    a. If *ownDesc*.[[Writable]] is **false**, return **false**.
    b. If Type(*Receiver*) is not Object, return **false**.
    c. Let *existingDescriptor* be ? *Receiver*.[[GetOwnProperty]](*P*).
    d. If *existingDescriptor* is not **undefined**, then
        i. If IsAccessorDescriptor(*existingDescriptor*) is **true**, return **false**.
        ii. If *existingDescriptor*.[[Writable]] is **false**, return **false**.
        iii. Let *valueDesc* be the PropertyDescriptor { [[Value]]: *V* }.
        iv. Return ? *Receiver*.[[DefineOwnProperty]](*P*, *valueDesc*).
    e. Else,
        i. Assert: *Receiver* does not currently have a property *P*.
        ii. Return ? CreateDataProperty(*Receiver*, *P*, *V*).
4. Assert: IsAccessorDescriptor(*ownDesc*) is **true**.
5. Let *setter* be *ownDesc*.[[Set]].
6. If *setter* is **undefined**, return **false**.
7. Perform ? Call(*setter*, *Receiver*, « *V* »).
8. Return **true**.

9.1.10 [[Delete]] (*P*)

When the [[Delete]] internal method of *O* is called with property key *P*, the following steps are taken:

1. Return ? OrdinaryDelete(*O*, *P*).

9.1.10.1 OrdinaryDelete (*O*, *P*)

When the abstract operation OrdinaryDelete is called with Object *O* and property key *P*, the following steps are taken:

1. Assert: IsPropertyKey(*P*) is **true**.
2. Let *desc* be ? *O*.[[GetOwnProperty]](*P*).
3. If *desc* is **undefined**, return **true**.
4. If *desc*.[[Configurable]] is **true**, then
    a. Remove the own property with name *P* from *O*.
    b. Return **true**.

5. Return **false**.

9.1.11 [[OwnPropertyKeys]] ( )

When the [[OwnPropertyKeys]] internal method of *O* is called, the following steps are taken:

1. Return ! OrdinaryOwnPropertyKeys(*O*).

9.1.11.1 OrdinaryOwnPropertyKeys (*O*)

When the abstract operation OrdinaryOwnPropertyKeys is called with Object *O*, the following steps are taken:

1. Let *keys* be a new empty List.
2. For each own property key *P* of *O* such that *P* is an array index, in ascending numeric index order, do
   a. Add *P* as the last element of *keys*.
3. For each own property key *P* of *O* such that Type(*P*) is String and *P* is not an array index, in ascending chronological order of property creation, do
   a. Add *P* as the last element of *keys*.
4. For each own property key *P* of *O* such that Type(*P*) is Symbol, in ascending chronological order of property creation, do
   a. Add *P* as the last element of *keys*.
5. Return *keys*.

9.1.12 OrdinaryObjectCreate (*proto* [, *additionalInternalSlotsList*])

The abstract operation OrdinaryObjectCreate with argument *proto* (an object or **null**) is used to specify the runtime creation of new ordinary objects. The optional argument *additionalInternalSlotsList* is a List of the names of additional internal slots that must be defined as part of the object, beyond [[Prototype]] and [[Extensible]]. If the list is not provided, a new empty List is used. This abstract operation performs the following steps:

1. Let *internalSlotsList* be « [[Prototype]], [[Extensible]] ».
2. If *additionalInternalSlotsList* is present, append each of its elements to *internalSlotsList*.
3. Let *O* be ! MakeBasicObject(*internalSlotsList*).
4. Set *O*.[[Prototype]] to *proto*.
5. Return *O*.

NOTE Although OrdinaryObjectCreate does little more than call MakeBasicObject, its use communicates the intention to create an ordinary object, and not an exotic one. Thus, within this specification, it is not called by any algorithm that subsequently modifies the internal methods of the object in ways that would make the result non-ordinary. Operations that create exotic objects invoke MakeBasicObject directly.

9.1.13 OrdinaryCreateFromConstructor (*constructor*, *intrinsicDefaultProto* [, *internalSlotsList*])

The abstract operation OrdinaryCreateFromConstructor creates an ordinary object whose [[Prototype]] value is retrieved from a constructor's **"prototype"** property, if it exists. Otherwise the intrinsic named by *intrinsicDefaultProto* is used for [[Prototype]]. The optional *internalSlotsList* is a List of the names of additional internal slots that must be

defined as part of the object. If the list is not provided, a new empty List is used. This abstract operation performs the following steps:

1. Assert: *intrinsicDefaultProto* is a String value that is this specification's name of an intrinsic object. The corresponding object must be an intrinsic that is intended to be used as the [[Prototype]] value of an object.
2. Let *proto* be ? GetPrototypeFromConstructor(*constructor*, *intrinsicDefaultProto*).
3. Return OrdinaryObjectCreate(*proto*, *internalSlotsList*).

9.1.14 GetPrototypeFromConstructor (*constructor*, *intrinsicDefaultProto*)

The abstract operation GetPrototypeFromConstructor determines the [[Prototype]] value that should be used to create an object corresponding to a specific constructor. The value is retrieved from the constructor's **"prototype"** property, if it exists. Otherwise the intrinsic named by *intrinsicDefaultProto* is used for [[Prototype]]. This abstract operation performs the following steps:

1. Assert: *intrinsicDefaultProto* is a String value that is this specification's name of an intrinsic object. The corresponding object must be an intrinsic that is intended to be used as the [[Prototype]] value of an object.
2. Assert: IsCallable(*constructor*) is **true**.
3. Let *proto* be ? Get(*constructor*, **"prototype"**).
4. If Type(*proto*) is not Object, then
   a. Let *realm* be ? GetFunctionRealm(*constructor*).
   b. Set *proto* to *realm*'s intrinsic object named *intrinsicDefaultProto*.
5. Return *proto*.

NOTE If *constructor* does not supply a [[Prototype]] value, the default value that is used is obtained from the realm of the *constructor* function rather than from the running execution context.

9.1.15 RequireInternalSlot (*O*, *internalSlot*)

The abstract operation RequireInternalSlot throws an exception unless *O* is an Object and has the given internal slot.

1. If Type(*O*) is not Object, throw a **TypeError** exception.
2. If *O* does not have an *internalSlot* internal slot, throw a **TypeError** exception.

9.2 ECMAScript Function Objects

ECMAScript function objects encapsulate parameterized ECMAScript code closed over a lexical environment and support the dynamic evaluation of that code. An ECMAScript function object is an ordinary object and has the same internal slots and the same internal methods as other ordinary objects. The code of an ECMAScript function object may be either strict mode code (10.2.1) or non-strict code. An ECMAScript function object whose code is strict mode code is called a *strict function*. One whose code is not strict mode code is called a *non-strict function*.

In addition to [[Extensible]] and [[Prototype]], ECMAScript function objects also have the internal slots listed in Table 27.

Table 27: Internal Slots of ECMAScript Function Objects

Internal Slot	Type	Description
[[Environment]]	Lexical Environment	The Lexical Environment that the function was closed over. Used as the outer environment when evaluating the code of the function.
[[FormalParameters]]	Parse Node	The root parse node of the source text that defines the function's formal parameter list.
[[ECMAScriptCode]]	Parse Node	The root parse node of the source text that defines the function's body.
[[ConstructorKind]]	base | derived	Whether or not the function is a derived class constructor.
[[Realm]]	Realm Record	The realm in which the function was created and which provides any intrinsic objects that are accessed when evaluating the function.
[[ScriptOrModule]]	Script Record or Module Record	The script or module in which the function was created.
[[ThisMode]]	lexical | strict | global	Defines how `this` references are interpreted within the formal parameters and code body of the function. lexical means that `this` refers to the **this** value of a lexically enclosing function. strict means that the **this** value is used exactly as provided by an invocation of the function. global means that a **this** value of **undefined** is interpreted as a reference to the global object.
[[Strict]]	Boolean	**true** if this is a strict function, **false** if this is a non-strict function.
[[HomeObject]]	Object	If the function uses `super`, this is the object whose [[GetPrototypeOf]] provides the object where `super` property lookups begin.
[[SourceText]]	sequence of Unicode code points	The source text that defines the function.
[[IsClassConstructor]]	Boolean	Indicates whether the function is a class constructor. (If **true**, invoking the function's [[Call]] will immediately throw a **TypeError** exception.)

All ECMAScript function objects have the [[Call]] internal method defined here. ECMAScript functions that are also constructors in addition have the [[Construct]] internal method.

9.2.1 [[Call]] (*thisArgument*, *argumentsList*)

The [[Call]] internal method for an ECMAScript function object *F* is called with parameters *thisArgument* and *argumentsList*, a List of ECMAScript language values. The following steps are taken:

1. Assert: *F* is an ECMAScript function object.
2. If *F*.[[IsClassConstructor]] is **true**, throw a **TypeError** exception.

3. Let *callerContext* be the running execution context.
4. Let *calleeContext* be PrepareForOrdinaryCall(*F*, **undefined**).
5. Assert: *calleeContext* is now the running execution context.
6. Perform OrdinaryCallBindThis(*F*, *calleeContext*, *thisArgument*).
7. Let *result* be OrdinaryCallEvaluateBody(*F*, *argumentsList*).
8. Remove *calleeContext* from the execution context stack and restore *callerContext* as the running execution context.
9. If *result*.[[Type]] is return, return NormalCompletion(*result*.[[Value]]).
10. ReturnIfAbrupt(*result*).
11. Return NormalCompletion(**undefined**).

NOTE When *calleeContext* is removed from the execution context stack in step 8 it must not be destroyed if it is suspended and retained for later resumption by an accessible generator object.

9.2.1.1 PrepareForOrdinaryCall (*F*, *newTarget*)

When the abstract operation PrepareForOrdinaryCall is called with function object *F* and ECMAScript language value *newTarget*, the following steps are taken:

1. Assert: Type(*newTarget*) is Undefined or Object.
2. Let *callerContext* be the running execution context.
3. Let *calleeContext* be a new ECMAScript code execution context.
4. Set the Function of *calleeContext* to *F*.
5. Let *calleeRealm* be *F*.[[Realm]].
6. Set the Realm of *calleeContext* to *calleeRealm*.
7. Set the ScriptOrModule of *calleeContext* to *F*.[[ScriptOrModule]].
8. Let *localEnv* be NewFunctionEnvironment(*F*, *newTarget*).
9. Set the LexicalEnvironment of *calleeContext* to *localEnv*.
10. Set the VariableEnvironment of *calleeContext* to *localEnv*.
11. If *callerContext* is not already suspended, suspend *callerContext*.
12. Push *calleeContext* onto the execution context stack; *calleeContext* is now the running execution context.
13. NOTE: Any exception objects produced after this point are associated with *calleeRealm*.
14. Return *calleeContext*.

9.2.1.2 OrdinaryCallBindThis (*F*, *calleeContext*, *thisArgument*)

When the abstract operation OrdinaryCallBindThis is called with function object *F*, execution context *calleeContext*, and ECMAScript value *thisArgument*, the following steps are taken:

1. Let *thisMode* be *F*.[[ThisMode]].
2. If *thisMode* is lexical, return NormalCompletion(**undefined**).
3. Let *calleeRealm* be *F*.[[Realm]].
4. Let *localEnv* be the LexicalEnvironment of *calleeContext*.
5. If *thisMode* is strict, let *thisValue* be *thisArgument*.
6. Else,
    a. If *thisArgument* is **undefined** or **null**, then
        i. Let *globalEnv* be *calleeRealm*.[[GlobalEnv]].
        ii. Let *globalEnvRec* be *globalEnv*'s EnvironmentRecord.

iii. Assert: *globalEnvRec* is a global Environment Record.
iv. Let *thisValue* be *globalEnvRec*.[[GlobalThisValue]].

b. Else,
i. Let *thisValue* be ! ToObject(*thisArgument*).
ii. NOTE: ToObject produces wrapper objects using *calleeRealm*.

7. Let *envRec* be *localEnv*'s EnvironmentRecord.
8. Assert: *envRec* is a function Environment Record.
9. Assert: The next step never returns an abrupt completion because *envRec*.[[ThisBindingStatus]] is not initialized.
10. Return *envRec*.BindThisValue(*thisValue*).

9.2.1.3 OrdinaryCallEvaluateBody (*F*, *argumentsList*)

When the abstract operation OrdinaryCallEvaluateBody is called with function object *F* and List *argumentsList*, the following steps are taken:

1. Return the result of EvaluateBody of the parsed code that is *F*.[[ECMAScriptCode]] passing *F* and *argumentsList* as the arguments.

9.2.2 [[Construct]] (*argumentsList*, *newTarget*)

The [[Construct]] internal method for an ECMAScript function object *F* is called with parameters *argumentsList* and *newTarget*. *argumentsList* is a possibly empty List of ECMAScript language values. The following steps are taken:

1. Assert: *F* is an ECMAScript function object.
2. Assert: Type(*newTarget*) is Object.
3. Let *callerContext* be the running execution context.
4. Let *kind* be *F*.[[ConstructorKind]].
5. If *kind* is base, then
   a. Let *thisArgument* be ? OrdinaryCreateFromConstructor(*newTarget*, "%**Object.prototype**%").
6. Let *calleeContext* be PrepareForOrdinaryCall(*F*, *newTarget*).
7. Assert: *calleeContext* is now the running execution context.
8. If *kind* is base, perform OrdinaryCallBindThis(*F*, *calleeContext*, *thisArgument*).
9. Let *constructorEnv* be the LexicalEnvironment of *calleeContext*.
10. Let *envRec* be *constructorEnv*'s EnvironmentRecord.
11. Let *result* be OrdinaryCallEvaluateBody(*F*, *argumentsList*).
12. Remove *calleeContext* from the execution context stack and restore *callerContext* as the running execution context.
13. If *result*.[[Type]] is return, then
    a. If Type(*result*.[[Value]]) is Object, return NormalCompletion(*result*.[[Value]]).
    b. If *kind* is base, return NormalCompletion(*thisArgument*).
    c. If *result*.[[Value]] is not **undefined**, throw a **TypeError** exception.
14. Else, ReturnIfAbrupt(*result*).
15. Return ? *envRec*.GetThisBinding().

9.2.3 OrdinaryFunctionCreate (*functionPrototype*, *ParameterList*, *Body*, *thisMode*, *Scope*)

The abstract operation OrdinaryFunctionCreate requires the arguments: an object *functionPrototype*, a parameter list Parse Node specified by *ParameterList*, a body Parse Node specified by *Body*, *thisMode* which is either lexical-this or

non-lexical-this, and a Lexical Environment specified by *Scope*. OrdinaryFunctionCreate performs the following steps:

1. Assert: Type(*functionPrototype*) is Object.
2. Let *internalSlotsList* be the internal slots listed in Table 27.
3. Let *F* be ! OrdinaryObjectCreate(*functionPrototype*, *internalSlotsList*).
4. Set *F*.[[Call]] to the definition specified in 9.2.1.
5. Set *F*.[[FormalParameters]] to *ParameterList*.
6. Set *F*.[[ECMAScriptCode]] to *Body*.
7. If the source text matching *Body* is strict mode code, let *Strict* be **true**; else let *Strict* be **false**.
8. Set *F*.[[Strict]] to *Strict*.
9. If *thisMode* is lexical-this, set *F*.[[ThisMode]] to lexical.
10. Else if *Strict* is **true**, set *F*.[[ThisMode]] to strict.
11. Else, set *F*.[[ThisMode]] to global.
12. Set *F*.[[IsClassConstructor]] to **false**.
13. Set *F*.[[Environment]] to *Scope*.
14. Set *F*.[[ScriptOrModule]] to GetActiveScriptOrModule().
15. Set *F*.[[Realm]] to the current Realm Record.
16. Set *F*.[[HomeObject]] to **undefined**.
17. Let *len* be the ExpectedArgumentCount of *ParameterList*.
18. Perform ! SetFunctionLength(*F*, *len*).
19. Return *F*.

9.2.4 AddRestrictedFunctionProperties (*F*, *realm*)

The abstract operation AddRestrictedFunctionProperties is called with a function object *F* and Realm Record *realm* as its argument. It performs the following steps:

1. Assert: *realm*.[[Intrinsics]].[[%ThrowTypeError%]] exists and has been initialized.
2. Let *thrower* be *realm*.[[Intrinsics]].[[%ThrowTypeError%]].
3. Perform ! DefinePropertyOrThrow(*F*, **"caller"**, PropertyDescriptor { [[Get]]: *thrower*, [[Set]]: *thrower*, [[Enumerable]]: **false**, [[Configurable]]: **true** }).
4. Return ! DefinePropertyOrThrow(*F*, **"arguments"**, PropertyDescriptor { [[Get]]: *thrower*, [[Set]]: *thrower*, [[Enumerable]]: **false**, [[Configurable]]: **true** }).

9.2.4.1 %ThrowTypeError% ( )

The *%ThrowTypeError%* intrinsic is an anonymous built-in function object that is defined once for each realm. When %ThrowTypeError% is called it performs the following steps:

1. Throw a **TypeError** exception.

The value of the [[Extensible]] internal slot of a %ThrowTypeError% function is **false**.

The **"length"** property of a %ThrowTypeError% function has the attributes { [[Writable]]: **false**, [[Enumerable]]: **false**, [[Configurable]]: **false** }.

9.2.5 MakeConstructor (*F* [, *writablePrototype* [, *prototype*]])

The abstract operation MakeConstructor requires a Function argument *F* and optionally, a Boolean *writablePrototype*

and an object *prototype*. If *prototype* is provided it is assumed to already contain, if needed, a **"constructor"** property whose value is *F*. This operation converts *F* into a constructor by performing the following steps:

1. Assert: *F* is an ECMAScript function object.
2. Assert: IsConstructor(*F*) is **false**.
3. Assert: *F* is an extensible object that does not have a **"prototype"** own property.
4. Set *F*.[[Construct]] to the definition specified in 9.2.2.
5. Set *F*.[[ConstructorKind]] to base.
6. If *writablePrototype* is not present, set *writablePrototype* to **true**.
7. If *prototype* is not present, then
    a. Set *prototype* to OrdinaryObjectCreate(%Object.prototype%).
    b. Perform ! DefinePropertyOrThrow(*prototype*, **"constructor"**, PropertyDescriptor { [[Value]]: *F*, [[Writable]]: *writablePrototype*, [[Enumerable]]: **false**, [[Configurable]]: **true** }).
8. Perform ! DefinePropertyOrThrow(*F*, **"prototype"**, PropertyDescriptor { [[Value]]: *prototype*, [[Writable]]: *writablePrototype*, [[Enumerable]]: **false**, [[Configurable]]: **false** }).
9. Return NormalCompletion(**undefined**).

9.2.6 MakeClassConstructor (*F*)

The abstract operation MakeClassConstructor with argument *F* performs the following steps:

1. Assert: *F* is an ECMAScript function object.
2. Assert: *F*.[[IsClassConstructor]] is **false**.
3. Set *F*.[[IsClassConstructor]] to **true**.
4. Return NormalCompletion(**undefined**).

9.2.7 MakeMethod (*F*, *homeObject*)

The abstract operation MakeMethod with arguments *F* and *homeObject* configures *F* as a method by performing the following steps:

1. Assert: *F* is an ECMAScript function object.
2. Assert: Type(*homeObject*) is Object.
3. Set *F*.[[HomeObject]] to *homeObject*.
4. Return NormalCompletion(**undefined**).

9.2.8 SetFunctionName (*F*, *name* [, *prefix*])

The abstract operation SetFunctionName requires a Function argument *F*, a String or Symbol argument *name* and optionally a String argument *prefix*. This operation adds a **"name"** property to *F* by performing the following steps:

1. Assert: *F* is an extensible object that does not have a **"name"** own property.
2. Assert: Type(*name*) is either Symbol or String.
3. Assert: If *prefix* is present, then Type(*prefix*) is String.
4. If Type(*name*) is Symbol, then
    a. Let *description* be *name*'s [[Description]] value.
    b. If *description* is **undefined**, set *name* to the empty String.
    c. Else, set *name* to the string-concatenation of **"["**, *description*, and **"]"**.

5. If *prefix* is present, then
    a. Set *name* to the string-concatenation of *prefix*, the code unit 0x0020 (SPACE), and *name*.
6. Return ! DefinePropertyOrThrow(*F*, **"name"**, PropertyDescriptor { [[Value]]: *name*, [[Writable]]: **false**, [[Enumerable]]: **false**, [[Configurable]]: **true** }).

9.2.9 SetFunctionLength (*F*, *length*)

The abstract operation SetFunctionLength requires a Function argument *F* and a Number argument *length*. This operation adds a **"length"** property to *F* by performing the following steps:

1. Assert: *F* is an extensible object that does not have a **"length"** own property.
2. Assert: Type(*length*) is Number.
3. Assert: ! IsNonNegativeInteger(*length*) is **true**.
4. Return ! DefinePropertyOrThrow(*F*, **"length"**, PropertyDescriptor { [[Value]]: *length*, [[Writable]]: **false**, [[Enumerable]]: **false**, [[Configurable]]: **true** }).

9.2.10 FunctionDeclarationInstantiation (*func*, *argumentsList*)

NOTE 1 When an execution context is established for evaluating an ECMAScript function a new function Environment Record is created and bindings for each formal parameter are instantiated in that Environment Record. Each declaration in the function body is also instantiated. If the function's formal parameters do not include any default value initializers then the body declarations are instantiated in the same Environment Record as the parameters. If default value parameter initializers exist, a second Environment Record is created for the body declarations. Formal parameters and functions are initialized as part of FunctionDeclarationInstantiation. All other bindings are initialized during evaluation of the function body.

FunctionDeclarationInstantiation is performed as follows using arguments *func* and *argumentsList*. *func* is the function object for which the execution context is being established.

1. Let *calleeContext* be the running execution context.
2. Let *code* be *func*.[[ECMAScriptCode]].
3. Let *strict* be *func*.[[Strict]].
4. Let *formals* be *func*.[[FormalParameters]].
5. Let *parameterNames* be the BoundNames of *formals*.
6. If *parameterNames* has any duplicate entries, let *hasDuplicates* be **true**. Otherwise, let *hasDuplicates* be **false**.
7. Let *simpleParameterList* be IsSimpleParameterList of *formals*.
8. Let *hasParameterExpressions* be ContainsExpression of *formals*.
9. Let *varNames* be the VarDeclaredNames of *code*.
10. Let *varDeclarations* be the VarScopedDeclarations of *code*.
11. Let *lexicalNames* be the LexicallyDeclaredNames of *code*.
12. Let *functionNames* be a new empty List.
13. Let *functionsToInitialize* be a new empty List.
14. For each *d* in *varDeclarations*, in reverse list order, do
    a. If *d* is neither a *VariableDeclaration* nor a *ForBinding* nor a *BindingIdentifier*, then
        i. Assert: *d* is either a *FunctionDeclaration*, a *GeneratorDeclaration*, an *AsyncFunctionDeclaration*, or an *AsyncGeneratorDeclaration*.

ii. Let *fn* be the sole element of the BoundNames of *d*.
iii. If *fn* is not an element of *functionNames*, then
1. Insert *fn* as the first element of *functionNames*.
2. NOTE: If there are multiple function declarations for the same name, the last declaration is used.
3. Insert *d* as the first element of *functionsToInitialize*.

15. Let *argumentsObjectNeeded* be **true**.
16. If *func*.[[ThisMode]] is lexical, then
    a. NOTE: Arrow functions never have an arguments objects.
    b. Set *argumentsObjectNeeded* to **false**.
17. Else if **"arguments"** is an element of *parameterNames*, then
    a. Set *argumentsObjectNeeded* to **false**.
18. Else if *hasParameterExpressions* is **false**, then
    a. If **"arguments"** is an element of *functionNames* or if **"arguments"** is an element of *lexicalNames*, then
        i. Set *argumentsObjectNeeded* to **false**.
19. If *strict* is **true** or if *hasParameterExpressions* is **false**, then
    a. NOTE: Only a single lexical environment is needed for the parameters and top-level vars.
    b. Let *env* be the LexicalEnvironment of *calleeContext*.
    c. Let *envRec* be *env*'s EnvironmentRecord.
20. Else,
    a. NOTE: A separate Environment Record is needed to ensure that bindings created by direct eval calls in the formal parameter list are outside the environment where parameters are declared.
    b. Let *calleeEnv* be the LexicalEnvironment of *calleeContext*.
    c. Let *env* be NewDeclarativeEnvironment(*calleeEnv*).
    d. Let *envRec* be *env*'s EnvironmentRecord.
    e. Assert: The VariableEnvironment of *calleeContext* is *calleeEnv*.
    f. Set the LexicalEnvironment of *calleeContext* to *env*.
21. For each String *paramName* in *parameterNames*, do
    a. Let *alreadyDeclared* be *envRec*.HasBinding(*paramName*).
    b. NOTE: Early errors ensure that duplicate parameter names can only occur in non-strict functions that do not have parameter default values or rest parameters.
    c. If *alreadyDeclared* is **false**, then
        i. Perform ! *envRec*.CreateMutableBinding(*paramName*, **false**).
        ii. If *hasDuplicates* is **true**, then
            1. Perform ! *envRec*.InitializeBinding(*paramName*, **undefined**).
22. If *argumentsObjectNeeded* is **true**, then
    a. If *strict* is **true** or if *simpleParameterList* is **false**, then
        i. Let *ao* be CreateUnmappedArgumentsObject(*argumentsList*).
    b. Else,
        i. NOTE: A mapped argument object is only provided for non-strict functions that don't have a rest parameter, any parameter default value initializers, or any destructured parameters.
        ii. Let *ao* be CreateMappedArgumentsObject(*func*, *formals*, *argumentsList*, *envRec*).
    c. If *strict* is **true**, then
        i. Perform ! *envRec*.CreateImmutableBinding(**"arguments"**, **false**).
    d. Else,
        i. Perform ! *envRec*.CreateMutableBinding(**"arguments"**, **false**).
    e. Call *envRec*.InitializeBinding(**"arguments"**, *ao*).
    f. Let *parameterBindings* be a new List of *parameterNames* with **"arguments"** appended.

23. Else,
    a. Let *parameterBindings* be *parameterNames*.
24. Let *iteratorRecord* be CreateListIteratorRecord(*argumentsList*).
25. If *hasDuplicates* is **true**, then
    a. Perform ? IteratorBindingInitialization for *formals* with *iteratorRecord* and **undefined** as arguments.
26. Else,
    a. Perform ? IteratorBindingInitialization for *formals* with *iteratorRecord* and *env* as arguments.
27. If *hasParameterExpressions* is **false**, then
    a. NOTE: Only a single lexical environment is needed for the parameters and top-level vars.
    b. Let *instantiatedVarNames* be a copy of the List *parameterBindings*.
    c. For each *n* in *varNames*, do
        i. If *n* is not an element of *instantiatedVarNames*, then
            1. Append *n* to *instantiatedVarNames*.
            2. Perform ! *envRec*.CreateMutableBinding(*n*, **false**).
            3. Call *envRec*.InitializeBinding(*n*, **undefined**).
    d. Let *varEnv* be *env*.
    e. Let *varEnvRec* be *envRec*.
28. Else,
    a. NOTE: A separate Environment Record is needed to ensure that closures created by expressions in the formal parameter list do not have visibility of declarations in the function body.
    b. Let *varEnv* be NewDeclarativeEnvironment(*env*).
    c. Let *varEnvRec* be *varEnv*'s EnvironmentRecord.
    d. Set the VariableEnvironment of *calleeContext* to *varEnv*.
    e. Let *instantiatedVarNames* be a new empty List.
    f. For each *n* in *varNames*, do
        i. If *n* is not an element of *instantiatedVarNames*, then
            1. Append *n* to *instantiatedVarNames*.
            2. Perform ! *varEnvRec*.CreateMutableBinding(*n*, **false**).
            3. If *n* is not an element of *parameterBindings* or if *n* is an element of *functionNames*, let *initialValue* be **undefined**.
            4. Else,
                a. Let *initialValue* be ! *envRec*.GetBindingValue(*n*, **false**).
            5. Call *varEnvRec*.InitializeBinding(*n*, *initialValue*).
            6. NOTE: A var with the same name as a formal parameter initially has the same value as the corresponding initialized parameter.
29. NOTE: Annex B.3.3.1 adds additional steps at this point.
30. If *strict* is **false**, then
    a. Let *lexEnv* be NewDeclarativeEnvironment(*varEnv*).
    b. NOTE: Non-strict functions use a separate lexical Environment Record for top-level lexical declarations so that a direct eval can determine whether any var scoped declarations introduced by the eval code conflict with pre-existing top-level lexically scoped declarations. This is not needed for strict functions because a strict direct eval always places all declarations into a new Environment Record.
31. Else, let *lexEnv* be *varEnv*.
32. Let *lexEnvRec* be *lexEnv*'s EnvironmentRecord.
33. Set the LexicalEnvironment of *calleeContext* to *lexEnv*.
34. Let *lexDeclarations* be the LexicallyScopedDeclarations of *code*.
35. For each element *d* in *lexDeclarations*, do
    a. NOTE: A lexically declared name cannot be the same as a function/generator declaration, formal

parameter, or a var name. Lexically declared names are only instantiated here but not initialized.

b. For each element *dn* of the BoundNames of *d*, do

i. If IsConstantDeclaration of *d* is **true**, then

1. Perform ! *lexEnvRec*.CreateImmutableBinding(*dn*, **true**).

ii. Else,

1. Perform ! *lexEnvRec*.CreateMutableBinding(*dn*, **false**).

36. For each Parse Node *f* in *functionsToInitialize*, do

a. Let *fn* be the sole element of the BoundNames of *f*.

b. Let *fo* be InstantiateFunctionObject of *f* with argument *lexEnv*.

c. Perform ! *varEnvRec*.SetMutableBinding(*fn*, *fo*, **false**).

37. Return NormalCompletion(empty).

NOTE 2 B.3.3 provides an extension to the above algorithm that is necessary for backwards compatibility with web browser implementations of ECMAScript that predate ECMAScript 2015.

NOTE 3 Parameter *Initializer*s may contain direct eval expressions. Any top level declarations of such evals are only visible to the eval code (10.2). The creation of the environment for such declarations is described in 14.1.22.

9.3 Built-in Function Objects

The built-in function objects defined in this specification may be implemented as either ECMAScript function objects (9.2) whose behaviour is provided using ECMAScript code or as implementation provided function exotic objects whose behaviour is provided in some other manner. In either case, the effect of calling such functions must conform to their specifications. An implementation may also provide additional built-in function objects that are not defined in this specification.

If a built-in function object is implemented as an exotic object it must have the ordinary object behaviour specified in 9.1. All such function exotic objects also have [[Prototype]], [[Extensible]], [[Realm]], and [[ScriptOrModule]] internal slots.

Unless otherwise specified every built-in function object has the %Function.prototype% object as the initial value of its [[Prototype]] internal slot.

The behaviour specified for each built-in function via algorithm steps or other means is the specification of the function body behaviour for both [[Call]] and [[Construct]] invocations of the function. However, [[Construct]] invocation is not supported by all built-in functions. For each built-in function, when invoked with [[Call]], the [[Call]] *thisArgument* provides the **this** value, the [[Call]] *argumentsList* provides the named parameters, and the NewTarget value is **undefined**. When invoked with [[Construct]], the **this** value is uninitialized, the [[Construct]] *argumentsList* provides the named parameters, and the [[Construct]] *newTarget* parameter provides the NewTarget value. If the built-in function is implemented as an ECMAScript function object then this specified behaviour must be implemented by the ECMAScript code that is the body of the function. Built-in functions that are ECMAScript function objects must be strict functions. If a built-in constructor has any [[Call]] behaviour other than throwing a **TypeError** exception, an ECMAScript implementation of the function must be done in a manner that does not cause the function's [[IsClassConstructor]] internal slot to have the value **true**.

Built-in function objects that are not identified as constructors do not implement the [[Construct]] internal method

unless otherwise specified in the description of a particular function. When a built-in constructor is called as part of a **new** expression the *argumentsList* parameter of the invoked [[Construct]] internal method provides the values for the built-in constructor's named parameters.

Built-in functions that are not constructors do not have a **"prototype"** property unless otherwise specified in the description of a particular function.

If a built-in function object is not implemented as an ECMAScript function it must provide [[Call]] and [[Construct]] internal methods that conform to the following definitions:

9.3.1 [[Call]] (*thisArgument*, *argumentsList*)

The [[Call]] internal method for a built-in function object *F* is called with parameters *thisArgument* and *argumentsList*, a List of ECMAScript language values. The following steps are taken:

1. Let *callerContext* be the running execution context.
2. If *callerContext* is not already suspended, suspend *callerContext*.
3. Let *calleeContext* be a new execution context.
4. Set the Function of *calleeContext* to *F*.
5. Let *calleeRealm* be *F*.[[Realm]].
6. Set the Realm of *calleeContext* to *calleeRealm*.
7. Set the ScriptOrModule of *calleeContext* to *F*.[[ScriptOrModule]].
8. Perform any necessary implementation-defined initialization of *calleeContext*.
9. Push *calleeContext* onto the execution context stack; *calleeContext* is now the running execution context.
10. Let *result* be the Completion Record that is the result of evaluating *F* in a manner that conforms to the specification of *F*. *thisArgument* is the **this** value, *argumentsList* provides the named parameters, and the NewTarget value is **undefined**.
11. Remove *calleeContext* from the execution context stack and restore *callerContext* as the running execution context.
12. Return *result*.

NOTE When *calleeContext* is removed from the execution context stack it must not be destroyed if it has been suspended and retained by an accessible generator object for later resumption.

9.3.2 [[Construct]] (*argumentsList*, *newTarget*)

The [[Construct]] internal method for built-in function object *F* is called with parameters *argumentsList* and *newTarget*. The steps performed are the same as [[Call]] (see 9.3.1) except that step 10 is replaced by:

10. Let *result* be the Completion Record that is the result of evaluating *F* in a manner that conforms to the specification of *F*. The **this** value is uninitialized, *argumentsList* provides the named parameters, and *newTarget* provides the NewTarget value.

9.3.3 CreateBuiltinFunction (*steps*, *internalSlotsList* [, *realm* [, *prototype*]])

The abstract operation CreateBuiltinFunction takes arguments *steps*, *internalSlotsList*, *realm*, and *prototype*. The argument *internalSlotsList* is a List of the names of additional internal slots that must be defined as part of the object. CreateBuiltinFunction returns a built-in function object created by the following steps:

1. Assert: *steps* is either a set of algorithm steps or other definition of a function's behaviour provided in this specification.
2. If *realm* is not present, set *realm* to the current Realm Record.
3. Assert: *realm* is a Realm Record.
4. If *prototype* is not present, set *prototype* to *realm*.[[Intrinsics]].[[%Function.prototype%]].
5. Let *func* be a new built-in function object that when called performs the action described by *steps*. The new function object has internal slots whose names are the elements of *internalSlotsList*.
6. Set *func*.[[Realm]] to *realm*.
7. Set *func*.[[Prototype]] to *prototype*.
8. Set *func*.[[Extensible]] to **true**.
9. Set *func*.[[ScriptOrModule]] to **null**.
10. Return *func*.

Each built-in function defined in this specification is created by calling the CreateBuiltinFunction abstract operation.

9.4 Built-in Exotic Object Internal Methods and Slots

This specification defines several kinds of built-in exotic objects. These objects generally behave similar to ordinary objects except for a few specific situations. The following exotic objects use the ordinary object internal methods except where it is explicitly specified otherwise below:

9.4.1 Bound Function Exotic Objects

A bound function exotic object is an exotic object that wraps another function object. A bound function exotic object is callable (it has a [[Call]] internal method and may have a [[Construct]] internal method). Calling a bound function exotic object generally results in a call of its wrapped function.

An object is a *bound function exotic object* if its [[Call]] and (if applicable) [[Construct]] internal methods use the following implementations, and its other essential internal methods use the definitions found in 9.1. These methods are installed in BoundFunctionCreate.

Bound function exotic objects do not have the internal slots of ECMAScript function objects listed in Table 27. Instead they have the internal slots listed in Table 28, in addition to [[Prototype]] and [[Extensible]].

Table 28: Internal Slots of Bound Function Exotic Objects

Internal Slot	Type	Description
[[BoundTargetFunction]]	Callable Object	The wrapped function object.
[[BoundThis]]	Any	The value that is always passed as the **this** value when calling the wrapped function.
[[BoundArguments]]	List of Any	A list of values whose elements are used as the first arguments to any call to the wrapped function.

9.4.1.1 [[Call]] (*thisArgument*, *argumentsList*)

When the [[Call]] internal method of a bound function exotic object, *F*, which was created using the bind function is called with parameters *thisArgument* and *argumentsList*, a List of ECMAScript language values, the following steps are taken:

1. Let *target* be *F*.[[BoundTargetFunction]].
2. Let *boundThis* be *F*.[[BoundThis]].
3. Let *boundArgs* be *F*.[[BoundArguments]].
4. Let *args* be a new list containing the same values as the list *boundArgs* in the same order followed by the same values as the list *argumentsList* in the same order.
5. Return ? Call(*target*, *boundThis*, *args*).

9.4.1.2 [[Construct]] (*argumentsList*, *newTarget*)

When the [[Construct]] internal method of a bound function exotic object, *F* that was created using the bind function is called with a list of arguments *argumentsList* and *newTarget*, the following steps are taken:

1. Let *target* be *F*.[[BoundTargetFunction]].
2. Assert: IsConstructor(*target*) is **true**.
3. Let *boundArgs* be *F*.[[BoundArguments]].
4. Let *args* be a new list containing the same values as the list *boundArgs* in the same order followed by the same values as the list *argumentsList* in the same order.
5. If SameValue(*F*, *newTarget*) is **true**, set *newTarget* to *target*.
6. Return ? Construct(*target*, *args*, *newTarget*).

9.4.1.3 BoundFunctionCreate (*targetFunction*, *boundThis*, *boundArgs*)

The abstract operation BoundFunctionCreate with arguments *targetFunction*, *boundThis*, and *boundArgs* is used to specify the creation of new bound function exotic objects. It performs the following steps:

1. Assert: Type(*targetFunction*) is Object.
2. Let *proto* be ? *targetFunction*.[[GetPrototypeOf]]().
3. Let *internalSlotsList* be the internal slots listed in Table 28, plus [[Prototype]] and [[Extensible]].
4. Let *obj* be ! MakeBasicObject(*internalSlotsList*).
5. Set *obj*.[[Prototype]] to *proto*.
6. Set *obj*.[[Call]] as described in 9.4.1.1.
7. If IsConstructor(*targetFunction*) is **true**, then
    a. Set *obj*.[[Construct]] as described in 9.4.1.2.
8. Set *obj*.[[BoundTargetFunction]] to *targetFunction*.
9. Set *obj*.[[BoundThis]] to *boundThis*.
10. Set *obj*.[[BoundArguments]] to *boundArgs*.
11. Return *obj*.

9.4.2 Array Exotic Objects

An Array object is an exotic object that gives special treatment to array index property keys (see 6.1.7). A property whose property name is an array index is also called an *element*. Every Array object has a non-configurable **"length"** property whose value is always a nonnegative integer less than 2^{32}. The value of the **"length"** property is numerically greater than the name of every own property whose name is an array index; whenever an own property of an Array object is created or changed, other properties are adjusted as necessary to maintain this invariant. Specifically,

whenever an own property is added whose name is an array index, the value of the **"length"** property is changed, if necessary, to be one more than the numeric value of that array index; and whenever the value of the **"length"** property is changed, every own property whose name is an array index whose value is not smaller than the new length is deleted. This constraint applies only to own properties of an Array object and is unaffected by **"length"** or array index properties that may be inherited from its prototypes.

> NOTE A String property name *P* is an *array index* if and only if ToString(ToUint32(*P*)) is equal to *P* and ToUint32(*P*) is not equal to 2^{32} - 1.

An object is an *Array exotic object* (or simply, an Array object) if its [[DefineOwnProperty]] internal method uses the following implementation, and its other essential internal methods use the definitions found in 9.1. These methods are installed in ArrayCreate.

9.4.2.1 [[DefineOwnProperty]] (*P*, *Desc*)

When the [[DefineOwnProperty]] internal method of an Array exotic object *A* is called with property key *P*, and Property Descriptor *Desc*, the following steps are taken:

1. Assert: IsPropertyKey(*P*) is **true**.
2. If *P* is **"length"**, then
   a. Return ? ArraySetLength(*A*, *Desc*).
3. Else if *P* is an array index, then
   a. Let *oldLenDesc* be OrdinaryGetOwnProperty(*A*, **"length"**).
   b. Assert: *oldLenDesc* will never be **undefined** or an accessor descriptor because Array objects are created with a length data property that cannot be deleted or reconfigured.
   c. Let *oldLen* be *oldLenDesc*.[[Value]].
   d. Assert: IsNonNegativeInteger(*oldLen*) is **true**.
   e. Let *index* be ! ToUint32(*P*).
   f. If *index* ≥ *oldLen* and *oldLenDesc*.[[Writable]] is **false**, return **false**.
   g. Let *succeeded* be ! OrdinaryDefineOwnProperty(*A*, *P*, *Desc*).
   h. If *succeeded* is **false**, return **false**.
   i. If *index* ≥ *oldLen*, then
      i. Set *oldLenDesc*.[[Value]] to *index* + 1.
      ii. Let *succeeded* be OrdinaryDefineOwnProperty(*A*, **"length"**, *oldLenDesc*).
      iii. Assert: *succeeded* is **true**.
   j. Return **true**.
4. Return OrdinaryDefineOwnProperty(*A*, *P*, *Desc*).

9.4.2.2 ArrayCreate (*length* [, *proto*])

The abstract operation ArrayCreate with argument *length* (either 0 or a positive integer) and optional argument *proto* is used to specify the creation of new Array exotic objects. It performs the following steps:

1. Assert: ! IsNonNegativeInteger(*length*) is **true**.
2. If *length* is **-0**, set *length* to **+0**.
3. If *length* > 2^{32} - 1, throw a **RangeError** exception.
4. If *proto* is not present, set *proto* to %Array.prototype%.
5. Let *A* be ! MakeBasicObject(« [[Prototype]], [[Extensible]] »).

6. Set *A*.[[Prototype]] to *proto*.
7. Set *A*.[[DefineOwnProperty]] as specified in 9.4.2.1.
8. Perform ! OrdinaryDefineOwnProperty(*A*, **"length"**, PropertyDescriptor { [[Value]]: *length*, [[Writable]]: **true**, [[Enumerable]]: **false**, [[Configurable]]: **false** }).
9. Return *A*.

9.4.2.3 ArraySpeciesCreate (*originalArray*, *length*)

The abstract operation ArraySpeciesCreate with arguments *originalArray* and *length* is used to specify the creation of a new Array object using a constructor function that is derived from *originalArray*. It performs the following steps:

1. Assert: ! IsNonNegativeInteger(*length*) is **true**.
2. If *length* is **-0**, set *length* to **+0**.
3. Let *isArray* be ? IsArray(*originalArray*).
4. If *isArray* is **false**, return ? ArrayCreate(*length*).
5. Let *C* be ? Get(*originalArray*, **"constructor"**).
6. If IsConstructor(*C*) is **true**, then
   a. Let *thisRealm* be the current Realm Record.
   b. Let *realmC* be ? GetFunctionRealm(*C*).
   c. If *thisRealm* and *realmC* are not the same Realm Record, then
      i. If SameValue(*C*, *realmC*.[[Intrinsics]].[[%Array%]]) is **true**, set *C* to **undefined**.
7. If Type(*C*) is Object, then
   a. Set *C* to ? Get(*C*, @@species).
   b. If *C* is **null**, set *C* to **undefined**.
8. If *C* is **undefined**, return ? ArrayCreate(*length*).
9. If IsConstructor(*C*) is **false**, throw a **TypeError** exception.
10. Return ? Construct(*C*, « *length* »).

NOTE If *originalArray* was created using the standard built-in Array constructor for a realm that is not the realm of the running execution context, then a new Array is created using the realm of the running execution context. This maintains compatibility with Web browsers that have historically had that behaviour for the **`Array.prototype`** methods that now are defined using ArraySpeciesCreate.

9.4.2.4 ArraySetLength (*A*, *Desc*)

When the abstract operation ArraySetLength is called with an Array exotic object *A*, and Property Descriptor *Desc*, the following steps are taken:

1. If *Desc*.[[Value]] is absent, then
   a. Return OrdinaryDefineOwnProperty(*A*, **"length"**, *Desc*).
2. Let *newLenDesc* be a copy of *Desc*.
3. Let *newLen* be ? ToUint32(*Desc*.[[Value]]).
4. Let *numberLen* be ? ToNumber(*Desc*.[[Value]]).
5. If *newLen* ≠ *numberLen*, throw a **RangeError** exception.
6. Set *newLenDesc*.[[Value]] to *newLen*.
7. Let *oldLenDesc* be OrdinaryGetOwnProperty(*A*, **"length"**).
8. Assert: *oldLenDesc* will never be **undefined** or an accessor descriptor because Array objects are created with a

length data property that cannot be deleted or reconfigured.

9. Let *oldLen* be *oldLenDesc*.[[Value]].
10. If *newLen* ≥ *oldLen*, then
    a. Return OrdinaryDefineOwnProperty(*A*, **"length"**, *newLenDesc*).
11. If *oldLenDesc*.[[Writable]] is **false**, return **false**.
12. If *newLenDesc*.[[Writable]] is absent or has the value **true**, let *newWritable* be **true**.
13. Else,
    a. Need to defer setting the [[Writable]] attribute to **false** in case any elements cannot be deleted.
    b. Let *newWritable* be **false**.
    c. Set *newLenDesc*.[[Writable]] to **true**.
14. Let *succeeded* be ! OrdinaryDefineOwnProperty(*A*, **"length"**, *newLenDesc*).
15. If *succeeded* is **false**, return **false**.
16. For each own property key *P* of *A* that is an array index, whose numeric value is greater than or equal to *newLen*, in descending numeric index order, do
    a. Let *deleteSucceeded* be ! *A*.[[Delete]](*P*).
    b. If *deleteSucceeded* is **false**, then
        i. Set *newLenDesc*.[[Value]] to ! ToUint32(*P*) + 1.
        ii. If *newWritable* is **false**, set *newLenDesc*.[[Writable]] to **false**.
        iii. Perform ! OrdinaryDefineOwnProperty(*A*, **"length"**, *newLenDesc*).
        iv. Return **false**.
17. If *newWritable* is **false**, then
    a. Return OrdinaryDefineOwnProperty(*A*, **"length"**, PropertyDescriptor { [[Writable]]: **false** }). This call will always return **true**.
18. Return **true**.

NOTE In steps 3 and 4, if *Desc*.[[Value]] is an object then its `valueOf` method is called twice. This is legacy behaviour that was specified with this effect starting with the 2nd Edition of this specification.

9.4.3 String Exotic Objects

A String object is an exotic object that encapsulates a String value and exposes virtual integer-indexed data properties corresponding to the individual code unit elements of the String value. String exotic objects always have a data property named **"length"** whose value is the number of code unit elements in the encapsulated String value. Both the code unit data properties and the **"length"** property are non-writable and non-configurable.

An object is a *String exotic object* (or simply, a String object) if its [[GetOwnProperty]], [[DefineOwnProperty]], and [[OwnPropertyKeys]] internal methods use the following implementations, and its other essential internal methods use the definitions found in 9.1. These methods are installed in StringCreate.

String exotic objects have the same internal slots as ordinary objects. They also have a [[StringData]] internal slot.

9.4.3.1 [[GetOwnProperty]] (*P*)

When the [[GetOwnProperty]] internal method of a String exotic object *S* is called with property key *P*, the following steps are taken:

1. Assert: IsPropertyKey(*P*) is **true**.

2. Let *desc* be OrdinaryGetOwnProperty(*S*, *P*).
3. If *desc* is not **undefined**, return *desc*.
4. Return ! StringGetOwnProperty(*S*, *P*).

9.4.3.2 [[DefineOwnProperty]] (*P*, *Desc*)

When the [[DefineOwnProperty]] internal method of a String exotic object *S* is called with property key *P*, and Property Descriptor *Desc*, the following steps are taken:

1. Assert: IsPropertyKey(*P*) is **true**.
2. Let *stringDesc* be ! StringGetOwnProperty(*S*, *P*).
3. If *stringDesc* is not **undefined**, then
    a. Let *extensible* be *S*.[[Extensible]].
    b. Return ! IsCompatiblePropertyDescriptor(*extensible*, *Desc*, *stringDesc*).
4. Return ! OrdinaryDefineOwnProperty(*S*, *P*, *Desc*).

9.4.3.3 [[OwnPropertyKeys]] ( )

When the [[OwnPropertyKeys]] internal method of a String exotic object *O* is called, the following steps are taken:

1. Let *keys* be a new empty List.
2. Let *str* be *O*.[[StringData]].
3. Assert: Type(*str*) is String.
4. Let *len* be the length of *str*.
5. For each integer *i* starting with 0 such that $i < len$, in ascending order, do
    a. Add ! ToString(*i*) as the last element of *keys*.
6. For each own property key *P* of *O* such that *P* is an array index and ToInteger(*P*) $\geq len$, in ascending numeric index order, do
    a. Add *P* as the last element of *keys*.
7. For each own property key *P* of *O* such that Type(*P*) is String and *P* is not an array index, in ascending chronological order of property creation, do
    a. Add *P* as the last element of *keys*.
8. For each own property key *P* of *O* such that Type(*P*) is Symbol, in ascending chronological order of property creation, do
    a. Add *P* as the last element of *keys*.
9. Return *keys*.

9.4.3.4 StringCreate (*value*, *prototype*)

The abstract operation StringCreate with arguments *value* and *prototype* is used to specify the creation of new String exotic objects. It performs the following steps:

1. Assert: Type(*value*) is String.
2. Let *S* be ! MakeBasicObject(« [[Prototype]], [[Extensible]], [[StringData]] »).
3. Set *S*.[[Prototype]] to *prototype*.
4. Set *S*.[[StringData]] to *value*.
5. Set *S*.[[GetOwnProperty]] as specified in 9.4.3.1.
6. Set *S*.[[DefineOwnProperty]] as specified in 9.4.3.2.
7. Set *S*.[[OwnPropertyKeys]] as specified in 9.4.3.3.

8. Let *length* be the number of code unit elements in *value*.
9. Perform ! DefinePropertyOrThrow(*S*, **"length"**, PropertyDescriptor { [[Value]]: *length*, [[Writable]]: **false**, [[Enumerable]]: **false**, [[Configurable]]: **false** }).
10. Return *S*.

9.4.3.5 StringGetOwnProperty (*S*, *P*)

The abstract operation StringGetOwnProperty called with arguments *S* and *P* performs the following steps:

1. Assert: *S* is an Object that has a [[StringData]] internal slot.
2. Assert: IsPropertyKey(*P*) is **true**.
3. If Type(*P*) is not String, return **undefined**.
4. Let *index* be ! CanonicalNumericIndexString(*P*).
5. If *index* is **undefined**, return **undefined**.
6. If IsInteger(*index*) is **false**, return **undefined**.
7. If *index* = **-0**, return **undefined**.
8. Let *str* be *S*.[[StringData]].
9. Assert: Type(*str*) is String.
10. Let *len* be the length of *str*.
11. If *index* < 0 or *len* ≤ *index*, return **undefined**.
12. Let *resultStr* be the String value of length 1, containing one code unit from *str*, specifically the code unit at index *index*.
13. Return the PropertyDescriptor { [[Value]]: *resultStr*, [[Writable]]: **false**, [[Enumerable]]: **true**, [[Configurable]]: **false** }.

9.4.4 Arguments Exotic Objects

Most ECMAScript functions make an arguments object available to their code. Depending upon the characteristics of the function definition, its arguments object is either an ordinary object or an arguments exotic object. An arguments exotic object is an exotic object whose array index properties map to the formal parameters bindings of an invocation of its associated ECMAScript function.

An object is an *arguments exotic object* if its internal methods use the following implementations, with the ones not specified here using those found in 9.1. These methods are installed in CreateMappedArgumentsObject.

> NOTE 1 While CreateUnmappedArgumentsObject is grouped into this clause, it creates an ordinary object, not an arguments exotic object.

Arguments exotic objects have the same internal slots as ordinary objects. They also have a [[ParameterMap]] internal slot. Ordinary arguments objects also have a [[ParameterMap]] internal slot whose value is always undefined. For ordinary argument objects the [[ParameterMap]] internal slot is only used by **`Object.prototype.toString`** (19.1.3.6) to identify them as such.

NOTE 2 The integer-indexed data properties of an arguments exotic object whose numeric name values are less than the number of formal parameters of the corresponding function object initially share their values with the corresponding argument bindings in the function's execution context. This means that changing the property changes the corresponding value of the argument binding and vice-versa. This correspondence is broken if such a property is deleted and then redefined or if the property is changed into an accessor property. If the arguments object is an ordinary object, the values of its properties are simply a copy of the arguments passed to the function and there is no dynamic linkage between the property values and the formal parameter values.

NOTE 3 The ParameterMap object and its property values are used as a device for specifying the arguments object correspondence to argument bindings. The ParameterMap object and the objects that are the values of its properties are not directly observable from ECMAScript code. An ECMAScript implementation does not need to actually create or use such objects to implement the specified semantics.

NOTE 4 Ordinary arguments objects define a non-configurable accessor property named **"callee"** which throws a **TypeError** exception on access. The **"callee"** property has a more specific meaning for arguments exotic objects, which are created only for some class of non-strict functions. The definition of this property in the ordinary variant exists to ensure that it is not defined in any other manner by conforming ECMAScript implementations.

NOTE 5 ECMAScript implementations of arguments exotic objects have historically contained an accessor property named **"caller"**. Prior to ECMAScript 2017, this specification included the definition of a throwing **"caller"** property on ordinary arguments objects. Since implementations do not contain this extension any longer, ECMAScript 2017 dropped the requirement for a throwing **"caller"** accessor.

9.4.4.1 [[GetOwnProperty]] (*P*)

The [[GetOwnProperty]] internal method of an arguments exotic object when called with a property key *P* performs the following steps:

1. Let *args* be the arguments object.
2. Let *desc* be OrdinaryGetOwnProperty(*args*, *P*).
3. If *desc* is **undefined**, return *desc*.
4. Let *map* be *args*.[[ParameterMap]].
5. Let *isMapped* be ! HasOwnProperty(*map*, *P*).
6. If *isMapped* is **true**, then
    a. Set *desc*.[[Value]] to Get(*map*, *P*).
7. Return *desc*.

9.4.4.2 [[DefineOwnProperty]] (*P*, *Desc*)

The [[DefineOwnProperty]] internal method of an arguments exotic object when called with a property key *P* and Property Descriptor *Desc* performs the following steps:

1. Let *args* be the arguments object.
2. Let *map* be *args*.[[ParameterMap]].
3. Let *isMapped* be HasOwnProperty(*map*, *P*).
4. Let *newArgDesc* be *Desc*.
5. If *isMapped* is **true** and IsDataDescriptor(*Desc*) is **true**, then
    a. If *Desc*.[[Value]] is not present and *Desc*.[[Writable]] is present and its value is **false**, then
        i. Set *newArgDesc* to a copy of *Desc*.
        ii. Set *newArgDesc*.[[Value]] to Get(*map*, *P*).
6. Let *allowed* be ? OrdinaryDefineOwnProperty(*args*, *P*, *newArgDesc*).
7. If *allowed* is **false**, return **false**.
8. If *isMapped* is **true**, then
    a. If IsAccessorDescriptor(*Desc*) is **true**, then
        i. Call *map*.[[Delete]](*P*).
    b. Else,
        i. If *Desc*.[[Value]] is present, then
            1. Let *setStatus* be Set(*map*, *P*, *Desc*.[[Value]], **false**).
            2. Assert: *setStatus* is **true** because formal parameters mapped by argument objects are always writable.
        ii. If *Desc*.[[Writable]] is present and its value is **false**, then
            1. Call *map*.[[Delete]](*P*).
9. Return **true**.

9.4.4.3 [[Get]] (*P*, *Receiver*)

The [[Get]] internal method of an arguments exotic object when called with a property key *P* and ECMAScript language value *Receiver* performs the following steps:

1. Let *args* be the arguments object.
2. Let *map* be *args*.[[ParameterMap]].
3. Let *isMapped* be ! HasOwnProperty(*map*, *P*).
4. If *isMapped* is **false**, then
    a. Return ? OrdinaryGet(*args*, *P*, *Receiver*).
5. Else,
    a. Assert: *map* contains a formal parameter mapping for *P*.
    b. Return Get(*map*, *P*).

9.4.4.4 [[Set]] (*P*, *V*, *Receiver*)

The [[Set]] internal method of an arguments exotic object when called with property key *P*, value *V*, and ECMAScript language value *Receiver* performs the following steps:

1. Let *args* be the arguments object.
2. If SameValue(*args*, *Receiver*) is **false**, then
    a. Let *isMapped* be **false**.
3. Else,
    a. Let *map* be *args*.[[ParameterMap]].
    b. Let *isMapped* be ! HasOwnProperty(*map*, *P*).
4. If *isMapped* is **true**, then
    a. Let *setStatus* be Set(*map*, *P*, *V*, **false**).

b. Assert: *setStatus* is **true** because formal parameters mapped by argument objects are always writable.

5. Return ? OrdinarySet(*args*, *P*, *V*, *Receiver*).

9.4.4.5 [[Delete]] (*P*)

The [[Delete]] internal method of an arguments exotic object when called with a property key *P* performs the following steps:

1. Let *args* be the arguments object.
2. Let *map* be *args*.[[ParameterMap]].
3. Let *isMapped* be ! HasOwnProperty(*map*, *P*).
4. Let *result* be ? OrdinaryDelete(*args*, *P*).
5. If *result* is **true** and *isMapped* is **true**, then
   a. Call *map*.[[Delete]](*P*).
6. Return *result*.

9.4.4.6 CreateUnmappedArgumentsObject (*argumentsList*)

The abstract operation CreateUnmappedArgumentsObject called with an argument *argumentsList* performs the following steps:

1. Let *len* be the number of elements in *argumentsList*.
2. Let *obj* be OrdinaryObjectCreate(%Object.prototype%, « [[ParameterMap]] »).
3. Set *obj*.[[ParameterMap]] to **undefined**.
4. Perform DefinePropertyOrThrow(*obj*, **"length"**, PropertyDescriptor { [[Value]]: *len*, [[Writable]]: **true**, [[Enumerable]]: **false**, [[Configurable]]: **true** }).
5. Let *index* be 0.
6. Repeat, while *index* < *len*,
   a. Let *val* be *argumentsList*[*index*].
   b. Perform ! CreateDataPropertyOrThrow(*obj*, ! ToString(*index*), *val*).
   c. Set *index* to *index* + 1.
7. Perform ! DefinePropertyOrThrow(*obj*, @@iterator, PropertyDescriptor { [[Value]]: %Array.prototype.values%, [[Writable]]: **true**, [[Enumerable]]: **false**, [[Configurable]]: **true** }).
8. Perform ! DefinePropertyOrThrow(*obj*, **"callee"**, PropertyDescriptor { [[Get]]: %ThrowTypeError%, [[Set]]: %ThrowTypeError%, [[Enumerable]]: **false**, [[Configurable]]: **false** }).
9. Return *obj*.

9.4.4.7 CreateMappedArgumentsObject (*func*, *formals*, *argumentsList*, *env*)

The abstract operation CreateMappedArgumentsObject is called with object *func*, Parse Node *formals*, List *argumentsList*, and Environment Record *env*. The following steps are performed:

1. Assert: *formals* does not contain a rest parameter, any binding patterns, or any initializers. It may contain duplicate identifiers.
2. Let *len* be the number of elements in *argumentsList*.
3. Let *obj* be ! MakeBasicObject(« [[Prototype]], [[Extensible]], [[ParameterMap]] »).
4. Set *obj*.[[GetOwnProperty]] as specified in 9.4.4.1.
5. Set *obj*.[[DefineOwnProperty]] as specified in 9.4.4.2.
6. Set *obj*.[[Get]] as specified in 9.4.4.3.

7. Set *obj*.[[Set]] as specified in 9.4.4.4.
8. Set *obj*.[[Delete]] as specified in 9.4.4.5.
9. Set *obj*.[[Prototype]] to %Object.prototype%.
10. Let *map* be OrdinaryObjectCreate(**null**).
11. Set *obj*.[[ParameterMap]] to *map*.
12. Let *parameterNames* be the BoundNames of *formals*.
13. Let *numberOfParameters* be the number of elements in *parameterNames*.
14. Let *index* be 0.
15. Repeat, while *index* < *len*,
    a. Let *val* be *argumentsList*[*index*].
    b. Perform ! CreateDataPropertyOrThrow(*obj*, ! ToString(*index*), *val*).
    c. Set *index* to *index* + 1.
16. Perform ! DefinePropertyOrThrow(*obj*, **"length"**, PropertyDescriptor { [[Value]]: *len*, [[Writable]]: **true**, [[Enumerable]]: **false**, [[Configurable]]: **true** }).
17. Let *mappedNames* be a new empty List.
18. Let *index* be *numberOfParameters* - 1.
19. Repeat, while *index* ≥ 0,
    a. Let *name* be *parameterNames*[*index*].
    b. If *name* is not an element of *mappedNames*, then
        i. Add *name* as an element of the list *mappedNames*.
        ii. If *index* < *len*, then
            1. Let *g* be MakeArgGetter(*name*, *env*).
            2. Let *p* be MakeArgSetter(*name*, *env*).
            3. Perform *map*.[[DefineOwnProperty]](! ToString(*index*), PropertyDescriptor { [[Set]]: *p*, [[Get]]: *g*, [[Enumerable]]: **false**, [[Configurable]]: **true** }).
    c. Set *index* to *index* - 1.
20. Perform ! DefinePropertyOrThrow(*obj*, @@iterator, PropertyDescriptor { [[Value]]: %Array.prototype.values%, [[Writable]]: **true**, [[Enumerable]]: **false**, [[Configurable]]: **true** }).
21. Perform ! DefinePropertyOrThrow(*obj*, **"callee"**, PropertyDescriptor { [[Value]]: *func*, [[Writable]]: **true**, [[Enumerable]]: **false**, [[Configurable]]: **true** }).
22. Return *obj*.

9.4.4.7.1 MakeArgGetter (*name*, *env*)

The abstract operation MakeArgGetter called with String *name* and Environment Record *env* creates a built-in function object that when executed returns the value bound for *name* in *env*. It performs the following steps:

1. Let *steps* be the steps of an ArgGetter function as specified below.
2. Let *getter* be ! CreateBuiltinFunction(*steps*, « [[Name]], [[Env]] »).
3. Set *getter*.[[Name]] to *name*.
4. Set *getter*.[[Env]] to *env*.
5. Return *getter*.

An ArgGetter function is an anonymous built-in function with [[Name]] and [[Env]] internal slots. When an ArgGetter function that expects no arguments is called it performs the following steps:

1. Let *f* be the active function object.
2. Let *name* be *f*.[[Name]].
3. Let *env* be *f*.[[Env]].

4. Return *env*.GetBindingValue(*name*, **false**).

NOTE ArgGetter functions are never directly accessible to ECMAScript code.

9.4.4.7.2 MakeArgSetter (*name*, *env*)

The abstract operation MakeArgSetter called with String *name* and Environment Record *env* creates a built-in function object that when executed sets the value bound for *name* in *env*. It performs the following steps:

1. Let *steps* be the steps of an ArgSetter function as specified below.
2. Let *setter* be ! CreateBuiltinFunction(*steps*, « [[Name]], [[Env]] »).
3. Set *setter*.[[Name]] to *name*.
4. Set *setter*.[[Env]] to *env*.
5. Return *setter*.

An ArgSetter function is an anonymous built-in function with [[Name]] and [[Env]] internal slots. When an ArgSetter function is called with argument *value* it performs the following steps:

1. Let *f* be the active function object.
2. Let *name* be *f*.[[Name]].
3. Let *env* be *f*.[[Env]].
4. Return *env*.SetMutableBinding(*name*, *value*, **false**).

NOTE ArgSetter functions are never directly accessible to ECMAScript code.

9.4.5 Integer-Indexed Exotic Objects

An Integer-Indexed exotic object is an exotic object that performs special handling of integer index property keys.

Integer-Indexed exotic objects have the same internal slots as ordinary objects and additionally [[ViewedArrayBuffer]], [[ArrayLength]], [[ByteOffset]], [[ContentType]], and [[TypedArrayName]] internal slots.

An object is an *Integer-Indexed exotic object* if its [[GetOwnProperty]], [[HasProperty]], [[DefineOwnProperty]], [[Get]], [[Set]], and [[OwnPropertyKeys]] internal methods use the definitions in this section, and its other essential internal methods use the definitions found in 9.1. These methods are installed by IntegerIndexedObjectCreate.

9.4.5.1 [[GetOwnProperty]] (*P*)

When the [[GetOwnProperty]] internal method of an Integer-Indexed exotic object *O* is called with property key *P*, the following steps are taken:

1. Assert: IsPropertyKey(*P*) is **true**.
2. Assert: *O* is an Integer-Indexed exotic object.
3. If Type(*P*) is String, then
    a. Let *numericIndex* be ! CanonicalNumericIndexString(*P*).
    b. If *numericIndex* is not **undefined**, then
        i. Let *value* be ? IntegerIndexedElementGet(*O*, *numericIndex*).
        ii. If *value* is **undefined**, return **undefined**.
        iii. Return the PropertyDescriptor { [[Value]]: *value*, [[Writable]]: **true**, [[Enumerable]]: **true**,

[[Configurable]]: **false** }.

4. Return OrdinaryGetOwnProperty(*O*, *P*).

9.4.5.2 [[HasProperty]] (*P*)

When the [[HasProperty]] internal method of an Integer-Indexed exotic object *O* is called with property key *P*, the following steps are taken:

1. Assert: IsPropertyKey(*P*) is **true**.
2. Assert: *O* is an Integer-Indexed exotic object.
3. If Type(*P*) is String, then
   a. Let *numericIndex* be ! CanonicalNumericIndexString(*P*).
   b. If *numericIndex* is not **undefined**, then
      i. Let *buffer* be *O*.[[ViewedArrayBuffer]].
      ii. If IsDetachedBuffer(*buffer*) is **true**, throw a **TypeError** exception.
      iii. If ! IsValidIntegerIndex(*O*, *numericIndex*) is **false**, return **false**.
      iv. Return **true**.
4. Return ? OrdinaryHasProperty(*O*, *P*).

9.4.5.3 [[DefineOwnProperty]] (*P*, *Desc*)

When the [[DefineOwnProperty]] internal method of an Integer-Indexed exotic object *O* is called with property key *P*, and Property Descriptor *Desc*, the following steps are taken:

1. Assert: IsPropertyKey(*P*) is **true**.
2. Assert: *O* is an Integer-Indexed exotic object.
3. If Type(*P*) is String, then
   a. Let *numericIndex* be ! CanonicalNumericIndexString(*P*).
   b. If *numericIndex* is not **undefined**, then
      i. If ! IsValidIntegerIndex(*O*, *numericIndex*) is **false**, return **false**.
      ii. If IsAccessorDescriptor(*Desc*) is **true**, return **false**.
      iii. If *Desc* has a [[Configurable]] field and if *Desc*.[[Configurable]] is **true**, return **false**.
      iv. If *Desc* has an [[Enumerable]] field and if *Desc*.[[Enumerable]] is **false**, return **false**.
      v. If *Desc* has a [[Writable]] field and if *Desc*.[[Writable]] is **false**, return **false**.
      vi. If *Desc* has a [[Value]] field, then
         1. Let *value* be *Desc*.[[Value]].
         2. Return ? IntegerIndexedElementSet(*O*, *numericIndex*, *value*).
      vii. Return **true**.
4. Return ! OrdinaryDefineOwnProperty(*O*, *P*, *Desc*).

9.4.5.4 [[Get]] (*P*, *Receiver*)

When the [[Get]] internal method of an Integer-Indexed exotic object *O* is called with property key *P* and ECMAScript language value *Receiver*, the following steps are taken:

1. Assert: IsPropertyKey(*P*) is **true**.
2. If Type(*P*) is String, then
   a. Let *numericIndex* be ! CanonicalNumericIndexString(*P*).
   b. If *numericIndex* is not **undefined**, then

i. Return ? IntegerIndexedElementGet(*O*, *numericIndex*).

3. Return ? OrdinaryGet(*O*, *P*, *Receiver*).

9.4.5.5 [[Set]] (*P*, *V*, *Receiver*)

When the [[Set]] internal method of an Integer-Indexed exotic object *O* is called with property key *P*, value *V*, and ECMAScript language value *Receiver*, the following steps are taken:

1. Assert: IsPropertyKey(*P*) is **true**.
2. If Type(*P*) is String, then
   a. Let *numericIndex* be ! CanonicalNumericIndexString(*P*).
   b. If *numericIndex* is not **undefined**, then
      i. Return ? IntegerIndexedElementSet(*O*, *numericIndex*, *V*).
3. Return ? OrdinarySet(*O*, *P*, *V*, *Receiver*).

9.4.5.6 [[OwnPropertyKeys]] ( )

When the [[OwnPropertyKeys]] internal method of an Integer-Indexed exotic object *O* is called, the following steps are taken:

1. Let *keys* be a new empty List.
2. Assert: *O* is an Integer-Indexed exotic object.
3. Let *len* be *O*.[[ArrayLength]].
4. For each integer *i* starting with 0 such that *i* < *len*, in ascending order, do
   a. Add ! ToString(*i*) as the last element of *keys*.
5. For each own property key *P* of *O* such that Type(*P*) is String and *P* is not an integer index, in ascending chronological order of property creation, do
   a. Add *P* as the last element of *keys*.
6. For each own property key *P* of *O* such that Type(*P*) is Symbol, in ascending chronological order of property creation, do
   a. Add *P* as the last element of *keys*.
7. Return *keys*.

9.4.5.7 IntegerIndexedObjectCreate (*prototype*)

The abstract operation IntegerIndexedObjectCreate is used to specify the creation of new Integer-Indexed exotic objects. IntegerIndexedObjectCreate performs the following steps:

1. Let *internalSlotsList* be « [[Prototype]], [[Extensible]], [[ViewedArrayBuffer]], [[TypedArrayName]], [[ContentType]], [[ByteLength]], [[ByteOffset]], [[ArrayLength]] ».
2. Let *A* be ! MakeBasicObject(*internalSlotsList*).
3. Set *A*.[[GetOwnProperty]] as specified in 9.4.5.1.
4. Set *A*.[[HasProperty]] as specified in 9.4.5.2.
5. Set *A*.[[DefineOwnProperty]] as specified in 9.4.5.3.
6. Set *A*.[[Get]] as specified in 9.4.5.4.
7. Set *A*.[[Set]] as specified in 9.4.5.5.
8. Set *A*.[[OwnPropertyKeys]] as specified in 9.4.5.6.
9. Set *A*.[[Prototype]] to *prototype*.
10. Return *A*.

9.4.5.8 IsValidIntegerIndex (*O*, *index*)

The abstract operation IsValidIntegerIndex with arguments *O* and *index* performs the following steps:

1. Assert: *O* is an Integer-Indexed exotic object.
2. Assert: Type(*index*) is Number.
3. If ! IsInteger(*index*) is **false**, return **false**.
4. If *index* is **-0**, return **false**.
5. If *index* < 0 or *index* ≥ *O*.[[ArrayLength]], return **false**.
6. Return **true**.

9.4.5.9 IntegerIndexedElementGet (*O*, *index*)

The abstract operation IntegerIndexedElementGet with arguments *O* and *index* performs the following steps:

1. Assert: *O* is an Integer-Indexed exotic object.
2. Assert: Type(*index*) is Number.
3. Let *buffer* be *O*.[[ViewedArrayBuffer]].
4. If IsDetachedBuffer(*buffer*) is **true**, throw a **TypeError** exception.
5. If ! IsValidIntegerIndex(*O*, *index*) is **false**, return **undefined**.
6. Let *offset* be *O*.[[ByteOffset]].
7. Let *arrayTypeName* be the String value of *O*.[[TypedArrayName]].
8. Let *elementSize* be the Element Size value specified in Table 61 for *arrayTypeName*.
9. Let *indexedPosition* be (*index* × *elementSize*) + *offset*.
10. Let *elementType* be the Element Type value in Table 61 for *arrayTypeName*.
11. Return GetValueFromBuffer(*buffer*, *indexedPosition*, *elementType*, **true**, Unordered).

9.4.5.10 IntegerIndexedElementSet (*O*, *index*, *value*)

The abstract operation IntegerIndexedElementSet with arguments *O*, *index*, and *value* performs the following steps:

1. Assert: *O* is an Integer-Indexed exotic object.
2. Assert: Type(*index*) is Number.
3. If *O*.[[ContentType]] is BigInt, let *numValue* be ? ToBigInt(*value*).
4. Otherwise, let *numValue* be ? ToNumber(*value*).
5. Let *buffer* be *O*.[[ViewedArrayBuffer]].
6. If IsDetachedBuffer(*buffer*) is **true**, throw a **TypeError** exception.
7. If ! IsValidIntegerIndex(*O*, *index*) is **false**, return **false**.
8. Let *offset* be *O*.[[ByteOffset]].
9. Let *arrayTypeName* be the String value of *O*.[[TypedArrayName]].
10. Let *elementSize* be the Element Size value specified in Table 61 for *arrayTypeName*.
11. Let *indexedPosition* be (*index* × *elementSize*) + *offset*.
12. Let *elementType* be the Element Type value in Table 61 for *arrayTypeName*.
13. Perform SetValueInBuffer(*buffer*, *indexedPosition*, *elementType*, *numValue*, **true**, Unordered).
14. Return **true**.

9.4.6 Module Namespace Exotic Objects

A module namespace exotic object is an exotic object that exposes the bindings exported from an ECMAScript *Module*

(See 15.2.3). There is a one-to-one correspondence between the String-keyed own properties of a module namespace exotic object and the binding names exported by the *Module*. The exported bindings include any bindings that are indirectly exported using **`export *`** export items. Each String-valued own property key is the StringValue of the corresponding exported binding name. These are the only String-keyed properties of a module namespace exotic object. Each such property has the attributes { [[Writable]]: **true**, [[Enumerable]]: **true**, [[Configurable]]: **false** }. Module namespace exotic objects are not extensible.

An object is a *module namespace exotic object* if its [[SetPrototypeOf]], [[IsExtensible]], [[PreventExtensions]], [[GetOwnProperty]], [[DefineOwnProperty]], [[HasProperty]], [[Get]], [[Set]], [[Delete]], and [[OwnPropertyKeys]] internal methods use the definitions in this section, and its other essential internal methods use the definitions found in 9.1. These methods are installed by ModuleNamespaceCreate.

Module namespace exotic objects have the internal slots defined in Table 29.

Table 29: Internal Slots of Module Namespace Exotic Objects

Internal Slot	Type	Description
[[Module]]	Module Record	The Module Record whose exports this namespace exposes.
[[Exports]]	List of String	A List containing the String values of the exported names exposed as own properties of this object. The list is ordered as if an Array of those String values had been sorted using **`Array.prototype.sort`** using **undefined** as *comparefn*.
[[Prototype]]	Null	This slot always contains the value **null** (see 9.4.6.1).

Module namespace exotic objects provide alternative definitions for all of the internal methods except [[GetPrototypeOf]], which behaves as defined in 9.1.1.

9.4.6.1 [[SetPrototypeOf]] (*V*)

When the [[SetPrototypeOf]] internal method of a module namespace exotic object *O* is called with argument *V*, the following steps are taken:

1. Return ? SetImmutablePrototype(*O*, *V*).

9.4.6.2 [[IsExtensible]] ( )

When the [[IsExtensible]] internal method of a module namespace exotic object *O* is called, the following steps are taken:

1. Return **false**.

9.4.6.3 [[PreventExtensions]] ( )

When the [[PreventExtensions]] internal method of a module namespace exotic object *O* is called, the following steps are taken:

1. Return **true**.

9.4.6.4 [[GetOwnProperty]] (*P*)

When the [[GetOwnProperty]] internal method of a module namespace exotic object *O* is called with property key *P*, the following steps are taken:

1. If Type(*P*) is Symbol, return OrdinaryGetOwnProperty(*O*, *P*).
2. Let *exports* be *O*.[[Exports]].
3. If *P* is not an element of *exports*, return **undefined**.
4. Let *value* be ? *O*.[[Get]](*P*, *O*).
5. Return PropertyDescriptor { [[Value]]: *value*, [[Writable]]: **true**, [[Enumerable]]: **true**, [[Configurable]]: **false** }.

9.4.6.5 [[DefineOwnProperty]] (*P*, *Desc*)

When the [[DefineOwnProperty]] internal method of a module namespace exotic object *O* is called with property key *P* and Property Descriptor *Desc*, the following steps are taken:

1. If Type(*P*) is Symbol, return OrdinaryDefineOwnProperty(*O*, *P*, *Desc*).
2. Let *current* be ? *O*.[[GetOwnProperty]](*P*).
3. If *current* is **undefined**, return **false**.
4. If IsAccessorDescriptor(*Desc*) is **true**, return **false**.
5. If *Desc*.[[Writable]] is present and has value **false**, return **false**.
6. If *Desc*.[[Enumerable]] is present and has value **false**, return **false**.
7. If *Desc*.[[Configurable]] is present and has value **true**, return **false**.
8. If *Desc*.[[Value]] is present, return SameValue(*Desc*.[[Value]], *current*.[[Value]]).
9. Return **true**.

9.4.6.6 [[HasProperty]] (*P*)

When the [[HasProperty]] internal method of a module namespace exotic object *O* is called with property key *P*, the following steps are taken:

1. If Type(*P*) is Symbol, return OrdinaryHasProperty(*O*, *P*).
2. Let *exports* be *O*.[[Exports]].
3. If *P* is an element of *exports*, return **true**.
4. Return **false**.

9.4.6.7 [[Get]] (*P*, *Receiver*)

When the [[Get]] internal method of a module namespace exotic object *O* is called with property key *P* and ECMAScript language value *Receiver*, the following steps are taken:

1. Assert: IsPropertyKey(*P*) is **true**.
2. If Type(*P*) is Symbol, then
    a. Return ? OrdinaryGet(*O*, *P*, *Receiver*).
3. Let *exports* be *O*.[[Exports]].
4. If *P* is not an element of *exports*, return **undefined**.
5. Let *m* be *O*.[[Module]].

6. Let *binding* be ! *m*.ResolveExport(*P*).
7. Assert: *binding* is a ResolvedBinding Record.
8. Let *targetModule* be *binding*.[[Module]].
9. Assert: *targetModule* is not **undefined**.
10. If *binding*.[[BindingName]] is **"*namespace*"**, then
    a. Return ? GetModuleNamespace(*targetModule*).
11. Let *targetEnv* be *targetModule*.[[Environment]].
12. If *targetEnv* is **undefined**, throw a **ReferenceError** exception.
13. Let *targetEnvRec* be *targetEnv*'s EnvironmentRecord.
14. Return ? *targetEnvRec*.GetBindingValue(*binding*.[[BindingName]], **true**).

NOTE ResolveExport is side-effect free. Each time this operation is called with a specific *exportName*, *resolveSet* pair as arguments it must return the same result. An implementation might choose to pre-compute or cache the ResolveExport results for the [[Exports]] of each module namespace exotic object.

9.4.6.8 [[Set]] (*P*, *V*, *Receiver*)

When the [[Set]] internal method of a module namespace exotic object *O* is called with property key *P*, value *V*, and ECMAScript language value *Receiver*, the following steps are taken:

1. Return **false**.

9.4.6.9 [[Delete]] (*P*)

When the [[Delete]] internal method of a module namespace exotic object *O* is called with property key *P*, the following steps are taken:

1. Assert: IsPropertyKey(*P*) is **true**.
2. If Type(*P*) is Symbol, then
    a. Return ? OrdinaryDelete(*O*, *P*).
3. Let *exports* be *O*.[[Exports]].
4. If *P* is an element of *exports*, return **false**.
5. Return **true**.

9.4.6.10 [[OwnPropertyKeys]] ( )

When the [[OwnPropertyKeys]] internal method of a module namespace exotic object *O* is called, the following steps are taken:

1. Let *exports* be a copy of *O*.[[Exports]].
2. Let *symbolKeys* be ! OrdinaryOwnPropertyKeys(*O*).
3. Append all the entries of *symbolKeys* to the end of *exports*.
4. Return *exports*.

9.4.6.11 ModuleNamespaceCreate (*module*, *exports*)

The abstract operation ModuleNamespaceCreate with arguments *module*, and *exports* is used to specify the creation of

new module namespace exotic objects. It performs the following steps:

1. Assert: *module* is a Module Record.
2. Assert: *module*.[[Namespace]] is **undefined**.
3. Assert: *exports* is a List of String values.
4. Let *internalSlotsList* be the internal slots listed in Table 29.
5. Let *M* be ! MakeBasicObject(*internalSlotsList*).
6. Set *M*'s essential internal methods to the definitions specified in 9.4.6.
7. Set *M*.[[Prototype]] to **null**.
8. Set *M*.[[Module]] to *module*.
9. Let *sortedExports* be a new List containing the same values as the list *exports* where the values are ordered as if an Array of the same values had been sorted using `Array.prototype.sort` using **undefined** as *comparefn*.
10. Set *M*.[[Exports]] to *sortedExports*.
11. Create own properties of *M* corresponding to the definitions in 26.3.
12. Set *module*.[[Namespace]] to *M*.
13. Return *M*.

9.4.7 Immutable Prototype Exotic Objects

An immutable prototype exotic object is an exotic object that has a [[Prototype]] internal slot that will not change once it is initialized.

An object is an *immutable prototype exotic object* if its [[SetPrototypeOf]] internal method uses the following implementation. (Its other essential internal methods may use any implementation, depending on the specific immutable prototype exotic object in question.)

> NOTE Unlike other exotic objects, there is not a dedicated creation abstract operation provided for immutable prototype exotic objects. This is because they are only used by %ObjectPrototype% and by host environments, and in host environments, the relevant objects are potentially exotic in other ways and thus need their own dedicated creation operation.

9.4.7.1 [[SetPrototypeOf]] (*V*)

When the [[SetPrototypeOf]] internal method of an immutable prototype exotic object *O* is called with argument *V*, the following steps are taken:

1. Return ? SetImmutablePrototype(*O*, *V*).

9.4.7.2 SetImmutablePrototype (*O*, *V*)

When the SetImmutablePrototype abstract operation is called with arguments *O* and *V*, the following steps are taken:

1. Assert: Either Type(*V*) is Object or Type(*V*) is Null.
2. Let *current* be ? *O*.[[GetPrototypeOf]]().
3. If SameValue(*V*, *current*) is **true**, return **true**.
4. Return **false**.

9.5 Proxy Object Internal Methods and Internal Slots

A proxy object is an exotic object whose essential internal methods are partially implemented using ECMAScript code. Every proxy object has an internal slot called [[ProxyHandler]]. The value of [[ProxyHandler]] is an object, called the proxy's *handler object*, or **null**. Methods (see Table 30) of a handler object may be used to augment the implementation for one or more of the proxy object's internal methods. Every proxy object also has an internal slot called [[ProxyTarget]] whose value is either an object or the **null** value. This object is called the proxy's *target object*.

An object is a *Proxy exotic object* if its essential internal methods (including [[Call]] and [[Construct]], if applicable) use the definitions in this section. These internal methods are installed in ProxyCreate.

Table 30: Proxy Handler Methods

Internal Method	Handler Method
[[GetPrototypeOf]]	`getPrototypeOf`
[[SetPrototypeOf]]	`setPrototypeOf`
[[IsExtensible]]	`isExtensible`
[[PreventExtensions]]	`preventExtensions`
[[GetOwnProperty]]	`getOwnPropertyDescriptor`
[[DefineOwnProperty]]	`defineProperty`
[[HasProperty]]	`has`
[[Get]]	`get`
[[Set]]	`set`
[[Delete]]	`deleteProperty`
[[OwnPropertyKeys]]	`ownKeys`
[[Call]]	`apply`
[[Construct]]	`construct`

When a handler method is called to provide the implementation of a proxy object internal method, the handler method is passed the proxy's target object as a parameter. A proxy's handler object does not necessarily have a method corresponding to every essential internal method. Invoking an internal method on the proxy results in the invocation of the corresponding internal method on the proxy's target object if the handler object does not have a method corresponding to the internal trap.

The [[ProxyHandler]] and [[ProxyTarget]] internal slots of a proxy object are always initialized when the object is created and typically may not be modified. Some proxy objects are created in a manner that permits them to be subsequently *revoked*. When a proxy is revoked, its [[ProxyHandler]] and [[ProxyTarget]] internal slots are set to **null** causing subsequent invocations of internal methods on that proxy object to throw a **TypeError** exception.

Because proxy objects permit the implementation of internal methods to be provided by arbitrary ECMAScript code,

it is possible to define a proxy object whose handler methods violates the invariants defined in 6.1.7.3. Some of the internal method invariants defined in 6.1.7.3 are essential integrity invariants. These invariants are explicitly enforced by the proxy object internal methods specified in this section. An ECMAScript implementation must be robust in the presence of all possible invariant violations.

In the following algorithm descriptions, assume *O* is an ECMAScript proxy object, *P* is a property key value, *V* is any ECMAScript language value and *Desc* is a Property Descriptor record.

9.5.1 [[GetPrototypeOf]] ( )

When the [[GetPrototypeOf]] internal method of a Proxy exotic object *O* is called, the following steps are taken:

1. Let *handler* be *O*.[[ProxyHandler]].
2. If *handler* is **null**, throw a **TypeError** exception.
3. Assert: Type(*handler*) is Object.
4. Let *target* be *O*.[[ProxyTarget]].
5. Let *trap* be ? GetMethod(*handler*, **"getPrototypeOf"**).
6. If *trap* is **undefined**, then
    a. Return ? *target*.[[GetPrototypeOf]]().
7. Let *handlerProto* be ? Call(*trap*, *handler*, « *target* »).
8. If Type(*handlerProto*) is neither Object nor Null, throw a **TypeError** exception.
9. Let *extensibleTarget* be ? IsExtensible(*target*).
10. If *extensibleTarget* is **true**, return *handlerProto*.
11. Let *targetProto* be ? *target*.[[GetPrototypeOf]]().
12. If SameValue(*handlerProto*, *targetProto*) is **false**, throw a **TypeError** exception.
13. Return *handlerProto*.

NOTE [[GetPrototypeOf]] for proxy objects enforces the following invariants:

- The result of [[GetPrototypeOf]] must be either an Object or **null**.
- If the target object is not extensible, [[GetPrototypeOf]] applied to the proxy object must return the same value as [[GetPrototypeOf]] applied to the proxy object's target object.

9.5.2 [[SetPrototypeOf]] (*V*)

When the [[SetPrototypeOf]] internal method of a Proxy exotic object *O* is called with argument *V*, the following steps are taken:

1. Assert: Either Type(*V*) is Object or Type(*V*) is Null.
2. Let *handler* be *O*.[[ProxyHandler]].
3. If *handler* is **null**, throw a **TypeError** exception.
4. Assert: Type(*handler*) is Object.
5. Let *target* be *O*.[[ProxyTarget]].
6. Let *trap* be ? GetMethod(*handler*, **"setPrototypeOf"**).
7. If *trap* is **undefined**, then
    a. Return ? *target*.[[SetPrototypeOf]](*V*).
8. Let *booleanTrapResult* be ! ToBoolean(? Call(*trap*, *handler*, « *target*, *V* »)).

9. If *booleanTrapResult* is **false**, return **false**.
10. Let *extensibleTarget* be ? IsExtensible(*target*).
11. If *extensibleTarget* is **true**, return **true**.
12. Let *targetProto* be ? *target*.[[GetPrototypeOf]]().
13. If SameValue(*V*, *targetProto*) is **false**, throw a **TypeError** exception.
14. Return **true**.

NOTE [[SetPrototypeOf]] for proxy objects enforces the following invariants:

- The result of [[SetPrototypeOf]] is a Boolean value.
- If the target object is not extensible, the argument value must be the same as the result of [[GetPrototypeOf]] applied to target object.

9.5.3 [[IsExtensible]] ( )

When the [[IsExtensible]] internal method of a Proxy exotic object *O* is called, the following steps are taken:

1. Let *handler* be *O*.[[ProxyHandler]].
2. If *handler* is **null**, throw a **TypeError** exception.
3. Assert: Type(*handler*) is Object.
4. Let *target* be *O*.[[ProxyTarget]].
5. Let *trap* be ? GetMethod(*handler*, **"isExtensible"**).
6. If *trap* is **undefined**, then
   a. Return ? IsExtensible(*target*).
7. Let *booleanTrapResult* be ! ToBoolean(? Call(*trap*, *handler*, « *target* »)).
8. Let *targetResult* be ? IsExtensible(*target*).
9. If SameValue(*booleanTrapResult*, *targetResult*) is **false**, throw a **TypeError** exception.
10. Return *booleanTrapResult*.

NOTE [[IsExtensible]] for proxy objects enforces the following invariants:

- The result of [[IsExtensible]] is a Boolean value.
- [[IsExtensible]] applied to the proxy object must return the same value as [[IsExtensible]] applied to the proxy object's target object with the same argument.

9.5.4 [[PreventExtensions]] ( )

When the [[PreventExtensions]] internal method of a Proxy exotic object *O* is called, the following steps are taken:

1. Let *handler* be *O*.[[ProxyHandler]].
2. If *handler* is **null**, throw a **TypeError** exception.
3. Assert: Type(*handler*) is Object.
4. Let *target* be *O*.[[ProxyTarget]].
5. Let *trap* be ? GetMethod(*handler*, **"preventExtensions"**).
6. If *trap* is **undefined**, then
   a. Return ? *target*.[[PreventExtensions]]().

7. Let *booleanTrapResult* be ! ToBoolean(? Call(*trap*, *handler*, « *target* »)).
8. If *booleanTrapResult* is **true**, then
    a. Let *extensibleTarget* be ? IsExtensible(*target*).
    b. If *extensibleTarget* is **true**, throw a **TypeError** exception.
9. Return *booleanTrapResult*.

NOTE [[PreventExtensions]] for proxy objects enforces the following invariants:

- The result of [[PreventExtensions]] is a Boolean value.
- [[PreventExtensions]] applied to the proxy object only returns **true** if [[IsExtensible]] applied to the proxy object's target object is **false**.

9.5.5 [[GetOwnProperty]] (*P*)

When the [[GetOwnProperty]] internal method of a Proxy exotic object *O* is called with property key *P*, the following steps are taken:

1. Assert: IsPropertyKey(*P*) is **true**.
2. Let *handler* be *O*.[[ProxyHandler]].
3. If *handler* is **null**, throw a **TypeError** exception.
4. Assert: Type(*handler*) is Object.
5. Let *target* be *O*.[[ProxyTarget]].
6. Let *trap* be ? GetMethod(*handler*, **"getOwnPropertyDescriptor"**).
7. If *trap* is **undefined**, then
    a. Return ? *target*.[[GetOwnProperty]](*P*).
8. Let *trapResultObj* be ? Call(*trap*, *handler*, « *target*, *P* »).
9. If Type(*trapResultObj*) is neither Object nor Undefined, throw a **TypeError** exception.
10. Let *targetDesc* be ? *target*.[[GetOwnProperty]](*P*).
11. If *trapResultObj* is **undefined**, then
    a. If *targetDesc* is **undefined**, return **undefined**.
    b. If *targetDesc*.[[Configurable]] is **false**, throw a **TypeError** exception.
    c. Let *extensibleTarget* be ? IsExtensible(*target*).
    d. If *extensibleTarget* is **false**, throw a **TypeError** exception.
    e. Return **undefined**.
12. Let *extensibleTarget* be ? IsExtensible(*target*).
13. Let *resultDesc* be ? ToPropertyDescriptor(*trapResultObj*).
14. Call CompletePropertyDescriptor(*resultDesc*).
15. Let *valid* be IsCompatiblePropertyDescriptor(*extensibleTarget*, *resultDesc*, *targetDesc*).
16. If *valid* is **false**, throw a **TypeError** exception.
17. If *resultDesc*.[[Configurable]] is **false**, then
    a. If *targetDesc* is **undefined** or *targetDesc*.[[Configurable]] is **true**, then
        i. Throw a **TypeError** exception.
    b. If *resultDesc* has a [[Writable]] field and *resultDesc*.[[Writable]] is **false**, then
        i. If *targetDesc*.[[Writable]] is **true**, throw a **TypeError** exception.
18. Return *resultDesc*.

NOTE [[GetOwnProperty]] for proxy objects enforces the following invariants:

- The result of [[GetOwnProperty]] must be either an Object or **undefined**.
- A property cannot be reported as non-existent, if it exists as a non-configurable own property of the target object.
- A property cannot be reported as non-existent, if the target object is not extensible, unless it does not exist as an own property of the target object.
- A property cannot be reported as existent, if the target object is not extensible, unless it exists as an own property of the target object.
- A property cannot be reported as non-configurable, unless it exists as a non-configurable own property of the target object.
- A property cannot be reported as both non-configurable and non-writable, unless it exists as a non-configurable, non-writable own property of the target object.

9.5.6 [[DefineOwnProperty]] (*P*, *Desc*)

When the [[DefineOwnProperty]] internal method of a Proxy exotic object *O* is called with property key *P* and Property Descriptor *Desc*, the following steps are taken:

1. Assert: IsPropertyKey(*P*) is **true**.
2. Let *handler* be *O*.[[ProxyHandler]].
3. If *handler* is **null**, throw a **TypeError** exception.
4. Assert: Type(*handler*) is Object.
5. Let *target* be *O*.[[ProxyTarget]].
6. Let *trap* be ? GetMethod(*handler*, **"defineProperty"**).
7. If *trap* is **undefined**, then
   a. Return ? *target*.[[DefineOwnProperty]](*P*, *Desc*).
8. Let *descObj* be FromPropertyDescriptor(*Desc*).
9. Let *booleanTrapResult* be ! ToBoolean(? Call(*trap*, *handler*, « *target*, *P*, *descObj* »)).
10. If *booleanTrapResult* is **false**, return **false**.
11. Let *targetDesc* be ? *target*.[[GetOwnProperty]](*P*).
12. Let *extensibleTarget* be ? IsExtensible(*target*).
13. If *Desc* has a [[Configurable]] field and if *Desc*.[[Configurable]] is **false**, then
    a. Let *settingConfigFalse* be **true**.
14. Else, let *settingConfigFalse* be **false**.
15. If *targetDesc* is **undefined**, then
    a. If *extensibleTarget* is **false**, throw a **TypeError** exception.
    b. If *settingConfigFalse* is **true**, throw a **TypeError** exception.
16. Else,
    a. If IsCompatiblePropertyDescriptor(*extensibleTarget*, *Desc*, *targetDesc*) is **false**, throw a **TypeError** exception.
    b. If *settingConfigFalse* is **true** and *targetDesc*.[[Configurable]] is **true**, throw a **TypeError** exception.
    c. If IsDataDescriptor(*targetDesc*) is **true**, *targetDesc*.[[Configurable]] is **false**, and *targetDesc*.[[Writable]] is **true**, then
       i. If *Desc* has a [[Writable]] field and *Desc*.[[Writable]] is **false**, throw a **TypeError** exception.
17. Return **true**.

NOTE [[DefineOwnProperty]] for proxy objects enforces the following invariants:

- The result of [[DefineOwnProperty]] is a Boolean value.
- A property cannot be added, if the target object is not extensible.
- A property cannot be non-configurable, unless there exists a corresponding non-configurable own property of the target object.
- A non-configurable property cannot be non-writable, unless there exists a corresponding non-configurable, non-writable own property of the target object.
- If a property has a corresponding target object property then applying the Property Descriptor of the property to the target object using [[DefineOwnProperty]] will not throw an exception.

9.5.7 [[HasProperty]] (*P*)

When the [[HasProperty]] internal method of a Proxy exotic object *O* is called with property key *P*, the following steps are taken:

1. Assert: IsPropertyKey(*P*) is **true**.
2. Let *handler* be *O*.[[ProxyHandler]].
3. If *handler* is **null**, throw a **TypeError** exception.
4. Assert: Type(*handler*) is Object.
5. Let *target* be *O*.[[ProxyTarget]].
6. Let *trap* be ? GetMethod(*handler*, **"has"**).
7. If *trap* is **undefined**, then
   a. Return ? *target*.[[HasProperty]](*P*).
8. Let *booleanTrapResult* be ! ToBoolean(? Call(*trap*, *handler*, « *target*, *P* »)).
9. If *booleanTrapResult* is **false**, then
   a. Let *targetDesc* be ? *target*.[[GetOwnProperty]](*P*).
   b. If *targetDesc* is not **undefined**, then
      i. If *targetDesc*.[[Configurable]] is **false**, throw a **TypeError** exception.
      ii. Let *extensibleTarget* be ? IsExtensible(*target*).
      iii. If *extensibleTarget* is **false**, throw a **TypeError** exception.
10. Return *booleanTrapResult*.

NOTE [[HasProperty]] for proxy objects enforces the following invariants:

- The result of [[HasProperty]] is a Boolean value.
- A property cannot be reported as non-existent, if it exists as a non-configurable own property of the target object.
- A property cannot be reported as non-existent, if it exists as an own property of the target object and the target object is not extensible.

9.5.8 [[Get]] (*P*, *Receiver*)

When the [[Get]] internal method of a Proxy exotic object *O* is called with property key *P* and ECMAScript language

value *Receiver*, the following steps are taken:

1. Assert: IsPropertyKey(*P*) is **true**.
2. Let *handler* be *O*.[[ProxyHandler]].
3. If *handler* is **null**, throw a **TypeError** exception.
4. Assert: Type(*handler*) is Object.
5. Let *target* be *O*.[[ProxyTarget]].
6. Let *trap* be ? GetMethod(*handler*, **"get"**).
7. If *trap* is **undefined**, then
    a. Return ? *target*.[[Get]](*P*, *Receiver*).
8. Let *trapResult* be ? Call(*trap*, *handler*, « *target*, *P*, *Receiver* »).
9. Let *targetDesc* be ? *target*.[[GetOwnProperty]](*P*).
10. If *targetDesc* is not **undefined** and *targetDesc*.[[Configurable]] is **false**, then
    a. If IsDataDescriptor(*targetDesc*) is **true** and *targetDesc*.[[Writable]] is **false**, then
        i. If SameValue(*trapResult*, *targetDesc*.[[Value]]) is **false**, throw a **TypeError** exception.
    b. If IsAccessorDescriptor(*targetDesc*) is **true** and *targetDesc*.[[Get]] is **undefined**, then
        i. If *trapResult* is not **undefined**, throw a **TypeError** exception.
11. Return *trapResult*.

NOTE [[Get]] for proxy objects enforces the following invariants:

- The value reported for a property must be the same as the value of the corresponding target object property if the target object property is a non-writable, non-configurable own data property.
- The value reported for a property must be **undefined** if the corresponding target object property is a non-configurable own accessor property that has **undefined** as its [[Get]] attribute.

9.5.9 [[Set]] (*P*, *V*, *Receiver*)

When the [[Set]] internal method of a Proxy exotic object *O* is called with property key *P*, value *V*, and ECMAScript language value *Receiver*, the following steps are taken:

1. Assert: IsPropertyKey(*P*) is **true**.
2. Let *handler* be *O*.[[ProxyHandler]].
3. If *handler* is **null**, throw a **TypeError** exception.
4. Assert: Type(*handler*) is Object.
5. Let *target* be *O*.[[ProxyTarget]].
6. Let *trap* be ? GetMethod(*handler*, **"set"**).
7. If *trap* is **undefined**, then
    a. Return ? *target*.[[Set]](*P*, *V*, *Receiver*).
8. Let *booleanTrapResult* be ! ToBoolean(? Call(*trap*, *handler*, « *target*, *P*, *V*, *Receiver* »)).
9. If *booleanTrapResult* is **false**, return **false**.
10. Let *targetDesc* be ? *target*.[[GetOwnProperty]](*P*).
11. If *targetDesc* is not **undefined** and *targetDesc*.[[Configurable]] is **false**, then
    a. If IsDataDescriptor(*targetDesc*) is **true** and *targetDesc*.[[Writable]] is **false**, then
        i. If SameValue(*V*, *targetDesc*.[[Value]]) is **false**, throw a **TypeError** exception.

b. If IsAccessorDescriptor(*targetDesc*) is **true**, then
    i. If *targetDesc*.[[Set]] is **undefined**, throw a **TypeError** exception.
12. Return **true**.

NOTE [[Set]] for proxy objects enforces the following invariants:

- The result of [[Set]] is a Boolean value.
- Cannot change the value of a property to be different from the value of the corresponding target object property if the corresponding target object property is a non-writable, non-configurable own data property.
- Cannot set the value of a property if the corresponding target object property is a non-configurable own accessor property that has **undefined** as its [[Set]] attribute.

9.5.10 [[Delete]] (*P*)

When the [[Delete]] internal method of a Proxy exotic object *O* is called with property key *P*, the following steps are taken:

1. Assert: IsPropertyKey(*P*) is **true**.
2. Let *handler* be *O*.[[ProxyHandler]].
3. If *handler* is **null**, throw a **TypeError** exception.
4. Assert: Type(*handler*) is Object.
5. Let *target* be *O*.[[ProxyTarget]].
6. Let *trap* be ? GetMethod(*handler*, **"deleteProperty"**).
7. If *trap* is **undefined**, then
    a. Return ? *target*.[[Delete]](*P*).
8. Let *booleanTrapResult* be ! ToBoolean(? Call(*trap*, *handler*, « *target*, *P* »)).
9. If *booleanTrapResult* is **false**, return **false**.
10. Let *targetDesc* be ? *target*.[[GetOwnProperty]](*P*).
11. If *targetDesc* is **undefined**, return **true**.
12. If *targetDesc*.[[Configurable]] is **false**, throw a **TypeError** exception.
13. Let *extensibleTarget* be ? IsExtensible(*target*).
14. If *extensibleTarget* is **false**, throw a **TypeError** exception.
15. Return **true**.

NOTE [[Delete]] for proxy objects enforces the following invariants:

- The result of [[Delete]] is a Boolean value.
- A property cannot be reported as deleted, if it exists as a non-configurable own property of the target object.
- A property cannot be reported as deleted, if it exists as an own property of the target object and the target object is non-extensible.

9.5.11 [[OwnPropertyKeys]] ( )

When the [[OwnPropertyKeys]] internal method of a Proxy exotic object *O* is called, the following steps are taken:

1. Let *handler* be *O*.[[ProxyHandler]].
2. If *handler* is **null**, throw a **TypeError** exception.
3. Assert: Type(*handler*) is Object.
4. Let *target* be *O*.[[ProxyTarget]].
5. Let *trap* be ? GetMethod(*handler*, **"ownKeys"**).
6. If *trap* is **undefined**, then
    a. Return ? *target*.[[OwnPropertyKeys]]().
7. Let *trapResultArray* be ? Call(*trap*, *handler*, « *target* »).
8. Let *trapResult* be ? CreateListFromArrayLike(*trapResultArray*, « String, Symbol »).
9. If *trapResult* contains any duplicate entries, throw a **TypeError** exception.
10. Let *extensibleTarget* be ? IsExtensible(*target*).
11. Let *targetKeys* be ? *target*.[[OwnPropertyKeys]]().
12. Assert: *targetKeys* is a List containing only String and Symbol values.
13. Assert: *targetKeys* contains no duplicate entries.
14. Let *targetConfigurableKeys* be a new empty List.
15. Let *targetNonconfigurableKeys* be a new empty List.
16. For each element *key* of *targetKeys*, do
    a. Let *desc* be ? *target*.[[GetOwnProperty]](*key*).
    b. If *desc* is not **undefined** and *desc*.[[Configurable]] is **false**, then
        i. Append *key* as an element of *targetNonconfigurableKeys*.
    c. Else,
        i. Append *key* as an element of *targetConfigurableKeys*.
17. If *extensibleTarget* is **true** and *targetNonconfigurableKeys* is empty, then
    a. Return *trapResult*.
18. Let *uncheckedResultKeys* be a new List which is a copy of *trapResult*.
19. For each *key* that is an element of *targetNonconfigurableKeys*, do
    a. If *key* is not an element of *uncheckedResultKeys*, throw a **TypeError** exception.
    b. Remove *key* from *uncheckedResultKeys*.
20. If *extensibleTarget* is **true**, return *trapResult*.
21. For each *key* that is an element of *targetConfigurableKeys*, do
    a. If *key* is not an element of *uncheckedResultKeys*, throw a **TypeError** exception.
    b. Remove *key* from *uncheckedResultKeys*.
22. If *uncheckedResultKeys* is not empty, throw a **TypeError** exception.
23. Return *trapResult*.

NOTE [[OwnPropertyKeys]] for proxy objects enforces the following invariants:

- The result of [[OwnPropertyKeys]] is a List.
- The returned List contains no duplicate entries.
- The Type of each result List element is either String or Symbol.
- The result List must contain the keys of all non-configurable own properties of the target object.
- If the target object is not extensible, then the result List must contain all the keys of the own properties of the target object and no other values.

9.5.12 [[Call]] (*thisArgument*, *argumentsList*)

The [[Call]] internal method of a Proxy exotic object *O* is called with parameters *thisArgument* and *argumentsList*, a List of ECMAScript language values. The following steps are taken:

1. Let *handler* be *O*.[[ProxyHandler]].
2. If *handler* is **null**, throw a **TypeError** exception.
3. Assert: Type(*handler*) is Object.
4. Let *target* be *O*.[[ProxyTarget]].
5. Let *trap* be ? GetMethod(*handler*, **"apply"**).
6. If *trap* is **undefined**, then
    a. Return ? Call(*target*, *thisArgument*, *argumentsList*).
7. Let *argArray* be ! CreateArrayFromList(*argumentsList*).
8. Return ? Call(*trap*, *handler*, « *target*, *thisArgument*, *argArray* »).

NOTE A Proxy exotic object only has a [[Call]] internal method if the initial value of its [[ProxyTarget]] internal slot is an object that has a [[Call]] internal method.

9.5.13 [[Construct]] (*argumentsList*, *newTarget*)

The [[Construct]] internal method of a Proxy exotic object *O* is called with parameters *argumentsList* which is a possibly empty List of ECMAScript language values and *newTarget*. The following steps are taken:

1. Let *handler* be *O*.[[ProxyHandler]].
2. If *handler* is **null**, throw a **TypeError** exception.
3. Assert: Type(*handler*) is Object.
4. Let *target* be *O*.[[ProxyTarget]].
5. Assert: IsConstructor(*target*) is **true**.
6. Let *trap* be ? GetMethod(*handler*, **"construct"**).
7. If *trap* is **undefined**, then
    a. Return ? Construct(*target*, *argumentsList*, *newTarget*).
8. Let *argArray* be ! CreateArrayFromList(*argumentsList*).
9. Let *newObj* be ? Call(*trap*, *handler*, « *target*, *argArray*, *newTarget* »).
10. If Type(*newObj*) is not Object, throw a **TypeError** exception.
11. Return *newObj*.

NOTE 1 A Proxy exotic object only has a [[Construct]] internal method if the initial value of its [[ProxyTarget]] internal slot is an object that has a [[Construct]] internal method.

NOTE 2 [[Construct]] for proxy objects enforces the following invariants:

- The result of [[Construct]] must be an Object.

9.5.14 ProxyCreate (*target*, *handler*)

The abstract operation ProxyCreate with arguments *target* and *handler* is used to specify the creation of new Proxy exotic objects. It performs the following steps:

1. If Type(*target*) is not Object, throw a **TypeError** exception.
2. If *target* is a Proxy exotic object and *target*.[[ProxyHandler]] is **null**, throw a **TypeError** exception.
3. If Type(*handler*) is not Object, throw a **TypeError** exception.
4. If *handler* is a Proxy exotic object and *handler*.[[ProxyHandler]] is **null**, throw a **TypeError** exception.
5. Let *P* be ! MakeBasicObject(« [[ProxyHandler]], [[ProxyTarget]] »).
6. Set *P*'s essential internal methods, except for [[Call]] and [[Construct]], to the definitions specified in 9.5.
7. If IsCallable(*target*) is **true**, then
    a. Set *P*.[[Call]] as specified in 9.5.12.
    b. If IsConstructor(*target*) is **true**, then
        i. Set *P*.[[Construct]] as specified in 9.5.13.
8. Set *P*.[[ProxyTarget]] to *target*.
9. Set *P*.[[ProxyHandler]] to *handler*.
10. Return *P*.

10 ECMAScript Language: Source Code

10.1 Source Text

Syntax

SourceCharacter **::**
    any Unicode code point

ECMAScript code is expressed using Unicode. ECMAScript source text is a sequence of code points. All Unicode code point values from U+0000 to U+10FFFF, including surrogate code points, may occur in source text where permitted by the ECMAScript grammars. The actual encodings used to store and interchange ECMAScript source text is not relevant to this specification. Regardless of the external source text encoding, a conforming ECMAScript implementation processes the source text as if it was an equivalent sequence of *SourceCharacter* values, each *SourceCharacter* being a Unicode code point. Conforming ECMAScript implementations are not required to perform any normalization of source text, or behave as though they were performing normalization of source text.

The components of a combining character sequence are treated as individual Unicode code points even though a user might think of the whole sequence as a single character.

NOTE In string literals, regular expression literals, template literals and identifiers, any Unicode code point may also be expressed using Unicode escape sequences that explicitly express a code point's numeric value. Within a comment, such an escape sequence is effectively ignored as part of the comment.

ECMAScript differs from the Java programming language in the behaviour of Unicode escape sequences. In a Java program, if the Unicode escape sequence **`\u000A`**, for example, occurs within a single-line comment, it is interpreted as a line terminator (Unicode code point U+000A is LINE FEED (LF)) and therefore the next code point is not part of the comment. Similarly, if the Unicode escape sequence **`\u000A`** occurs within a string literal in a Java program, it is likewise interpreted as a line terminator, which is not allowed within a string literal—one must write **`\n`** instead of **`\u000A`** to cause a LINE FEED (LF) to be part of the String value of a string literal. In an ECMAScript program, a Unicode escape sequence occurring within a comment is never interpreted and therefore cannot contribute to termination of the comment. Similarly, a Unicode escape sequence occurring within a string literal in an ECMAScript program always contributes to the literal and is never interpreted as a line terminator or as a code point that might terminate the string literal.

10.1.1 Static Semantics: UTF16Encoding (*cp*)

The UTF16Encoding of a numeric code point value, *cp*, is determined as follows:

1. Assert: 0 ≤ *cp* ≤ 0x10FFFF.
2. If *cp* ≤ 0xFFFF, return *cp*.
3. Let *cu1* be floor((*cp* - 0x10000) / 0x400) + 0xD800.
4. Let *cu2* be ((*cp* - 0x10000) modulo 0x400) + 0xDC00.
5. Return the code unit sequence consisting of *cu1* followed by *cu2*.

10.1.2 Static Semantics: UTF16Encode (*text*)

This abstract operation converts *text*, a sequence of Unicode code points, into a String value, as described in 6.1.4.

1. Return the string-concatenation of the code units that are the UTF16Encoding of each code point in *text*, in order.

10.1.3 Static Semantics: UTF16DecodeSurrogatePair (*lead*, *trail*)

Two code units, *lead* and *trail*, that form a UTF-16 surrogate pair are converted to a code point by performing the following steps:

1. Assert: *lead* is a leading surrogate and *trail* is a trailing surrogate.
2. Let *cp* be (*lead* - 0xD800) × 0x400 + (*trail* - 0xDC00) + 0x10000.
3. Return the code point *cp*.

10.1.4 Static Semantics: CodePointAt (*string*, *position*)

The abstract operation CodePointAt interprets a String *string* as a sequence of UTF-16 encoded code points, as

described in 6.1.4, and reads from it a single code point starting with the code unit at index *position*. When called, the following steps are performed:

1. Let *size* be the length of *string*.
2. Assert: *position* ≥ 0 and *position* < *size*.
3. Let *first* be the code unit at index *position* within *string*.
4. Let *cp* be the code point whose numeric value is that of *first*.
5. If *first* is not a leading surrogate or trailing surrogate, then
    a. Return the Record { [[CodePoint]]: *cp*, [[CodeUnitCount]]: 1, [[IsUnpairedSurrogate]]: **false** }.
6. If *first* is a trailing surrogate or *position* + 1 = *size*, then
    a. Return the Record { [[CodePoint]]: *cp*, [[CodeUnitCount]]: 1, [[IsUnpairedSurrogate]]: **true** }.
7. Let *second* be the code unit at index *position* + 1 within *string*.
8. If *second* is not a trailing surrogate, then
    a. Return the Record { [[CodePoint]]: *cp*, [[CodeUnitCount]]: 1, [[IsUnpairedSurrogate]]: **true** }.
9. Set *cp* to ! UTF16DecodeSurrogatePair(*first*, *second*).
10. Return the Record { [[CodePoint]]: *cp*, [[CodeUnitCount]]: 2, [[IsUnpairedSurrogate]]: **false** }.

10.1.5 Static Semantics: UTF16DecodeString (*string*)

This abstract operation accepts a String value *string* and returns the sequence of Unicode code points that results from interpreting it as UTF-16 encoded Unicode text as described in 6.1.4.

1. Let *codePoints* be a new empty List.
2. Let *size* be the length of *string*.
3. Let *position* be 0.
4. Repeat, while *position* < *size*,
    a. Let *cp* be ! CodePointAt(*string*, *position*).
    b. Append *cp*.[[CodePoint]] to *codePoints*.
    c. Set *position* to *position* + *cp*.[[CodeUnitCount]].
5. Return *codePoints*.

10.2 Types of Source Code

There are four types of ECMAScript code:

- *Global code* is source text that is treated as an ECMAScript *Script*. The global code of a particular *Script* does not include any source text that is parsed as part of a *FunctionDeclaration*, *FunctionExpression*, *GeneratorDeclaration*, *GeneratorExpression*, *AsyncFunctionDeclaration*, *AsyncFunctionExpression*, *AsyncGeneratorDeclaration*, *AsyncGeneratorExpression*, *MethodDefinition*, *ArrowFunction*, *AsyncArrowFunction*, *ClassDeclaration*, or *ClassExpression*.
- *Eval code* is the source text supplied to the built-in **`eval`** function. More precisely, if the parameter to the built-in **`eval`** function is a String, it is treated as an ECMAScript *Script*. The eval code for a particular invocation of **`eval`** is the global code portion of that *Script*.
- *Function code* is source text that is parsed to supply the value of the [[ECMAScriptCode]] and [[FormalParameters]] internal slots (see 9.2) of an ECMAScript function object. The function code of a particular ECMAScript function does not include any source text that is parsed as the function code of a nested *FunctionDeclaration*, *FunctionExpression*, *GeneratorDeclaration*, *GeneratorExpression*, *AsyncFunctionDeclaration*,

AsyncFunctionExpression, *AsyncGeneratorDeclaration*, *AsyncGeneratorExpression*, *MethodDefinition*, *ArrowFunction*, *AsyncArrowFunction*, *ClassDeclaration*, or *ClassExpression*.

In addition, if the source text referred to above is parsed as:

- the *FormalParameters* and *FunctionBody* of a *FunctionDeclaration* or *FunctionExpression*,
- the *FormalParameters* and *GeneratorBody* of a *GeneratorDeclaration* or *GeneratorExpression*,
- the *FormalParameters* and *AsyncFunctionBody* of an *AsyncFunctionDeclaration* or *AsyncFunctionExpression*, or
- the *FormalParameters* and *AsyncGeneratorBody* of an *AsyncGeneratorDeclaration* or *AsyncGeneratorExpression*,

then the source text matching the *BindingIdentifier* (if any) of that declaration or expression is also included in the function code of the corresponding function.

- *Module code* is source text that is code that is provided as a *ModuleBody*. It is the code that is directly evaluated when a module is initialized. The module code of a particular module does not include any source text that is parsed as part of a nested *FunctionDeclaration*, *FunctionExpression*, *GeneratorDeclaration*, *GeneratorExpression*, *AsyncFunctionDeclaration*, *AsyncFunctionExpression*, *AsyncGeneratorDeclaration*, *AsyncGeneratorExpression*, *MethodDefinition*, *ArrowFunction*, *AsyncArrowFunction*, *ClassDeclaration*, or *ClassExpression*.

NOTE 1 Function code is generally provided as the bodies of Function Definitions (14.1), Arrow Function Definitions (14.2), Method Definitions (14.3), Generator Function Definitions (14.4), Async Function Definitions (14.7), Async Generator Function Definitions (14.5), and Async Arrow Functions (14.8). Function code is also derived from the arguments to the **`Function`** constructor (19.2.1.1), the **`GeneratorFunction`** constructor (25.2.1.1), and the **`AsyncFunction`** constructor (25.7.1.1).

NOTE 2 The practical effect of including the *BindingIdentifier* in function code is that the Early Errors for strict mode code are applied to a *BindingIdentifier* that is the name of a function whose body contains a "use strict" directive, even if the surrounding code is not strict mode code.

10.2.1 Strict Mode Code

An ECMAScript *Script* syntactic unit may be processed using either unrestricted or strict mode syntax and semantics. Code is interpreted as *strict mode code* in the following situations:

- Global code is strict mode code if it begins with a Directive Prologue that contains a Use Strict Directive.
- Module code is always strict mode code.
- All parts of a *ClassDeclaration* or a *ClassExpression* are strict mode code.
- Eval code is strict mode code if it begins with a Directive Prologue that contains a Use Strict Directive or if the call to **`eval`** is a direct eval that is contained in strict mode code.
- Function code is strict mode code if the associated *FunctionDeclaration*, *FunctionExpression*, *GeneratorDeclaration*, *GeneratorExpression*, *AsyncFunctionDeclaration*, *AsyncFunctionExpression*, *AsyncGeneratorDeclaration*, *AsyncGeneratorExpression*, *MethodDefinition*, *ArrowFunction*, or *AsyncArrowFunction* is contained in strict mode code or if the code that produces the value of the function's [[ECMAScriptCode]] internal slot begins with a Directive Prologue that contains a Use Strict Directive.

- Function code that is supplied as the arguments to the built-in **`Function`**, **`Generator`**, **`AsyncFunction`**, and **`AsyncGenerator`** constructors is strict mode code if the last argument is a String that when processed is a *FunctionBody* that begins with a Directive Prologue that contains a Use Strict Directive.

ECMAScript code that is not strict mode code is called *non-strict code*.

10.2.2 Non-ECMAScript Functions

An ECMAScript implementation may support the evaluation of function exotic objects whose evaluative behaviour is expressed in some implementation-defined form of executable code other than via ECMAScript code. Whether a function object is an ECMAScript code function or a non-ECMAScript function is not semantically observable from the perspective of an ECMAScript code function that calls or is called by such a non-ECMAScript function.

11 ECMAScript Language: Lexical Grammar

The source text of an ECMAScript *Script* or *Module* is first converted into a sequence of input elements, which are tokens, line terminators, comments, or white space. The source text is scanned from left to right, repeatedly taking the longest possible sequence of code points as the next input element.

There are several situations where the identification of lexical input elements is sensitive to the syntactic grammar context that is consuming the input elements. This requires multiple goal symbols for the lexical grammar. The *InputElementRegExpOrTemplateTail* goal is used in syntactic grammar contexts where a *RegularExpressionLiteral*, a *TemplateMiddle*, or a *TemplateTail* is permitted. The *InputElementRegExp* goal symbol is used in all syntactic grammar contexts where a *RegularExpressionLiteral* is permitted but neither a *TemplateMiddle*, nor a *TemplateTail* is permitted. The *InputElementTemplateTail* goal is used in all syntactic grammar contexts where a *TemplateMiddle* or a *TemplateTail* is permitted but a *RegularExpressionLiteral* is not permitted. In all other contexts, *InputElementDiv* is used as the lexical goal symbol.

NOTE The use of multiple lexical goals ensures that there are no lexical ambiguities that would affect automatic semicolon insertion. For example, there are no syntactic grammar contexts where both a leading division or division-assignment, and a leading *RegularExpressionLiteral* are permitted. This is not affected by semicolon insertion (see 11.9); in examples such as the following:

```
a = b
/hi/g.exec(c).map(d);
```

where the first non-whitespace, non-comment code point after a *LineTerminator* is U+002F (SOLIDUS) and the syntactic context allows division or division-assignment, no semicolon is inserted at the *LineTerminator*. That is, the above example is interpreted in the same way as:

```
a = b / hi / g.exec(c).map(d);
```

Syntax

InputElementDiv **::**
WhiteSpace

LineTerminator
Comment
CommonToken
DivPunctuator
RightBracePunctuator

InputElementRegExp **::**
WhiteSpace
LineTerminator
Comment
CommonToken
RightBracePunctuator
RegularExpressionLiteral

InputElementRegExpOrTemplateTail **::**
WhiteSpace
LineTerminator
Comment
CommonToken
RegularExpressionLiteral
TemplateSubstitutionTail

InputElementTemplateTail **::**
WhiteSpace
LineTerminator
Comment
CommonToken
DivPunctuator
TemplateSubstitutionTail

11.1 Unicode Format-Control Characters

The Unicode format-control characters (i.e., the characters in category "Cf" in the Unicode Character Database such as LEFT-TO-RIGHT MARK or RIGHT-TO-LEFT MARK) are control codes used to control the formatting of a range of text in the absence of higher-level protocols for this (such as mark-up languages).

It is useful to allow format-control characters in source text to facilitate editing and display. All format control characters may be used within comments, and within string literals, template literals, and regular expression literals.

U+200C (ZERO WIDTH NON-JOINER) and U+200D (ZERO WIDTH JOINER) are format-control characters that are used to make necessary distinctions when forming words or phrases in certain languages. In ECMAScript source text these code points may also be used in an *IdentifierName* after the first character.

U+FEFF (ZERO WIDTH NO-BREAK SPACE) is a format-control character used primarily at the start of a text to mark it as Unicode and to allow detection of the text's encoding and byte order. <ZWNBSP> characters intended for this purpose can sometimes also appear after the start of a text, for example as a result of concatenating files. In ECMAScript source text <ZWNBSP> code points are treated as white space characters (see 11.2).

The special treatment of certain format-control characters outside of comments, string literals, and regular expression

literals is summarized in Table 31.

Table 31: Format-Control Code Point Usage

Code Point	Name	Abbreviation	Usage
U+200C	ZERO WIDTH NON-JOINER	<ZWNJ>	*IdentifierPart*
U+200D	ZERO WIDTH JOINER	<ZWJ>	*IdentifierPart*
U+FEFF	ZERO WIDTH NO-BREAK SPACE	<ZWNBSP>	*WhiteSpace*

11.2 White Space

White space code points are used to improve source text readability and to separate tokens (indivisible lexical units) from each other, but are otherwise insignificant. White space code points may occur between any two tokens and at the start or end of input. White space code points may occur within a *StringLiteral*, a *RegularExpressionLiteral*, a *Template*, or a *TemplateSubstitutionTail* where they are considered significant code points forming part of a literal value. They may also occur within a *Comment*, but cannot appear within any other kind of token.

The ECMAScript white space code points are listed in Table 32.

Table 32: White Space Code Points

Code Point	Name	Abbreviation
U+0009	CHARACTER TABULATION	<TAB>
U+000B	LINE TABULATION	<VT>
U+000C	FORM FEED (FF)	<FF>
U+0020	SPACE	<SP>
U+00A0	NO-BREAK SPACE	<NBSP>
U+FEFF	ZERO WIDTH NO-BREAK SPACE	<ZWNBSP>
Other category “Zs”	Any other Unicode “Space_Separator” code point	<USP>

ECMAScript implementations must recognize as *WhiteSpace* code points listed in the “Space_Separator” (“Zs”) category.

NOTE Other than for the code points listed in Table 32, ECMAScript *WhiteSpace* intentionally excludes all code points that have the Unicode “White_Space” property but which are not classified in category “Space_Separator” (“Zs”).

Syntax

WhiteSpace **::**
<TAB>

<VT>
<FF>
<SP>
<NBSP>
<ZWNBSP>
<USP>

11.3 Line Terminators

Like white space code points, line terminator code points are used to improve source text readability and to separate tokens (indivisible lexical units) from each other. However, unlike white space code points, line terminators have some influence over the behaviour of the syntactic grammar. In general, line terminators may occur between any two tokens, but there are a few places where they are forbidden by the syntactic grammar. Line terminators also affect the process of automatic semicolon insertion (11.9). A line terminator cannot occur within any token except a *StringLiteral*, *Template*, or *TemplateSubstitutionTail*. <LF> and <CR> line terminators cannot occur within a *StringLiteral* token except as part of a *LineContinuation*.

A line terminator can occur within a *MultiLineComment* but cannot occur within a *SingleLineComment*.

Line terminators are included in the set of white space code points that are matched by the **`\s`** class in regular expressions.

The ECMAScript line terminator code points are listed in Table 33.

Table 33: Line Terminator Code Points

Code Point	Unicode Name	Abbreviation
`U+000A`	LINE FEED (LF)	<LF>
`U+000D`	CARRIAGE RETURN (CR)	<CR>
`U+2028`	LINE SEPARATOR	<LS>
`U+2029`	PARAGRAPH SEPARATOR	<PS>

Only the Unicode code points in Table 33 are treated as line terminators. Other new line or line breaking Unicode code points are not treated as line terminators but are treated as white space if they meet the requirements listed in Table 32. The sequence <CR><LF> is commonly used as a line terminator. It should be considered a single *SourceCharacter* for the purpose of reporting line numbers.

Syntax

LineTerminator **::**
<LF>
<CR>
<LS>
<PS>

LineTerminatorSequence **::**

<LF>
<CR> [lookahead ≠ <LF>]
<LS>
<PS>
<CR> <LF>

11.4 Comments

Comments can be either single or multi-line. Multi-line comments cannot nest.

Because a single-line comment can contain any Unicode code point except a *LineTerminator* code point, and because of the general rule that a token is always as long as possible, a single-line comment always consists of all code points from the **//** marker to the end of the line. However, the *LineTerminator* at the end of the line is not considered to be part of the single-line comment; it is recognized separately by the lexical grammar and becomes part of the stream of input elements for the syntactic grammar. This point is very important, because it implies that the presence or absence of single-line comments does not affect the process of automatic semicolon insertion (see 11.9).

Comments behave like white space and are discarded except that, if a *MultiLineComment* contains a line terminator code point, then the entire comment is considered to be a *LineTerminator* for purposes of parsing by the syntactic grammar.

Syntax

Comment **::**
  MultiLineComment
  SingleLineComment

MultiLineComment **::**
  `/*` *MultiLineCommentChars*$_{opt}$ `*/`

MultiLineCommentChars **::**
  MultiLineNotAsteriskChar *MultiLineCommentChars*$_{opt}$
  `*` *PostAsteriskCommentChars*$_{opt}$

PostAsteriskCommentChars **::**
  MultiLineNotForwardSlashOrAsteriskChar *MultiLineCommentChars*$_{opt}$
  `*` *PostAsteriskCommentChars*$_{opt}$

MultiLineNotAsteriskChar **::**
  SourceCharacter but not `*`

MultiLineNotForwardSlashOrAsteriskChar **::**
  SourceCharacter but not one of `/` or `*`

SingleLineComment **::**
  `//` *SingleLineCommentChars*$_{opt}$

SingleLineCommentChars **::**
  SingleLineCommentChar *SingleLineCommentChars*$_{opt}$

SingleLineCommentChar **::**
SourceCharacter but not *LineTerminator*

11.5 Tokens

Syntax

CommonToken **::**
IdentifierName
Punctuator
NumericLiteral
StringLiteral
Template

NOTE The *DivPunctuator*, *RegularExpressionLiteral*, *RightBracePunctuator*, and *TemplateSubstitutionTail* productions derive additional tokens that are not included in the *CommonToken* production.

11.6 Names and Keywords

IdentifierName and *ReservedWord* are tokens that are interpreted according to the Default Identifier Syntax given in Unicode Standard Annex #31, Identifier and Pattern Syntax, with some small modifications. *ReservedWord* is an enumerated subset of *IdentifierName*. The syntactic grammar defines *Identifier* as an *IdentifierName* that is not a *ReservedWord*. The Unicode identifier grammar is based on character properties specified by the Unicode Standard. The Unicode code points in the specified categories in the latest version of the Unicode standard must be treated as in those categories by all conforming ECMAScript implementations. ECMAScript implementations may recognize identifier code points defined in later editions of the Unicode Standard.

NOTE 1 This standard specifies specific code point additions: U+0024 (DOLLAR SIGN) and U+005F (LOW LINE) are permitted anywhere in an *IdentifierName*, and the code points U+200C (ZERO WIDTH NON-JOINER) and U+200D (ZERO WIDTH JOINER) are permitted anywhere after the first code point of an *IdentifierName*.

Unicode escape sequences are permitted in an *IdentifierName*, where they contribute a single Unicode code point to the *IdentifierName*. The code point is expressed by the *CodePoint* of the *UnicodeEscapeSequence* (see 11.8.4). The **** preceding the *UnicodeEscapeSequence* and the **u** and **{ }** code units, if they appear, do not contribute code points to the *IdentifierName*. A *UnicodeEscapeSequence* cannot be used to put a code point into an *IdentifierName* that would otherwise be illegal. In other words, if a **** *UnicodeEscapeSequence* sequence were replaced by the *SourceCharacter* it contributes, the result must still be a valid *IdentifierName* that has the exact same sequence of *SourceCharacter* elements as the original *IdentifierName*. All interpretations of *IdentifierName* within this specification are based upon their actual code points regardless of whether or not an escape sequence was used to contribute any particular code point.

Two *IdentifierName*s that are canonically equivalent according to the Unicode standard are *not* equal unless, after replacement of each *UnicodeEscapeSequence*, they are represented by the exact same sequence of code points.

Syntax

IdentifierName **::**
IdentifierStart
IdentifierName *IdentifierPart*

IdentifierStart **::**
UnicodeIDStart
$
_
**** *UnicodeEscapeSequence*

IdentifierPart **::**
UnicodeIDContinue
$
**** *UnicodeEscapeSequence*
<ZWNJ>
<ZWJ>

UnicodeIDStart **::**
any Unicode code point with the Unicode property “ID_Start”

UnicodeIDContinue **::**
any Unicode code point with the Unicode property “ID_Continue”

The definitions of the nonterminal *UnicodeEscapeSequence* is given in 11.8.4.

NOTE 2 The nonterminal *IdentifierPart* derives **_** via *UnicodeIDContinue*.

NOTE 3 The sets of code points with Unicode properties “ID_Start” and “ID_Continue” include, respectively, the code points with Unicode properties “Other_ID_Start” and “Other_ID_Continue”.

11.6.1 Identifier Names

11.6.1.1 Static Semantics: Early Errors

IdentifierStart **::** **** *UnicodeEscapeSequence*

- It is a Syntax Error if the SV of *UnicodeEscapeSequence* is none of "$", or "_", or the UTF16Encoding of a code point matched by the *UnicodeIDStart* lexical grammar production.

IdentifierPart **::** **** *UnicodeEscapeSequence*

- It is a Syntax Error if the SV of *UnicodeEscapeSequence* is none of "$", or "_", or the UTF16Encoding of either <ZWNJ> or <ZWJ>, or the UTF16Encoding of a Unicode code point that would be matched by the *UnicodeIDContinue* lexical grammar production.

11.6.1.2 Static Semantics: StringValue

IdentifierName **::**
IdentifierStart

IdentifierName *IdentifierPart*

1. Let *idText* be the source text matched by *IdentifierName*.
2. Let *idTextUnescaped* be the result of replacing any occurrences of **** *UnicodeEscapeSequence* in *idText* with the code point represented by the *UnicodeEscapeSequence*.
3. Return ! UTF16Encode(*idTextUnescaped*).

11.6.2 Keywords and Reserved Words

A *keyword* is a token that matches *IdentifierName*, but also has a syntactic use; that is, it appears literally, in a **`fixed width`** font, in some syntactic production. The keywords of ECMAScript include **`if`**, **`while`**, **`async`**, **`await`**, and many others.

A *reserved word* is an *IdentifierName* that cannot be used as an identifier. Many keywords are reserved words, but some are not, and some are reserved only in certain contexts. **`if`** and **`while`** are reserved words. **`await`** is reserved only inside async functions and modules. **`async`** is not reserved; it can be used as a variable name or statement label without restriction.

This specification uses a combination of grammatical productions and early error rules to specify which names are valid identifiers and which are reserved words. All tokens in the *ReservedWord* list below, except for **`await`** and **`yield`**, are unconditionally reserved. Exceptions for **`await`** and **`yield`** are specified in 12.1, using parameterized syntactic productions. Lastly, several early error rules restrict the set of valid identifiers. See 12.1.1, 13.3.1.1, 13.7.5.1, and 14.6.1. In summary, there are five categories of identifier names:

- Those that are always allowed as identifiers, and are not keywords, such as **`Math`**, **`window`**, **`toString`**, and **`_`**;
- Those that are never allowed as identifiers, namely the *ReservedWord*s listed below except **`await`** and **`yield`**;
- Those that are contextually allowed as identifiers, namely **`await`** and **`yield`**;
- Those that are contextually disallowed as identifiers, in strict mode code: **`let`**, **`static`**, **`implements`**, **`interface`**, **`package`**, **`private`**, **`protected`**, and **`public`**;
- Those that are always allowed as identifiers, but also appear as keywords within certain syntactic productions, at places where *Identifier* is not allowed: **`as`**, **`async`**, **`from`**, **`get`**, **`of`**, **`set`**, and **`target`**.

The term *conditional keyword*, or *contextual keyword*, is sometimes used to refer to the keywords that fall in the last three categories, and thus can be used as identifiers in some contexts and as keywords in others.

Syntax

ReservedWord **::** **one of**

```
await break case catch class const continue debugger default delete do else enum export extends false
    finally for function if import in instanceof new null return super switch this throw true try
    typeof var void while with yield
```

NOTE 1 Per 5.1.5, keywords in the grammar match literal sequences of specific *SourceCharacter* elements. A code point in a keyword cannot be expressed by a **** *UnicodeEscapeSequence*.

An *IdentifierName* can contain **** *UnicodeEscapeSequence*s, but it is not possible to declare a variable named "else" by spelling it **`els\u{65}`**. The early error rules in 12.1.1 rule out identifiers with the same StringValue as a reserved word.

NOTE 2 **`enum`** is not currently used as a keyword in this specification. It is a *future reserved word*, set aside for use as a keyword in future language extensions.

Similarly, **`implements`**, **`interface`**, **`package`**, **`private`**, **`protected`**, and **`public`** are future reserved words in strict mode code.

NOTE 3 The names **`arguments`** and **`eval`** are not keywords, but they are subject to some restrictions in strict mode code. See 12.1.1, 12.1.3, 14.1.2, 14.4.1, 14.5.1, and 14.7.1.

11.7 Punctuators

Syntax

Punctuator **::**
  OptionalChainingPunctuator
  OtherPunctuator

OptionalChainingPunctuator **::**
  `?.` [lookahead ∉ *DecimalDigit*]

OtherPunctuator **::** **one of**
  `{ ( ) [ ] . ... ; , < > <= >= == != === !== + - * % ** ++ -- << >> >>> & | ^ ! ~ && || ?? ? : = += -= *= %= **= <<= >>= >>>= &= |= ^= =>`

DivPunctuator **::**
  `/`
  `/=`

RightBracePunctuator **::**
  `}`

11.8 Literals

11.8.1 Null Literals

Syntax

NullLiteral **::**

`null`

11.8.2 Boolean Literals

Syntax

BooleanLiteral **::**

`true`

`false`

11.8.3 Numeric Literals

Syntax

NumericLiteral **::**

DecimalLiteral

DecimalBigIntegerLiteral

NonDecimalIntegerLiteral

NonDecimalIntegerLiteral *BigIntLiteralSuffix*

DecimalBigIntegerLiteral **::**

`0` *BigIntLiteralSuffix*

NonZeroDigit *DecimalDigits*$_{\text{opt}}$ *BigIntLiteralSuffix*

NonDecimalIntegerLiteral **::**

BinaryIntegerLiteral

OctalIntegerLiteral

HexIntegerLiteral

BigIntLiteralSuffix **::**

`n`

DecimalLiteral **::**

DecimalIntegerLiteral `.` *DecimalDigits*$_{\text{opt}}$ *ExponentPart*$_{\text{opt}}$

`.` *DecimalDigits* *ExponentPart*$_{\text{opt}}$

DecimalIntegerLiteral *ExponentPart*$_{\text{opt}}$

DecimalIntegerLiteral **::**

`0`

NonZeroDigit *DecimalDigits*$_{\text{opt}}$

DecimalDigits **::**

DecimalDigit

DecimalDigits *DecimalDigit*

DecimalDigit **::** **one of**

`0 1 2 3 4 5 6 7 8 9`

NonZeroDigit **::** **one of**

`1 2 3 4 5 6 7 8 9`

ExponentPart **::**
    ExponentIndicator *SignedInteger*

ExponentIndicator **::** **one of**
    `e` `E`

SignedInteger **::**
    DecimalDigits
    `+` *DecimalDigits*
    `-` *DecimalDigits*

BinaryIntegerLiteral **::**
    `0b` *BinaryDigits*
    `0B` *BinaryDigits*

BinaryDigits **::**
    BinaryDigit
    BinaryDigits *BinaryDigit*

BinaryDigit **::** **one of**
    `0` `1`

OctalIntegerLiteral **::**
    `0o` *OctalDigits*
    `0O` *OctalDigits*

OctalDigits **::**
    OctalDigit
    OctalDigits *OctalDigit*

OctalDigit **::** **one of**
    `0` `1` `2` `3` `4` `5` `6` `7`

HexIntegerLiteral **::**
    `0x` *HexDigits*
    `0X` *HexDigits*

HexDigits **::**
    HexDigit
    HexDigits *HexDigit*

HexDigit **::** **one of**
    `0` `1` `2` `3` `4` `5` `6` `7` `8` `9` `a` `b` `c` `d` `e` `f` `A` `B` `C` `D` `E` `F`

The *SourceCharacter* immediately following a *NumericLiteral* must not be an *IdentifierStart* or *DecimalDigit*.

NOTE For example: `3in` is an error and not the two input elements `3` and `in`.

A conforming implementation, when processing strict mode code, must not extend, as described in B.1.1, the syntax of *NumericLiteral* to include *LegacyOctalIntegerLiteral*, nor extend the syntax of *DecimalIntegerLiteral* to include *NonOctalDecimalIntegerLiteral*.

11.8.3.1 Static Semantics: MV

A numeric literal stands for a value of the Number type or the BigInt type.

- The MV of *NumericLiteral* :: *DecimalLiteral* is the MV of *DecimalLiteral*.
- The MV of *NonDecimalIntegerLiteral* :: *BinaryIntegerLiteral* is the MV of *BinaryIntegerLiteral*.
- The MV of *NonDecimalIntegerLiteral* :: *OctalIntegerLiteral* is the MV of *OctalIntegerLiteral*.
- The MV of *NonDecimalIntegerLiteral* :: *HexIntegerLiteral* is the MV of *HexIntegerLiteral*.
- The MV of *DecimalLiteral* :: *DecimalIntegerLiteral* . is the MV of *DecimalIntegerLiteral*.
- The MV of *DecimalLiteral* :: *DecimalIntegerLiteral* . *DecimalDigits* is the MV of *DecimalIntegerLiteral* plus (the MV of *DecimalDigits* × $10_{\mathbb{R}}{}^{-\mathbb{R}n}$), where n is the mathematical value of the number of code points in *DecimalDigits* .
- The MV of *DecimalLiteral* :: *DecimalIntegerLiteral* . *ExponentPart* is the MV of *DecimalIntegerLiteral* × $10_{\mathbb{R}}{}^{e}$, where e is the MV of *ExponentPart*.
- The MV of *DecimalLiteral* :: *DecimalIntegerLiteral* . *DecimalDigits* *ExponentPart* is (the MV of *DecimalIntegerLiteral* plus (the MV of *DecimalDigits* × $10_{\mathbb{R}}{}^{-\mathbb{R}n}$)) × $10_{\mathbb{R}}{}^{e}$, where n is the mathematical integer number of code points in *DecimalDigits* and e is the MV of *ExponentPart*.
- The MV of *DecimalLiteral* :: . *DecimalDigits* is the MV of *DecimalDigits* × $10_{\mathbb{R}}{}^{-\mathbb{R}n}$, where n is the mathematical integer number of code points in *DecimalDigits*.
- The MV of *DecimalLiteral* :: . *DecimalDigits* *ExponentPart* is the MV of *DecimalDigits* × $10_{\mathbb{R}}{}^{e-\mathbb{R}n}$, where n is the mathematical integer number of code points in *DecimalDigits* and e is the MV of *ExponentPart*.
- The MV of *DecimalLiteral* :: *DecimalIntegerLiteral* is the MV of *DecimalIntegerLiteral*.
- The MV of *DecimalLiteral* :: *DecimalIntegerLiteral* *ExponentPart* is the MV of *DecimalIntegerLiteral* × $10_{\mathbb{R}}{}^{e}$, where e is the MV of *ExponentPart*.
- The MV of *DecimalIntegerLiteral* :: **0** is $0_{\mathbb{R}}$.
- The MV of *DecimalIntegerLiteral* :: *NonZeroDigit* is the MV of *NonZeroDigit*.
- The MV of *DecimalIntegerLiteral* :: *NonZeroDigit* *DecimalDigits* is (the MV of *NonZeroDigit* × $10_{\mathbb{R}}{}^{n}$) plus the MV of *DecimalDigits*, where n is the mathematical integer number of code points in *DecimalDigits*.
- The MV of *DecimalDigits* :: *DecimalDigit* is the MV of *DecimalDigit*.
- The MV of *DecimalDigits* :: *DecimalDigits* *DecimalDigit* is (the MV of *DecimalDigits* × $10_{\mathbb{R}}$) plus the MV of *DecimalDigit*.
- The MV of *ExponentPart* :: *ExponentIndicator* *SignedInteger* is the MV of *SignedInteger*.
- The MV of *SignedInteger* :: *DecimalDigits* is the MV of *DecimalDigits*.
- The MV of *SignedInteger* :: **+** *DecimalDigits* is the MV of *DecimalDigits*.
- The MV of *SignedInteger* :: **-** *DecimalDigits* is the negative of the MV of *DecimalDigits*.
- The MV of *DecimalDigit* :: **0** or of *HexDigit* :: **0** or of *OctalDigit* :: **0** or of *BinaryDigit* :: **0** is $0_{\mathbb{R}}$.
- The MV of *DecimalDigit* :: **1** or of *NonZeroDigit* :: **1** or of *HexDigit* :: **1** or of *OctalDigit* :: **1** or of *BinaryDigit* :: **1** is $1_{\mathbb{R}}$.
- The MV of *DecimalDigit* :: **2** or of *NonZeroDigit* :: **2** or of *HexDigit* :: **2** or of *OctalDigit* :: **2** is $2_{\mathbb{R}}$.
- The MV of *DecimalDigit* :: **3** or of *NonZeroDigit* :: **3** or of *HexDigit* :: **3** or of *OctalDigit* :: **3** is $3_{\mathbb{R}}$.
- The MV of *DecimalDigit* :: **4** or of *NonZeroDigit* :: **4** or of *HexDigit* :: **4** or of *OctalDigit* :: **4** is $4_{\mathbb{R}}$.
- The MV of *DecimalDigit* :: **5** or of *NonZeroDigit* :: **5** or of *HexDigit* :: **5** or of *OctalDigit* :: **5** is $5_{\mathbb{R}}$.
- The MV of *DecimalDigit* :: **6** or of *NonZeroDigit* :: **6** or of *HexDigit* :: **6** or of *OctalDigit* :: **6** is $6_{\mathbb{R}}$.
- The MV of *DecimalDigit* :: **7** or of *NonZeroDigit* :: **7** or of *HexDigit* :: **7** or of *OctalDigit* :: **7** is $7_{\mathbb{R}}$.
- The MV of *DecimalDigit* :: **8** or of *NonZeroDigit* :: **8** or of *HexDigit* :: **8** is $8_{\mathbb{R}}$.
- The MV of *DecimalDigit* :: **9** or of *NonZeroDigit* :: **9** or of *HexDigit* :: **9** is $9_{\mathbb{R}}$.

- The MV of *HexDigit* :: **a** or of *HexDigit* :: **A** is $10_{\mathbb{R}}$.
- The MV of *HexDigit* :: **b** or of *HexDigit* :: **B** is $11_{\mathbb{R}}$.
- The MV of *HexDigit* :: **c** or of *HexDigit* :: **C** is $12_{\mathbb{R}}$.
- The MV of *HexDigit* :: **d** or of *HexDigit* :: **D** is $13_{\mathbb{R}}$.
- The MV of *HexDigit* :: **e** or of *HexDigit* :: **E** is $14_{\mathbb{R}}$.
- The MV of *HexDigit* :: **f** or of *HexDigit* :: **F** is $15_{\mathbb{R}}$.
- The MV of *BinaryIntegerLiteral* :: **0b** *BinaryDigits* is the MV of *BinaryDigits*.
- The MV of *BinaryIntegerLiteral* :: **0B** *BinaryDigits* is the MV of *BinaryDigits*.
- The MV of *BinaryDigits* :: *BinaryDigit* is the MV of *BinaryDigit*.
- The MV of *BinaryDigits* :: *BinaryDigits* *BinaryDigit* is (the MV of *BinaryDigits* × $2_{\mathbb{R}}$) plus the MV of *BinaryDigit*.
- The MV of *OctalIntegerLiteral* :: **0o** *OctalDigits* is the MV of *OctalDigits*.
- The MV of *OctalIntegerLiteral* :: **0O** *OctalDigits* is the MV of *OctalDigits*.
- The MV of *OctalDigits* :: *OctalDigit* is the MV of *OctalDigit*.
- The MV of *OctalDigits* :: *OctalDigits* *OctalDigit* is (the MV of *OctalDigits* × $8_{\mathbb{R}}$) plus the MV of *OctalDigit*.
- The MV of *HexIntegerLiteral* :: **0x** *HexDigits* is the MV of *HexDigits*.
- The MV of *HexIntegerLiteral* :: **0X** *HexDigits* is the MV of *HexDigits*.
- The MV of *HexDigits* :: *HexDigit* is the MV of *HexDigit*.
- The MV of *HexDigits* :: *HexDigits* *HexDigit* is (the MV of *HexDigits* × $16_{\mathbb{R}}$) plus the MV of *HexDigit*.
- The MV of *Hex4Digits* :: *HexDigit* *HexDigit* *HexDigit* *HexDigit* is ($0x1000_{\mathbb{R}}$ times the MV of the first *HexDigit*) plus ($0x100_{\mathbb{R}}$ times the MV of the second *HexDigit*) plus ($0x10_{\mathbb{R}}$ times the MV of the third *HexDigit*) plus the MV of the fourth *HexDigit*.

11.8.3.2 Static Semantics: NumericValue

NumericLiteral :: *DecimalLiteral*

1. Return the Number value that results from rounding the MV of *DecimalLiteral* as described below.

NumericLiteral :: *NonDecimalIntegerLiteral*

1. Return the Number value that results from rounding the MV of *NonDecimalIntegerLiteral* as described below.

Once the exact MV for a numeric literal has been determined, it is then rounded to a value of the Number type. If the MV is $0_{\mathbb{R}}$, then the rounded value is **+0**; otherwise, the rounded value must be the Number value for the MV (as specified in 6.1.6.1), unless the literal is a *DecimalLiteral* and the literal has more than 20 significant digits, in which case the Number value may be either the Number value for the MV of a literal produced by replacing each significant digit after the 20th with a **0** digit or the Number value for the MV of a literal produced by replacing each significant digit after the 20th with a **0** digit and then incrementing the literal at the 20th significant digit position. A digit is *significant* if it is not part of an *ExponentPart* and

- it is not **0**; or
- there is a nonzero digit to its left and there is a nonzero digit, not in the *ExponentPart*, to its right.

NumericLiteral :: *NonDecimalIntegerLiteral* *BigIntLiteralSuffix*

1. Return the BigInt value that represents the MV of *NonDecimalIntegerLiteral*.

DecimalBigIntegerLiteral :: **0** *BigIntLiteralSuffix*

1. Return the BigInt value that represents $0_{\mathbb{R}}$.

DecimalBigIntegerLiteral :: *NonZeroDigit* *BigIntLiteralSuffix*

1. Return the BigInt value that represents the MV of *NonZeroDigit*.

DecimalBigIntegerLiteral :: *NonZeroDigit* *DecimalDigits* *BigIntLiteralSuffix*

1. Let n be the mathematical integer number of code points in *DecimalDigits*.
2. Let mv be (the MV of *NonZeroDigit* × ${10_{\mathbb{R}}}^{n}$) plus the MV of *DecimalDigits*.
3. Return the BigInt value that represents mv.

11.8.4 String Literals

NOTE 1 A string literal is zero or more Unicode code points enclosed in single or double quotes. Unicode code points may also be represented by an escape sequence. All code points may appear literally in a string literal except for the closing quote code points, U+005C (REVERSE SOLIDUS), U+000D (CARRIAGE RETURN), and U+000A (LINE FEED). Any code points may appear in the form of an escape sequence. String literals evaluate to ECMAScript String values. When generating these String values Unicode code points are UTF-16 encoded as defined in 10.1.1. Code points belonging to the Basic Multilingual Plane are encoded as a single code unit element of the string. All other code points are encoded as two code unit elements of the string.

Syntax

StringLiteral ::
  " *DoubleStringCharacters*$_{opt}$ "
  ' *SingleStringCharacters*$_{opt}$ '

DoubleStringCharacters ::
  DoubleStringCharacter *DoubleStringCharacters*$_{opt}$

SingleStringCharacters ::
  SingleStringCharacter *SingleStringCharacters*$_{opt}$

DoubleStringCharacter ::
  SourceCharacter but not one of " or \ or *LineTerminator*
  <LS>
  <PS>
  \ *EscapeSequence*
  LineContinuation

SingleStringCharacter ::
  SourceCharacter but not one of ' or \ or *LineTerminator*
  <LS>
  <PS>
  \ *EscapeSequence*
  LineContinuation

LineContinuation ::
    \ *LineTerminatorSequence*

EscapeSequence ::
    CharacterEscapeSequence
    0 [lookahead ∉ *DecimalDigit*]
    HexEscapeSequence
    UnicodeEscapeSequence

A conforming implementation, when processing strict mode code, must not extend the syntax of *EscapeSequence* to include *LegacyOctalEscapeSequence* as described in B.1.2.

CharacterEscapeSequence ::
    SingleEscapeCharacter
    NonEscapeCharacter

SingleEscapeCharacter :: **one of**
    ' " \ b f n r t v

NonEscapeCharacter ::
    SourceCharacter but not one of *EscapeCharacter* or *LineTerminator*

EscapeCharacter ::
    SingleEscapeCharacter
    DecimalDigit
    x
    u

HexEscapeSequence ::
    x *HexDigit* *HexDigit*

UnicodeEscapeSequence ::
    u *Hex4Digits*
    u{ *CodePoint* **}**

Hex4Digits ::
    HexDigit *HexDigit* *HexDigit* *HexDigit*

The definition of the nonterminal *HexDigit* is given in 11.8.3. *SourceCharacter* is defined in 10.1.

NOTE 2 <LF> and <CR> cannot appear in a string literal, except as part of a *LineContinuation* to produce the empty code points sequence. The proper way to include either in the String value of a string literal is to use an escape sequence such as **\n** or **\u000A**.

11.8.4.1 Static Semantics: StringValue

StringLiteral ::
    " *DoubleStringCharacters*$_{opt}$ "
    ' *SingleStringCharacters*$_{opt}$ '

1. Return the String value whose code units are the SV of this *StringLiteral*.

11.8.4.2 Static Semantics: SV

A string literal stands for a value of the String type. The String value (SV) of the literal is described in terms of code unit values contributed by the various parts of the string literal. As part of this process, some Unicode code points within the string literal are interpreted as having a mathematical value (MV), as described below or in 11.8.3.

- The SV of *StringLiteral* :: `" "` is the empty code unit sequence.
- The SV of *StringLiteral* :: `' '` is the empty code unit sequence.
- The SV of *StringLiteral* :: `"` *DoubleStringCharacters* `"` is the SV of *DoubleStringCharacters*.
- The SV of *StringLiteral* :: `'` *SingleStringCharacters* `'` is the SV of *SingleStringCharacters*.
- The SV of *DoubleStringCharacters* :: *DoubleStringCharacter* is a sequence of up to two code units that is the SV of *DoubleStringCharacter*.
- The SV of *DoubleStringCharacters* :: *DoubleStringCharacter* *DoubleStringCharacters* is a sequence of up to two code units that is the SV of *DoubleStringCharacter* followed by the code units of the SV of *DoubleStringCharacters* in order.
- The SV of *SingleStringCharacters* :: *SingleStringCharacter* is a sequence of up to two code units that is the SV of *SingleStringCharacter*.
- The SV of *SingleStringCharacters* :: *SingleStringCharacter* *SingleStringCharacters* is a sequence of up to two code units that is the SV of *SingleStringCharacter* followed by the code units of the SV of *SingleStringCharacters* in order.
- The SV of *DoubleStringCharacter* :: *SourceCharacter* but not one of `"` or `\` or *LineTerminator* is the UTF16Encoding of the code point value of *SourceCharacter*.
- The SV of *DoubleStringCharacter* :: `<LS>` is the code unit 0x2028 (LINE SEPARATOR).
- The SV of *DoubleStringCharacter* :: `<PS>` is the code unit 0x2029 (PARAGRAPH SEPARATOR).
- The SV of *DoubleStringCharacter* :: `\` *EscapeSequence* is the SV of *EscapeSequence*.
- The SV of *DoubleStringCharacter* :: *LineContinuation* is the empty code unit sequence.
- The SV of *SingleStringCharacter* :: *SourceCharacter* but not one of `'` or `\` or *LineTerminator* is the UTF16Encoding of the code point value of *SourceCharacter*.
- The SV of *SingleStringCharacter* :: `<LS>` is the code unit 0x2028 (LINE SEPARATOR).
- The SV of *SingleStringCharacter* :: `<PS>` is the code unit 0x2029 (PARAGRAPH SEPARATOR).
- The SV of *SingleStringCharacter* :: `\` *EscapeSequence* is the SV of *EscapeSequence*.
- The SV of *SingleStringCharacter* :: *LineContinuation* is the empty code unit sequence.
- The SV of *EscapeSequence* :: *CharacterEscapeSequence* is the SV of *CharacterEscapeSequence*.
- The SV of *EscapeSequence* :: `0` is the code unit 0x0000 (NULL).
- The SV of *EscapeSequence* :: *HexEscapeSequence* is the SV of *HexEscapeSequence*.
- The SV of *EscapeSequence* :: *UnicodeEscapeSequence* is the SV of *UnicodeEscapeSequence*.
- The SV of *CharacterEscapeSequence* :: *SingleEscapeCharacter* is the code unit whose value is determined by the *SingleEscapeCharacter* according to Table 34.

Table 34: String Single Character Escape Sequences

Escape Sequence	Code Unit Value	Unicode Character Name	Symbol
`\b`	`0x0008`	BACKSPACE	<BS>
`\t`	`0x0009`	CHARACTER TABULATION	<HT>
`\n`	`0x000A`	LINE FEED (LF)	<LF>
`\v`	`0x000B`	LINE TABULATION	<VT>
`\f`	`0x000C`	FORM FEED (FF)	<FF>
`\r`	`0x000D`	CARRIAGE RETURN (CR)	<CR>
`\"`	`0x0022`	QUOTATION MARK	`"`
`\'`	`0x0027`	APOSTROPHE	`'`
`\\`	`0x005C`	REVERSE SOLIDUS	`\`

- The SV of *CharacterEscapeSequence* :: *NonEscapeCharacter* is the SV of *NonEscapeCharacter*.
- The SV of *NonEscapeCharacter* :: *SourceCharacter* but not one of *EscapeCharacter* or *LineTerminator* is the UTF16Encoding of the code point value of *SourceCharacter*.
- The SV of *HexEscapeSequence* :: `x` *HexDigit* *HexDigit* is the code unit whose value is ($16_{\mathbb{R}}$ times the MV of the first *HexDigit*) plus the MV of the second *HexDigit*.
- The SV of *UnicodeEscapeSequence* :: `u` *Hex4Digits* is the SV of *Hex4Digits*.
- The SV of *Hex4Digits* :: *HexDigit* *HexDigit* *HexDigit* *HexDigit* is the code unit whose value is the MV of *Hex4Digits*.
- The SV of *UnicodeEscapeSequence* :: `u{` *CodePoint* `}` is the UTF16Encoding of the MV of *CodePoint*.

11.8.5 Regular Expression Literals

NOTE 1 A regular expression literal is an input element that is converted to a RegExp object (see 21.2) each time the literal is evaluated. Two regular expression literals in a program evaluate to regular expression objects that never compare as `===` to each other even if the two literals' contents are identical. A RegExp object may also be created at runtime by **`new RegExp`** or calling the **`RegExp`** constructor as a function (see 21.2.3).

The productions below describe the syntax for a regular expression literal and are used by the input element scanner to find the end of the regular expression literal. The source text comprising the *RegularExpressionBody* and the *RegularExpressionFlags* are subsequently parsed again using the more stringent ECMAScript Regular Expression grammar (21.2.1).

An implementation may extend the ECMAScript Regular Expression grammar defined in 21.2.1, but it must not extend the *RegularExpressionBody* and *RegularExpressionFlags* productions defined below or the productions used by these productions.

Syntax

RegularExpressionLiteral ::
`/` *RegularExpressionBody* `/` *RegularExpressionFlags*

RegularExpressionBody ::
RegularExpressionFirstChar *RegularExpressionChars*

RegularExpressionChars ::
[empty]
RegularExpressionChars *RegularExpressionChar*

RegularExpressionFirstChar ::
RegularExpressionNonTerminator but not one of `*` or `\` or `/` or `[`
RegularExpressionBackslashSequence
RegularExpressionClass

RegularExpressionChar ::
RegularExpressionNonTerminator but not one of `\` or `/` or `[`
RegularExpressionBackslashSequence
RegularExpressionClass

RegularExpressionBackslashSequence ::
`\` *RegularExpressionNonTerminator*

RegularExpressionNonTerminator ::
SourceCharacter but not *LineTerminator*

RegularExpressionClass ::
`[` *RegularExpressionClassChars* `]`

RegularExpressionClassChars ::
[empty]
RegularExpressionClassChars *RegularExpressionClassChar*

RegularExpressionClassChar ::
RegularExpressionNonTerminator but not one of `]` or `\`
RegularExpressionBackslashSequence

RegularExpressionFlags ::
[empty]
RegularExpressionFlags *IdentifierPart*

NOTE 2 Regular expression literals may not be empty; instead of representing an empty regular expression literal, the code unit sequence `//` starts a single-line comment. To specify an empty regular expression, use: `/(?:)/`.

11.8.5.1 Static Semantics: Early Errors

RegularExpressionFlags :: *RegularExpressionFlags* *IdentifierPart*

- It is a Syntax Error if *IdentifierPart* contains a Unicode escape sequence.

11.8.5.2 Static Semantics: BodyText

RegularExpressionLiteral :: / *RegularExpressionBody* / *RegularExpressionFlags*

1. Return the source text that was recognized as *RegularExpressionBody*.

11.8.5.3 Static Semantics: FlagText

RegularExpressionLiteral :: / *RegularExpressionBody* / *RegularExpressionFlags*

1. Return the source text that was recognized as *RegularExpressionFlags*.

11.8.6 Template Literal Lexical Components

Syntax

Template ::
  NoSubstitutionTemplate
  TemplateHead

NoSubstitutionTemplate ::
  ` *TemplateCharacters*$_{opt}$ `

TemplateHead ::
  ` *TemplateCharacters*$_{opt}$ ${

TemplateSubstitutionTail ::
  TemplateMiddle
  TemplateTail

TemplateMiddle ::
  } *TemplateCharacters*$_{opt}$ ${

TemplateTail ::
  } *TemplateCharacters*$_{opt}$ `

TemplateCharacters ::
  TemplateCharacter *TemplateCharacters*$_{opt}$

TemplateCharacter ::
  $ [lookahead ≠ {]
  \ *EscapeSequence*
  \ *NotEscapeSequence*
  LineContinuation
  LineTerminatorSequence
  SourceCharacter but not one of ` or \ or $ or *LineTerminator*

NotEscapeSequence ::
  0 *DecimalDigit*
  DecimalDigit but not 0
  x [lookahead ∉ *HexDigit*]
  x *HexDigit* [lookahead ∉ *HexDigit*]
  u [lookahead ∉ *HexDigit*] [lookahead ≠ {]

`u` *HexDigit* [lookahead ∉ *HexDigit*]
`u` *HexDigit* *HexDigit* [lookahead ∉ *HexDigit*]
`u` *HexDigit* *HexDigit* *HexDigit* [lookahead ∉ *HexDigit*]
`u` `{` [lookahead ∉ *HexDigit*]
`u` `{` *NotCodePoint* [lookahead ∉ *HexDigit*]
`u` `{` *CodePoint* [lookahead ∉ *HexDigit*] [lookahead ≠ `}`]

NotCodePoint ::
HexDigits but only if MV of *HexDigits* > 0x10FFFF

CodePoint ::
HexDigits but only if MV of *HexDigits* ≤ 0x10FFFF

A conforming implementation must not use the extended definition of *EscapeSequence* described in B.1.2 when parsing a *TemplateCharacter*.

NOTE *TemplateSubstitutionTail* is used by the *InputElementTemplateTail* alternative lexical goal.

11.8.6.1 Static Semantics: TV and TRV

A template literal component is interpreted as a sequence of Unicode code points. The Template Value (TV) of a literal component is described in terms of code unit values (SV, 11.8.4) contributed by the various parts of the template literal component. As part of this process, some Unicode code points within the template component are interpreted as having a mathematical value (MV, 11.8.3). In determining a TV, escape sequences are replaced by the UTF-16 code unit(s) of the Unicode code point represented by the escape sequence. The Template Raw Value (TRV) is similar to a Template Value with the difference that in TRVs escape sequences are interpreted literally.

- The TV and TRV of *NoSubstitutionTemplate* :: `` ` ` `` is the empty code unit sequence.
- The TV and TRV of *TemplateHead* :: `` ` `${` is the empty code unit sequence.
- The TV and TRV of *TemplateMiddle* :: `}` `${` is the empty code unit sequence.
- The TV and TRV of *TemplateTail* :: `}` `` ` `` is the empty code unit sequence.
- The TV of *NoSubstitutionTemplate* :: `` ` *TemplateCharacters* ` `` is the TV of *TemplateCharacters*.
- The TV of *TemplateHead* :: `` ` *TemplateCharacters* `${` `` is the TV of *TemplateCharacters*.
- The TV of *TemplateMiddle* :: `}` *TemplateCharacters* `${` is the TV of *TemplateCharacters*.
- The TV of *TemplateTail* :: `}` *TemplateCharacters* `` ` `` is the TV of *TemplateCharacters*.
- The TV of *TemplateCharacters* :: *TemplateCharacter* is the TV of *TemplateCharacter*.
- The TV of *TemplateCharacters* :: *TemplateCharacter* *TemplateCharacters* is **undefined** if either the TV of *TemplateCharacter* is **undefined** or the TV of *TemplateCharacters* is **undefined**. Otherwise, it is a sequence consisting of the code units of the TV of *TemplateCharacter* followed by the code units of the TV of *TemplateCharacters*.
- The TV of *TemplateCharacter* :: *SourceCharacter* but not one of `` ` `` or `\` or `$` or *LineTerminator* is the UTF16Encoding of the code point value of *SourceCharacter*.
- The TV of *TemplateCharacter* :: `$` is the code unit 0x0024 (DOLLAR SIGN).
- The TV of *TemplateCharacter* :: `\` *EscapeSequence* is the SV of *EscapeSequence*.
- The TV of *TemplateCharacter* :: `\` *NotEscapeSequence* is **undefined**.
- The TV of *TemplateCharacter* :: *LineContinuation* is the TV of *LineContinuation*.
- The TV of *TemplateCharacter* :: *LineTerminatorSequence* is the TRV of *LineTerminatorSequence*.
- The TV of *LineContinuation* :: `\` *LineTerminatorSequence* is the empty code unit sequence.

- The TRV of *NoSubstitutionTemplate* :: ` *TemplateCharacters* ` is the TRV of *TemplateCharacters*.
- The TRV of *TemplateHead* :: ` *TemplateCharacters* `${` is the TRV of *TemplateCharacters*.
- The TRV of *TemplateMiddle* :: `}` *TemplateCharacters* `${` is the TRV of *TemplateCharacters*.
- The TRV of *TemplateTail* :: `}` *TemplateCharacters* ` is the TRV of *TemplateCharacters*.
- The TRV of *TemplateCharacters* :: *TemplateCharacter* is the TRV of *TemplateCharacter*.
- The TRV of *TemplateCharacters* :: *TemplateCharacter* *TemplateCharacters* is a sequence consisting of the code units of the TRV of *TemplateCharacter* followed by the code units of the TRV of *TemplateCharacters*.
- The TRV of *TemplateCharacter* :: *SourceCharacter* but not one of ` or \ or $ or *LineTerminator* is the UTF16Encoding of the code point value of *SourceCharacter*.
- The TRV of *TemplateCharacter* :: $ is the code unit 0x0024 (DOLLAR SIGN).
- The TRV of *TemplateCharacter* :: \ *EscapeSequence* is the sequence consisting of the code unit 0x005C (REVERSE SOLIDUS) followed by the code units of TRV of *EscapeSequence*.
- The TRV of *TemplateCharacter* :: \ *NotEscapeSequence* is the sequence consisting of the code unit 0x005C (REVERSE SOLIDUS) followed by the code units of TRV of *NotEscapeSequence*.
- The TRV of *TemplateCharacter* :: *LineContinuation* is the TRV of *LineContinuation*.
- The TRV of *TemplateCharacter* :: *LineTerminatorSequence* is the TRV of *LineTerminatorSequence*.
- The TRV of *EscapeSequence* :: *CharacterEscapeSequence* is the TRV of *CharacterEscapeSequence*.
- The TRV of *EscapeSequence* :: 0 is the code unit 0x0030 (DIGIT ZERO).
- The TRV of *EscapeSequence* :: *HexEscapeSequence* is the TRV of *HexEscapeSequence*.
- The TRV of *EscapeSequence* :: *UnicodeEscapeSequence* is the TRV of *UnicodeEscapeSequence*.
- The TRV of *NotEscapeSequence* :: 0 *DecimalDigit* is the sequence consisting of the code unit 0x0030 (DIGIT ZERO) followed by the code units of the TRV of *DecimalDigit*.
- The TRV of *NotEscapeSequence* :: x [lookahead ∉ *HexDigit*] is the code unit 0x0078 (LATIN SMALL LETTER X).
- The TRV of *NotEscapeSequence* :: x *HexDigit* [lookahead ∉ *HexDigit*] is the sequence consisting of the code unit 0x0078 (LATIN SMALL LETTER X) followed by the code units of the TRV of *HexDigit*.
- The TRV of *NotEscapeSequence* :: u [lookahead ∉ *HexDigit*] [lookahead ≠ {] is the code unit 0x0075 (LATIN SMALL LETTER U).
- The TRV of *NotEscapeSequence* :: u *HexDigit* [lookahead ∉ *HexDigit*] is the sequence consisting of the code unit 0x0075 (LATIN SMALL LETTER U) followed by the code units of the TRV of *HexDigit*.
- The TRV of *NotEscapeSequence* :: u *HexDigit* *HexDigit* [lookahead ∉ *HexDigit*] is the sequence consisting of the code unit 0x0075 (LATIN SMALL LETTER U) followed by the code units of the TRV of the first *HexDigit* followed by the code units of the TRV of the second *HexDigit*.
- The TRV of *NotEscapeSequence* :: u *HexDigit* *HexDigit* *HexDigit* [lookahead ∉ *HexDigit*] is the sequence consisting of the code unit 0x0075 (LATIN SMALL LETTER U) followed by the code units of the TRV of the first *HexDigit* followed by the code units of the TRV of the second *HexDigit* followed by the code units of the TRV of the third *HexDigit*.
- The TRV of *NotEscapeSequence* :: u { [lookahead ∉ *HexDigit*] is the sequence consisting of the code unit 0x0075 (LATIN SMALL LETTER U) followed by the code unit 0x007B (LEFT CURLY BRACKET).
- The TRV of *NotEscapeSequence* :: u { *NotCodePoint* [lookahead ∉ *HexDigit*] is the sequence consisting of the code unit 0x0075 (LATIN SMALL LETTER U) followed by the code unit 0x007B (LEFT CURLY BRACKET) followed by the code units of the TRV of *NotCodePoint*.
- The TRV of *NotEscapeSequence* :: u { *CodePoint* [lookahead ∉ *HexDigit*] [lookahead ≠ }] is the sequence consisting of the code unit 0x0075 (LATIN SMALL LETTER U) followed by the code unit 0x007B (LEFT CURLY BRACKET) followed by the code units of the TRV of *CodePoint*.
- The TRV of *DecimalDigit* :: **one of** 0 1 2 3 4 5 6 7 8 9 is the UTF16Encoding of the single code point matched by this production.
- The TRV of *CharacterEscapeSequence* :: *SingleEscapeCharacter* is the TRV of *SingleEscapeCharacter*.

- The TRV of *CharacterEscapeSequence* **::** *NonEscapeCharacter* is the SV of *NonEscapeCharacter*.
- The TRV of *SingleEscapeCharacter* **::** **one of** `' " \ b f n r t v` is the UTF16Encoding of the single code point matched by this production.
- The TRV of *HexEscapeSequence* **::** `x` *HexDigit* *HexDigit* is the sequence consisting of the code unit 0x0078 (LATIN SMALL LETTER X) followed by TRV of the first *HexDigit* followed by the TRV of the second *HexDigit*.
- The TRV of *UnicodeEscapeSequence* **::** `u` *Hex4Digits* is the sequence consisting of the code unit 0x0075 (LATIN SMALL LETTER U) followed by TRV of *Hex4Digits*.
- The TRV of *UnicodeEscapeSequence* **::** `u{` *CodePoint* `}` is the sequence consisting of the code unit 0x0075 (LATIN SMALL LETTER U) followed by the code unit 0x007B (LEFT CURLY BRACKET) followed by TRV of *CodePoint* followed by the code unit 0x007D (RIGHT CURLY BRACKET).
- The TRV of *Hex4Digits* **::** *HexDigit* *HexDigit* *HexDigit* *HexDigit* is the sequence consisting of the TRV of the first *HexDigit* followed by the TRV of the second *HexDigit* followed by the TRV of the third *HexDigit* followed by the TRV of the fourth *HexDigit*.
- The TRV of *HexDigits* **::** *HexDigit* is the TRV of *HexDigit*.
- The TRV of *HexDigits* **::** *HexDigits* *HexDigit* is the sequence consisting of TRV of *HexDigits* followed by TRV of *HexDigit*.
- The TRV of *HexDigit* **::** **one of** `0 1 2 3 4 5 6 7 8 9 a b c d e f A B C D E F` is the UTF16Encoding of the single code point matched by this production.
- The TRV of *LineContinuation* **::** `\` *LineTerminatorSequence* is the sequence consisting of the code unit 0x005C (REVERSE SOLIDUS) followed by the code units of TRV of *LineTerminatorSequence*.
- The TRV of *LineTerminatorSequence* **::** <LF> is the code unit 0x000A (LINE FEED).
- The TRV of *LineTerminatorSequence* **::** <CR> is the code unit 0x000A (LINE FEED).
- The TRV of *LineTerminatorSequence* **::** <LS> is the code unit 0x2028 (LINE SEPARATOR).
- The TRV of *LineTerminatorSequence* **::** <PS> is the code unit 0x2029 (PARAGRAPH SEPARATOR).
- The TRV of *LineTerminatorSequence* **::** <CR> <LF> is the sequence consisting of the code unit 0x000A (LINE FEED).

NOTE TV excludes the code units of *LineContinuation* while TRV includes them. <CR><LF> and <CR> *LineTerminatorSequence*s are normalized to <LF> for both TV and TRV. An explicit *EscapeSequence* is needed to include a <CR> or <CR><LF> sequence.

11.9 Automatic Semicolon Insertion

Most ECMAScript statements and declarations must be terminated with a semicolon. Such semicolons may always appear explicitly in the source text. For convenience, however, such semicolons may be omitted from the source text in certain situations. These situations are described by saying that semicolons are automatically inserted into the source code token stream in those situations.

11.9.1 Rules of Automatic Semicolon Insertion

In the following rules, "token" means the actual recognized lexical token determined using the current lexical goal symbol as described in clause 11.

There are three basic rules of semicolon insertion:

1. When, as the source text is parsed from left to right, a token (called the *offending token*) is encountered that is not allowed by any production of the grammar, then a semicolon is automatically inserted before the offending

token if one or more of the following conditions is true:

- The offending token is separated from the previous token by at least one *LineTerminator*.
- The offending token is **}**.
- The previous token is **)** and the inserted semicolon would then be parsed as the terminating semicolon of a do-while statement (13.7.2).

2. When, as the source text is parsed from left to right, the end of the input stream of tokens is encountered and the parser is unable to parse the input token stream as a single instance of the goal nonterminal, then a semicolon is automatically inserted at the end of the input stream.
3. When, as the source text is parsed from left to right, a token is encountered that is allowed by some production of the grammar, but the production is a *restricted production* and the token would be the first token for a terminal or nonterminal immediately following the annotation "[no *LineTerminator* here]" within the restricted production (and therefore such a token is called a restricted token), and the restricted token is separated from the previous token by at least one *LineTerminator*, then a semicolon is automatically inserted before the restricted token.

However, there is an additional overriding condition on the preceding rules: a semicolon is never inserted automatically if the semicolon would then be parsed as an empty statement or if that semicolon would become one of the two semicolons in the header of a **for** statement (see 13.7.4).

NOTE The following are the only restricted productions in the grammar:

UpdateExpression[Yield, Await] :
  LeftHandSideExpression[?Yield, ?Await] [no *LineTerminator* here] **++**
  LeftHandSideExpression[?Yield, ?Await] [no *LineTerminator* here] **--**
ContinueStatement[Yield, Await] :
  continue ;
  continue [no *LineTerminator* here] *LabelIdentifier*[?Yield, ?Await] **;**
BreakStatement[Yield, Await] :
  break ;
  break [no *LineTerminator* here] *LabelIdentifier*[?Yield, ?Await] **;**
ReturnStatement[Yield, Await] :
  return ;
  return [no *LineTerminator* here] *Expression*[+In, ?Yield, ?Await] **;**
ThrowStatement[Yield, Await] :
  throw [no *LineTerminator* here] *Expression*[+In, ?Yield, ?Await] **;**
ArrowFunction[In, Yield, Await] :
  ArrowParameters[?Yield, ?Await] [no *LineTerminator* here] **=>** *ConciseBody*[?In]
YieldExpression[In, Await] :
  yield
  yield [no *LineTerminator* here] *AssignmentExpression*[?In, +Yield, ?Await]
  yield [no *LineTerminator* here] ***** *AssignmentExpression*[?In, +Yield, ?Await]

The practical effect of these restricted productions is as follows:

- When a **++** or **--** token is encountered where the parser would treat it as a postfix operator, and at least one *LineTerminator* occurred between the preceding token and the **++** or **--** token, then a semicolon is automatically inserted before the **++** or **--** token.
- When a **continue**, **break**, **return**, **throw**, or **yield** token is encountered and a *LineTerminator* is encountered before the next token, a semicolon is automatically inserted after the **continue**, **break**, **return**, **throw**, or **yield** token.

The resulting practical advice to ECMAScript programmers is:

- A postfix **++** or **--** operator should appear on the same line as its operand.
- An *Expression* in a **return** or **throw** statement or an *AssignmentExpression* in a **yield** expression should start on the same line as the **return**, **throw**, or **yield** token.
- A *LabelIdentifier* in a **break** or **continue** statement should be on the same line as the **break** or **continue** token.

11.9.2 Examples of Automatic Semicolon Insertion

This section is non-normative.

The source

```
{ 1 2 } 3
```

is not a valid sentence in the ECMAScript grammar, even with the automatic semicolon insertion rules. In contrast, the source

```
{ 1
2 } 3
```

is also not a valid ECMAScript sentence, but is transformed by automatic semicolon insertion into the following:

```
{ 1
;2 ;} 3;
```

which is a valid ECMAScript sentence.

The source

```
for (a; b
)
```

is not a valid ECMAScript sentence and is not altered by automatic semicolon insertion because the semicolon is needed for the header of a **`for`** statement. Automatic semicolon insertion never inserts one of the two semicolons in the header of a **`for`** statement.

The source

```
return
a + b
```

is transformed by automatic semicolon insertion into the following:

```
return;
a + b;
```

> NOTE 1 The expression **`a + b`** is not treated as a value to be returned by the **`return`** statement, because a *LineTerminator* separates it from the token **`return`**.

The source

```
a = b
++c
```

is transformed by automatic semicolon insertion into the following:

```
a = b;
++c;
```

> NOTE 2 The token **`++`** is not treated as a postfix operator applying to the variable **`b`**, because a *LineTerminator* occurs between **`b`** and **`++`**.

The source

```
if (a > b)
else c = d
```

is not a valid ECMAScript sentence and is not altered by automatic semicolon insertion before the **`else`** token, even though no production of the grammar applies at that point, because an automatically inserted semicolon would then be parsed as an empty statement.

The source

```
a = b + c
(d + e).print()
```

is *not* transformed by automatic semicolon insertion, because the parenthesized expression that begins the second line can be interpreted as an argument list for a function call:

```
a = b + c(d + e).print()
```

In the circumstance that an assignment statement must begin with a left parenthesis, it is a good idea for the programmer to provide an explicit semicolon at the end of the preceding statement rather than to rely on automatic semicolon insertion.

11.10 Interesting Cases of Automatic Semicolon Insertion

This section is non-normative.

ECMAScript programs can be written in a style with very few semicolons by relying on automatic semicolon insertion. As described above, semicolons are not inserted at every newline, and automatic semicolon insertion can depend on multiple tokens across line terminators.

As new syntactic features are added to ECMAScript, additional grammar productions could be added that cause lines relying on automatic semicolon insertion preceding them to change grammar productions when parsed.

For the purposes of this section, a case of automatic semicolon insertion is considered interesting if it is a place where a semicolon may or may not be inserted, depending on the source text which precedes it. The rest of this section describes a number of interesting cases of automatic semicolon insertion in this version of ECMAScript.

11.10.1 Interesting Cases of Automatic Semicolon Insertion in Statement Lists

In a *StatementList*, many *StatementListItem*s end in semicolons, which may be omitted using automatic semicolon insertion. As a consequence of the rules above, at the end of a line ending an expression, a semicolon is required if the following line begins with any of the following:

- **An opening parenthesis (`(`)**. Without a semicolon, the two lines together are treated as a *CallExpression*.
- **An opening square bracket (`[`)**. Without a semicolon, the two lines together are treated as property access, rather than an *ArrayLiteral* or *ArrayAssignmentPattern*.
- **A template literal (`` ` ``)**. Without a semicolon, the two lines together are interpreted as a tagged Template (12.3.11), with the previous expression as the *MemberExpression*.
- **Unary `+` or `-`**. Without a semicolon, the two lines together are interpreted as a usage of the corresponding binary operator.
- **A RegExp literal**. Without a semicolon, the two lines together may be parsed instead as the **`/`** *MultiplicativeOperator*, for example if the RegExp has flags.

11.11 Cases of Automatic Semicolon Insertion and "[no *LineTerminator* here]"

This section is non-normative.

ECMAScript contains grammar productions which include "[no *LineTerminator* here]". These productions are sometimes a means to have optional operands in the grammar. Introducing a *LineTerminator* in these locations would change the grammar production of a source text by using the grammar production without the optional operand.

The rest of this section describes a number of productions using "[no *LineTerminator* here]" in this version of ECMAScript.

11.11.1 List of Grammar Productions with Optional Operands and "[no *LineTerminator* here]"

- *UpdateExpression*.
- *ContinueStatement*.
- *BreakStatement*.
- *ReturnStatement*.
- *YieldExpression*.
- Async Function Definitions (14.7) with relation to Function Definitions (14.1)

12 ECMAScript Language: Expressions

12.1 Identifiers

Syntax

IdentifierReference`[Yield, Await]` :
    Identifier
    [~Yield] **yield**
    [~Await] **await**

BindingIdentifier`[Yield, Await]` :
    Identifier
    yield
    await

LabelIdentifier`[Yield, Await]` :
    Identifier
    [~Yield] **yield**
    [~Await] **await**

Identifier :
    IdentifierName but not *ReservedWord*

NOTE **`yield`** and **`await`** are permitted as *BindingIdentifier* in the grammar, and prohibited with static semantics below, to prohibit automatic semicolon insertion in cases such as

```
let
await 0;
```

12.1.1 Static Semantics: Early Errors

BindingIdentifier : *Identifier*

- It is a Syntax Error if the code matched by this production is contained in strict mode code and the StringValue of *Identifier* is **"arguments"** or **"eval"**.

IdentifierReference : **`yield`**
BindingIdentifier : **`yield`**
LabelIdentifier : **`yield`**

- It is a Syntax Error if the code matched by this production is contained in strict mode code.

IdentifierReference : **`await`**
BindingIdentifier : **`await`**
LabelIdentifier : **`await`**

- It is a Syntax Error if the goal symbol of the syntactic grammar is *Module*.

BindingIdentifier$_{[Yield,\ Await]}$: **`yield`**

- It is a Syntax Error if this production has a $_{[Yield]}$ parameter.

BindingIdentifier$_{[Yield,\ Await]}$: **`await`**

- It is a Syntax Error if this production has an $_{[Await]}$ parameter.

IdentifierReference$_{[Yield,\ Await]}$: *Identifier*
BindingIdentifier$_{[Yield,\ Await]}$: *Identifier*
LabelIdentifier$_{[Yield,\ Await]}$: *Identifier*

- It is a Syntax Error if this production has a $_{[Yield]}$ parameter and StringValue of *Identifier* is **"yield"**.
- It is a Syntax Error if this production has an $_{[Await]}$ parameter and StringValue of *Identifier* is **"await"**.

Identifier : *IdentifierName* but not *ReservedWord*

- It is a Syntax Error if this phrase is contained in strict mode code and the StringValue of *IdentifierName* is: **"implements"**, **"interface"**, **"let"**, **"package"**, **"private"**, **"protected"**, **"public"**, **"static"**, or **"yield"**.
- It is a Syntax Error if the goal symbol of the syntactic grammar is *Module* and the StringValue of *IdentifierName* is **"await"**.
- It is a Syntax Error if StringValue of *IdentifierName* is the same String value as the StringValue of any *ReservedWord* except for **`yield`** or **`await`**.

NOTE StringValue of *IdentifierName* normalizes any Unicode escape sequences in *IdentifierName* hence such escapes cannot be used to write an *Identifier* whose code point sequence is the same as a *ReservedWord*.

12.1.2 Static Semantics: BoundNames

BindingIdentifier : *Identifier*

1. Return a new List containing the StringValue of *Identifier*.

BindingIdentifier : `yield`

1. Return a new List containing **"yield"**.

BindingIdentifier : `await`

1. Return a new List containing **"await"**.

12.1.3 Static Semantics: AssignmentTargetType

IdentifierReference : *Identifier*

1. If this *IdentifierReference* is contained in strict mode code and StringValue of *Identifier* is **"eval"** or **"arguments"**, return invalid.
2. Return simple.

IdentifierReference : `yield`

1. Return simple.

IdentifierReference : `await`

1. Return simple.

12.1.4 Static Semantics: StringValue

IdentifierReference : `yield`
BindingIdentifier : `yield`
LabelIdentifier : `yield`

1. Return **"yield"**.

IdentifierReference : `await`
BindingIdentifier : `await`
LabelIdentifier : `await`

1. Return **"await"**.

Identifier : *IdentifierName* but not *ReservedWord*

1. Return the StringValue of *IdentifierName*.

12.1.5 Runtime Semantics: BindingInitialization

With parameters *value* and *environment*.

> NOTE **undefined** is passed for *environment* to indicate that a PutValue operation should be used to assign the initialization value. This is the case for **`var`** statements and formal parameter lists of some non-strict functions (See 9.2.10). In those cases a lexical binding is hoisted and preinitialized prior to evaluation of its initializer.

BindingIdentifier **:** *Identifier*

1. Let *name* be StringValue of *Identifier*.
2. Return ? InitializeBoundName(*name*, *value*, *environment*).

BindingIdentifier **: `yield`**

1. Return ? InitializeBoundName(**"yield"**, *value*, *environment*).

BindingIdentifier **: `await`**

1. Return ? InitializeBoundName(**"await"**, *value*, *environment*).

12.1.5.1 Runtime Semantics: InitializeBoundName (*name*, *value*, *environment*)

1. Assert: Type(*name*) is String.
2. If *environment* is not **undefined**, then
   a. Let *env* be the EnvironmentRecord component of *environment*.
   b. Perform *env*.InitializeBinding(*name*, *value*).
   c. Return NormalCompletion(**undefined**).
3. Else,
   a. Let *lhs* be ResolveBinding(*name*).
   b. Return ? PutValue(*lhs*, *value*).

12.1.6 Runtime Semantics: Evaluation

IdentifierReference **:** *Identifier*

1. Return ? ResolveBinding(StringValue of *Identifier*).

IdentifierReference **: `yield`**

1. Return ? ResolveBinding(**"yield"**).

IdentifierReference **: `await`**

1. Return ? ResolveBinding(**"await"**).

> NOTE 1 The result of evaluating an *IdentifierReference* is always a value of type Reference.

NOTE 2 In non-strict code, the keyword **yield** may be used as an identifier. Evaluating the *IdentifierReference* resolves the binding of **yield** as if it was an *Identifier*. Early Error restriction ensures that such an evaluation only can occur for non-strict code.

12.2 Primary Expression

Syntax

PrimaryExpression[Yield, Await] :
- **this**
- *IdentifierReference*[?Yield, ?Await]
- *Literal*
- *ArrayLiteral*[?Yield, ?Await]
- *ObjectLiteral*[?Yield, ?Await]
- *FunctionExpression*
- *ClassExpression*[?Yield, ?Await]
- *GeneratorExpression*
- *AsyncFunctionExpression*
- *AsyncGeneratorExpression*
- *RegularExpressionLiteral*
- *TemplateLiteral*[?Yield, ?Await, ~Tagged]
- *CoverParenthesizedExpressionAndArrowParameterList*[?Yield, ?Await]

CoverParenthesizedExpressionAndArrowParameterList[Yield, Await] :
- (*Expression*[+In, ?Yield, ?Await])
- (*Expression*[+In, ?Yield, ?Await] ,)
- ( )
- (... *BindingIdentifier*[?Yield, ?Await])
- (... *BindingPattern*[?Yield, ?Await])
- (*Expression*[+In, ?Yield, ?Await] , ... *BindingIdentifier*[?Yield, ?Await])
- (*Expression*[+In, ?Yield, ?Await] , ... *BindingPattern*[?Yield, ?Await])

Supplemental Syntax

When processing an instance of the production
PrimaryExpression[Yield, Await] : *CoverParenthesizedExpressionAndArrowParameterList*[?Yield, ?Await]
the interpretation of *CoverParenthesizedExpressionAndArrowParameterList* is refined using the following grammar:

ParenthesizedExpression[Yield, Await] :
- (*Expression*[+In, ?Yield, ?Await])

12.2.1 Semantics

12.2.1.1 Static Semantics: CoveredParenthesizedExpression

CoverParenthesizedExpressionAndArrowParameterList **:** **(** *Expression* **)**

1. Return the *ParenthesizedExpression* that is covered by *CoverParenthesizedExpressionAndArrowParameterList*.

12.2.1.2 Static Semantics: HasName

PrimaryExpression **:** *CoverParenthesizedExpressionAndArrowParameterList*

1. Let *expr* be CoveredParenthesizedExpression of *CoverParenthesizedExpressionAndArrowParameterList*.
2. If IsFunctionDefinition of *expr* is **false**, return **false**.
3. Return HasName of *expr*.

12.2.1.3 Static Semantics: IsFunctionDefinition

PrimaryExpression **:**

> **this**
> *IdentifierReference*
> *Literal*
> *ArrayLiteral*
> *ObjectLiteral*
> *RegularExpressionLiteral*
> *TemplateLiteral*

1. Return **false**.

PrimaryExpression **:** *CoverParenthesizedExpressionAndArrowParameterList*

1. Let *expr* be CoveredParenthesizedExpression of *CoverParenthesizedExpressionAndArrowParameterList*.
2. Return IsFunctionDefinition of *expr*.

12.2.1.4 Static Semantics: IsIdentifierRef

PrimaryExpression **:** *IdentifierReference*

1. Return **true**.

PrimaryExpression **:**

> **this**
> *Literal*
> *ArrayLiteral*
> *ObjectLiteral*
> *FunctionExpression*
> *ClassExpression*
> *GeneratorExpression*
> *AsyncFunctionExpression*
> *AsyncGeneratorExpression*
> *RegularExpressionLiteral*
> *TemplateLiteral*
> *CoverParenthesizedExpressionAndArrowParameterList*

1. Return **false**.

12.2.1.5 Static Semantics: AssignmentTargetType

PrimaryExpression **:**

`this`
Literal
ArrayLiteral
ObjectLiteral
FunctionExpression
ClassExpression
GeneratorExpression
AsyncFunctionExpression
AsyncGeneratorExpression
RegularExpressionLiteral
TemplateLiteral

1. Return invalid.

PrimaryExpression **:** *CoverParenthesizedExpressionAndArrowParameterList*

1. Let *expr* be CoveredParenthesizedExpression of *CoverParenthesizedExpressionAndArrowParameterList*.
2. Return AssignmentTargetType of *expr*.

12.2.2 The `this` Keyword

12.2.2.1 Runtime Semantics: Evaluation

PrimaryExpression **:** `this`

1. Return ? ResolveThisBinding().

12.2.3 Identifier Reference

See 12.1 for *IdentifierReference*.

12.2.4 Literals

Syntax

Literal **:**

NullLiteral
BooleanLiteral
NumericLiteral
StringLiteral

12.2.4.1 Runtime Semantics: Evaluation

Literal **:** *NullLiteral*

1. Return **null**.

Literal **:** *BooleanLiteral*

1. If *BooleanLiteral* is the token **`false`**, return **false**.
2. If *BooleanLiteral* is the token **`true`**, return **true**.

Literal **:** *NumericLiteral*

1. Return the NumericValue of *NumericLiteral* as defined in 11.8.3.

Literal **:** *StringLiteral*

1. Return the StringValue of *StringLiteral* as defined in 11.8.4.1.

12.2.5 Array Initializer

NOTE An *ArrayLiteral* is an expression describing the initialization of an Array object, using a list, of zero or more expressions each of which represents an array element, enclosed in square brackets. The elements need not be literals; they are evaluated each time the array initializer is evaluated.

Array elements may be elided at the beginning, middle or end of the element list. Whenever a comma in the element list is not preceded by an *AssignmentExpression* (i.e., a comma at the beginning or after another comma), the missing array element contributes to the length of the Array and increases the index of subsequent elements. Elided array elements are not defined. If an element is elided at the end of an array, that element does not contribute to the length of the Array.

Syntax

ArrayLiteral`[Yield, Await]` **:**
- **[** *Elision*$_{opt}$ **]**
- **[** *ElementList*`[?Yield, ?Await]` **]**
- **[** *ElementList*`[?Yield, ?Await]` **,** *Elision*$_{opt}$ **]**

ElementList`[Yield, Await]` **:**
- *Elision*$_{opt}$ *AssignmentExpression*`[+In, ?Yield, ?Await]`
- *Elision*$_{opt}$ *SpreadElement*`[?Yield, ?Await]`
- *ElementList*`[?Yield, ?Await]` **,** *Elision*$_{opt}$ *AssignmentExpression*`[+In, ?Yield, ?Await]`
- *ElementList*`[?Yield, ?Await]` **,** *Elision*$_{opt}$ *SpreadElement*`[?Yield, ?Await]`

Elision **:**
- **,**
- *Elision* **,**

SpreadElement`[Yield, Await]` **:**
- **...** *AssignmentExpression*`[+In, ?Yield, ?Await]`

12.2.5.1 Runtime Semantics: ArrayAccumulation

With parameters *array* and *nextIndex*.

Elision **:** **,**

1. Let *len* be *nextIndex* + 1.
2. Perform ? Set(*array*, **"length"**, *len*, **true**).
3. NOTE: The above Set throws if *len* exceeds 2^{32}-1.
4. Return *len*.

Elision : *Elision* ,

1. Return the result of performing ArrayAccumulation for *Elision* with arguments *array* and *nextIndex* + 1.

ElementList : *Elision*$_{opt}$ *AssignmentExpression*

1. If *Elision* is present, then
   a. Set *nextIndex* to the result of performing ArrayAccumulation for *Elision* with arguments *array* and *nextIndex*.
   b. ReturnIfAbrupt(*nextIndex*).
2. Let *initResult* be the result of evaluating *AssignmentExpression*.
3. Let *initValue* be ? GetValue(*initResult*).
4. Let *created* be ! CreateDataPropertyOrThrow(*array*, ! ToString(*nextIndex*), *initValue*).
5. Return *nextIndex* + 1.

ElementList : *Elision*$_{opt}$ *SpreadElement*

1. If *Elision* is present, then
   a. Set *nextIndex* to the result of performing ArrayAccumulation for *Elision* with arguments *array* and *nextIndex*.
   b. ReturnIfAbrupt(*nextIndex*).
2. Return the result of performing ArrayAccumulation for *SpreadElement* with arguments *array* and *nextIndex*.

ElementList : *ElementList* , *Elision*$_{opt}$ *AssignmentExpression*

1. Set *nextIndex* to the result of performing ArrayAccumulation for *ElementList* with arguments *array* and *nextIndex*.
2. ReturnIfAbrupt(*nextIndex*).
3. If *Elision* is present, then
   a. Set *nextIndex* to the result of performing ArrayAccumulation for *Elision* with arguments *array* and *nextIndex*.
   b. ReturnIfAbrupt(*nextIndex*).
4. Let *initResult* be the result of evaluating *AssignmentExpression*.
5. Let *initValue* be ? GetValue(*initResult*).
6. Let *created* be ! CreateDataPropertyOrThrow(*array*, ! ToString(*nextIndex*), *initValue*).
7. Return *nextIndex* + 1.

ElementList : *ElementList* , *Elision*$_{opt}$ *SpreadElement*

1. Set *nextIndex* to the result of performing ArrayAccumulation for *ElementList* with arguments *array* and *nextIndex*.
2. ReturnIfAbrupt(*nextIndex*).
3. If *Elision* is present, then
   a. Set *nextIndex* to the result of performing ArrayAccumulation for *Elision* with arguments *array* and *nextIndex*.

b. ReturnIfAbrupt(*nextIndex*).

4. Return the result of performing ArrayAccumulation for *SpreadElement* with arguments *array* and *nextIndex*.

SpreadElement : `...` *AssignmentExpression*

1. Let *spreadRef* be the result of evaluating *AssignmentExpression*.
2. Let *spreadObj* be ? GetValue(*spreadRef*).
3. Let *iteratorRecord* be ? GetIterator(*spreadObj*).
4. Repeat,
   a. Let *next* be ? IteratorStep(*iteratorRecord*).
   b. If *next* is **false**, return *nextIndex*.
   c. Let *nextValue* be ? IteratorValue(*next*).
   d. Perform ! CreateDataPropertyOrThrow(*array*, ! ToString(*nextIndex*), *nextValue*).
   e. Set *nextIndex* to *nextIndex* + 1.

NOTE CreateDataPropertyOrThrow is used to ensure that own properties are defined for the array even if the standard built-in Array prototype object has been modified in a manner that would preclude the creation of new own properties using [[Set]].

12.2.5.2 Runtime Semantics: Evaluation

ArrayLiteral : `[` *Elision*$_{opt}$ `]`

1. Let *array* be ! ArrayCreate(0).
2. If *Elision* is present, then
   a. Let *len* be the result of performing ArrayAccumulation for *Elision* with arguments *array* and 0.
   b. ReturnIfAbrupt(*len*).
3. Return *array*.

ArrayLiteral : `[` *ElementList* `]`

1. Let *array* be ! ArrayCreate(0).
2. Let *len* be the result of performing ArrayAccumulation for *ElementList* with arguments *array* and 0.
3. ReturnIfAbrupt(*len*).
4. Return *array*.

ArrayLiteral : `[` *ElementList* `,` *Elision*$_{opt}$ `]`

1. Let *array* be ! ArrayCreate(0).
2. Let *nextIndex* be the result of performing ArrayAccumulation for *ElementList* with arguments *array* and 0.
3. ReturnIfAbrupt(*nextIndex*).
4. If *Elision* is present, then
   a. Let *len* be the result of performing ArrayAccumulation for *Elision* with arguments *array* and *nextIndex*.
   b. ReturnIfAbrupt(*len*).
5. Return *array*.

12.2.6 Object Initializer

NOTE 1 An object initializer is an expression describing the initialization of an Object, written in a form resembling a literal. It is a list of zero or more pairs of property keys and associated values, enclosed in curly brackets. The values need not be literals; they are evaluated each time the object initializer is evaluated.

Syntax

ObjectLiteral[Yield, Await] :
- { }
- { *PropertyDefinitionList*[?Yield, ?Await] }
- { *PropertyDefinitionList*[?Yield, ?Await] , }

PropertyDefinitionList[Yield, Await] :
- *PropertyDefinition*[?Yield, ?Await]
- *PropertyDefinitionList*[?Yield, ?Await] , *PropertyDefinition*[?Yield, ?Await]

PropertyDefinition[Yield, Await] :
- *IdentifierReference*[?Yield, ?Await]
- *CoverInitializedName*[?Yield, ?Await]
- *PropertyName*[?Yield, ?Await] : *AssignmentExpression*[+In, ?Yield, ?Await]
- *MethodDefinition*[?Yield, ?Await]
- ... *AssignmentExpression*[+In, ?Yield, ?Await]

PropertyName[Yield, Await] :
- *LiteralPropertyName*
- *ComputedPropertyName*[?Yield, ?Await]

LiteralPropertyName :
- *IdentifierName*
- *StringLiteral*
- *NumericLiteral*

ComputedPropertyName[Yield, Await] :
- [*AssignmentExpression*[+In, ?Yield, ?Await]]

CoverInitializedName[Yield, Await] :
- *IdentifierReference*[?Yield, ?Await] *Initializer*[+In, ?Yield, ?Await]

Initializer[In, Yield, Await] :
- = *AssignmentExpression*[?In, ?Yield, ?Await]

NOTE 2 *MethodDefinition* is defined in 14.3.

NOTE 3 In certain contexts, *ObjectLiteral* is used as a cover grammar for a more restricted secondary grammar. The *CoverInitializedName* production is necessary to fully cover these secondary grammars. However, use of this production results in an early Syntax Error in normal contexts where an actual *ObjectLiteral* is expected.

12.2.6.1 Static Semantics: Early Errors

PropertyDefinition : *MethodDefinition*

- It is a Syntax Error if HasDirectSuper of *MethodDefinition* is **true**.

In addition to describing an actual object initializer the *ObjectLiteral* productions are also used as a cover grammar for *ObjectAssignmentPattern* and may be recognized as part of a *CoverParenthesizedExpressionAndArrowParameterList*. When *ObjectLiteral* appears in a context where *ObjectAssignmentPattern* is required the following Early Error rules are **not** applied. In addition, they are not applied when initially parsing a *CoverParenthesizedExpressionAndArrowParameterList* or *CoverCallExpressionAndAsyncArrowHead*.

PropertyDefinition : *CoverInitializedName*

- Always throw a Syntax Error if code matches this production.

NOTE This production exists so that *ObjectLiteral* can serve as a cover grammar for *ObjectAssignmentPattern*. It cannot occur in an actual object initializer.

12.2.6.2 Static Semantics: ComputedPropertyContains

With parameter *symbol*.

PropertyName : *LiteralPropertyName*

1. Return **false**.

PropertyName : *ComputedPropertyName*

1. Return the result of *ComputedPropertyName* Contains *symbol*.

12.2.6.3 Static Semantics: Contains

With parameter *symbol*.

PropertyDefinition : *MethodDefinition*

1. If *symbol* is *MethodDefinition*, return **true**.
2. Return the result of ComputedPropertyContains for *MethodDefinition* with argument *symbol*.

NOTE Static semantic rules that depend upon substructure generally do not look into function definitions.

LiteralPropertyName : *IdentifierName*

1. If *symbol* is a *ReservedWord*, return **false**.
2. If *symbol* is an *Identifier* and StringValue of *symbol* is the same value as the StringValue of *IdentifierName*, return **true**.
3. Return **false**.

12.2.6.4 Static Semantics: IsComputedPropertyKey

PropertyName : *LiteralPropertyName*

1. Return **false**.

PropertyName : *ComputedPropertyName*

1. Return **true**.

12.2.6.5 Static Semantics: PropName

PropertyDefinition : *IdentifierReference*

1. Return StringValue of *IdentifierReference*.

PropertyDefinition : ... *AssignmentExpression*

1. Return empty.

PropertyDefinition : *PropertyName* : *AssignmentExpression*

1. Return PropName of *PropertyName*.

LiteralPropertyName : *IdentifierName*

1. Return StringValue of *IdentifierName*.

LiteralPropertyName : *StringLiteral*

1. Return the String value whose code units are the SV of *StringLiteral*.

LiteralPropertyName : *NumericLiteral*

1. Let *nbr* be the NumericValue of *NumericLiteral*.
2. Return ! ToString(*nbr*).

ComputedPropertyName : [*AssignmentExpression*]

1. Return empty.

12.2.6.6 Static Semantics: PropertyNameList

PropertyDefinitionList : *PropertyDefinition*

1. If PropName of *PropertyDefinition* is empty, return a new empty List.
2. Return a new List containing PropName of *PropertyDefinition*.

PropertyDefinitionList : *PropertyDefinitionList* , *PropertyDefinition*

1. Let *list* be PropertyNameList of *PropertyDefinitionList*.

2. If PropName of *PropertyDefinition* is empty, return *list*.
3. Append PropName of *PropertyDefinition* to the end of *list*.
4. Return *list*.

12.2.6.7 Runtime Semantics: Evaluation

ObjectLiteral : `{ }`

1. Return OrdinaryObjectCreate(%Object.prototype%).

ObjectLiteral :
  `{` *PropertyDefinitionList* `}`
  `{` *PropertyDefinitionList* `, }`

1. Let *obj* be OrdinaryObjectCreate(%Object.prototype%).
2. Perform ? PropertyDefinitionEvaluation of *PropertyDefinitionList* with arguments *obj* and **true**.
3. Return *obj*.

LiteralPropertyName : *IdentifierName*

1. Return StringValue of *IdentifierName*.

LiteralPropertyName : *StringLiteral*

1. Return the String value whose code units are the SV of *StringLiteral*.

LiteralPropertyName : *NumericLiteral*

1. Let *nbr* be the NumericValue of *NumericLiteral*.
2. Return ! ToString(*nbr*).

ComputedPropertyName : `[` *AssignmentExpression* `]`

1. Let *exprValue* be the result of evaluating *AssignmentExpression*.
2. Let *propName* be ? GetValue(*exprValue*).
3. Return ? ToPropertyKey(*propName*).

12.2.6.8 Runtime Semantics: PropertyDefinitionEvaluation

With parameters *object* and *enumerable*.

PropertyDefinitionList : *PropertyDefinitionList* `,` *PropertyDefinition*

1. Perform ? PropertyDefinitionEvaluation of *PropertyDefinitionList* with arguments *object* and *enumerable*.
2. Return the result of performing PropertyDefinitionEvaluation of *PropertyDefinition* with arguments *object* and *enumerable*.

PropertyDefinition : `...` *AssignmentExpression*

1. Let *exprValue* be the result of evaluating *AssignmentExpression*.
2. Let *fromValue* be ? GetValue(*exprValue*).
3. Let *excludedNames* be a new empty List.
4. Return ? CopyDataProperties(*object*, *fromValue*, *excludedNames*).

PropertyDefinition : *IdentifierReference*

1. Let *propName* be StringValue of *IdentifierReference*.
2. Let *exprValue* be the result of evaluating *IdentifierReference*.
3. Let *propValue* be ? GetValue(*exprValue*).
4. Assert: *enumerable* is **true**.
5. Assert: *object* is an ordinary, extensible object with no non-configurable properties.
6. Return ! CreateDataPropertyOrThrow(*object*, *propName*, *propValue*).

PropertyDefinition : *PropertyName* : *AssignmentExpression*

1. Let *propKey* be the result of evaluating *PropertyName*.
2. ReturnIfAbrupt(*propKey*).
3. If IsAnonymousFunctionDefinition(*AssignmentExpression*) is **true**, then
   a. Let *propValue* be NamedEvaluation of *AssignmentExpression* with argument *propKey*.
4. Else,
   a. Let *exprValueRef* be the result of evaluating *AssignmentExpression*.
   b. Let *propValue* be ? GetValue(*exprValueRef*).
5. Assert: *enumerable* is **true**.
6. Assert: *object* is an ordinary, extensible object with no non-configurable properties.
7. Return ! CreateDataPropertyOrThrow(*object*, *propKey*, *propValue*).

NOTE An alternative semantics for this production is given in B.3.1.

12.2.7 Function Defining Expressions

See 14.1 for *PrimaryExpression* : *FunctionExpression* .

See 14.4 for *PrimaryExpression* : *GeneratorExpression* .

See 14.6 for *PrimaryExpression* : *ClassExpression* .

See 14.7 for *PrimaryExpression* : *AsyncFunctionExpression* .

See 14.5 for *PrimaryExpression* : *AsyncGeneratorExpression* .

12.2.8 Regular Expression Literals

Syntax

See 11.8.5.

12.2.8.1 Static Semantics: Early Errors

PrimaryExpression : *RegularExpressionLiteral*

- It is a Syntax Error if IsValidRegularExpressionLiteral(*RegularExpressionLiteral*) is **false**.

12.2.8.2 Static Semantics: IsValidRegularExpressionLiteral (*literal*)

The abstract operation IsValidRegularExpressionLiteral determines if its argument is a valid regular expression literal. The following steps are taken:

1. Assert: *literal* is a *RegularExpressionLiteral*.
2. If FlagText of *literal* contains any code points other than **g**, **i**, **m**, **s**, **u**, or **y**, or if it contains the same code point more than once, return **false**.
3. Let *P* be BodyText of *literal*.
4. If FlagText of *literal* contains **u**, then
   a. Parse *P* using the grammars in 21.2.1. The goal symbol for the parse is $Pattern_{[+U,\ +N]}$. If *P* did not conform to the grammar, if any elements of *P* were not matched by the parse, or if any Early Error conditions exist, return **false**. Otherwise, return **true**.
5. Let *stringValue* be UTF16Encode(*P*).
6. Let *pText* be the sequence of code points resulting from interpreting each of the 16-bit elements of *stringValue* as a Unicode BMP code point. UTF-16 decoding is not applied to the elements.
7. Parse *pText* using the grammars in 21.2.1. The goal symbol for the parse is $Pattern_{[\sim U,\ \sim N]}$. If the result of parsing contains a *GroupName*, reparse with the goal symbol $Pattern_{[\sim U,\ +N]}$. If *P* did not conform to the grammar, if any elements of *P* were not matched by the parse, or if any Early Error conditions exist, return **false**. Otherwise, return **true**.

12.2.8.3 Runtime Semantics: Evaluation

PrimaryExpression : *RegularExpressionLiteral*

1. Let *pattern* be ! UTF16Encode(BodyText of *RegularExpressionLiteral*).
2. Let *flags* be ! UTF16Encode(FlagText of *RegularExpressionLiteral*).
3. Return RegExpCreate(*pattern*, *flags*).

12.2.9 Template Literals

Syntax

$TemplateLiteral_{[Yield,\ Await,\ Tagged]}$:
  NoSubstitutionTemplate
  $SubstitutionTemplate_{[?Yield,\ ?Await,\ ?Tagged]}$

$SubstitutionTemplate_{[Yield,\ Await,\ Tagged]}$:
  TemplateHead $Expression_{[+In,\ ?Yield,\ ?Await]}$ $TemplateSpans_{[?Yield,\ ?Await,\ ?Tagged]}$

$TemplateSpans_{[Yield,\ Await,\ Tagged]}$:
  TemplateTail
  $TemplateMiddleList_{[?Yield,\ ?Await,\ ?Tagged]}$ *TemplateTail*

$TemplateMiddleList_{[Yield,\ Await,\ Tagged]}$:
  TemplateMiddle $Expression_{[+In,\ ?Yield,\ ?Await]}$
  $TemplateMiddleList_{[?Yield,\ ?Await,\ ?Tagged]}$ *TemplateMiddle* $Expression_{[+In,\ ?Yield,\ ?Await]}$

12.2.9.1 Static Semantics: Early Errors

$TemplateLiteral_{[Yield,\ Await,\ Tagged]}$: *NoSubstitutionTemplate*

- It is a Syntax Error if the [Tagged] parameter was not set and *NoSubstitutionTemplate* Contains *NotEscapeSequence*.

TemplateLiteral[Yield, Await, Tagged] : *SubstitutionTemplate*[?Yield, ?Await, ?Tagged]

- It is a Syntax Error if the number of elements in the result of TemplateStrings of *TemplateLiteral* with argument **false** is greater than 2^{32} - 1.

SubstitutionTemplate[Yield, Await, Tagged] : *TemplateHead* *Expression*[+In, ?Yield, ?Await] *TemplateSpans*[?Yield, ?Await, ?Tagged]

- It is a Syntax Error if the [Tagged] parameter was not set and *TemplateHead* Contains *NotEscapeSequence*.

TemplateSpans[Yield, Await, Tagged] : *TemplateTail*

- It is a Syntax Error if the [Tagged] parameter was not set and *TemplateTail* Contains *NotEscapeSequence*.

TemplateMiddleList[Yield, Await, Tagged] :
TemplateMiddle *Expression*[+In, ?Yield, ?Await]
TemplateMiddleList[?Yield, ?Await, ?Tagged] *TemplateMiddle* *Expression*[+In, ?Yield, ?Await]

- It is a Syntax Error if the [Tagged] parameter was not set and *TemplateMiddle* Contains *NotEscapeSequence*.

12.2.9.2 Static Semantics: TemplateStrings

With parameter *raw*.

TemplateLiteral : *NoSubstitutionTemplate*

1. If *raw* is **false**, then
   a. Let *string* be the TV of *NoSubstitutionTemplate*.
2. Else,
   a. Let *string* be the TRV of *NoSubstitutionTemplate*.
3. Return a List containing the single element, *string*.

SubstitutionTemplate : *TemplateHead* *Expression* *TemplateSpans*

1. If *raw* is **false**, then
   a. Let *head* be the TV of *TemplateHead*.
2. Else,
   a. Let *head* be the TRV of *TemplateHead*.
3. Let *tail* be TemplateStrings of *TemplateSpans* with argument *raw*.
4. Return a List containing *head* followed by the elements, in order, of *tail*.

TemplateSpans : *TemplateTail*

1. If *raw* is **false**, then
   a. Let *tail* be the TV of *TemplateTail*.
2. Else,
   a. Let *tail* be the TRV of *TemplateTail*.
3. Return a List containing the single element, *tail*.

TemplateSpans : *TemplateMiddleList* *TemplateTail*

1. Let *middle* be TemplateStrings of *TemplateMiddleList* with argument *raw*.
2. If *raw* is **false**, then
   a. Let *tail* be the TV of *TemplateTail*.
3. Else,
   a. Let *tail* be the TRV of *TemplateTail*.
4. Return a List containing the elements, in order, of *middle* followed by *tail*.

TemplateMiddleList : *TemplateMiddle* *Expression*

1. If *raw* is **false**, then
   a. Let *string* be the TV of *TemplateMiddle*.
2. Else,
   a. Let *string* be the TRV of *TemplateMiddle*.
3. Return a List containing the single element, *string*.

TemplateMiddleList : *TemplateMiddleList* *TemplateMiddle* *Expression*

1. Let *front* be TemplateStrings of *TemplateMiddleList* with argument *raw*.
2. If *raw* is **false**, then
   a. Let *last* be the TV of *TemplateMiddle*.
3. Else,
   a. Let *last* be the TRV of *TemplateMiddle*.
4. Append *last* as the last element of the List *front*.
5. Return *front*.

12.2.9.3 Runtime Semantics: ArgumentListEvaluation

TemplateLiteral : *NoSubstitutionTemplate*

1. Let *templateLiteral* be this *TemplateLiteral*.
2. Let *siteObj* be GetTemplateObject(*templateLiteral*).
3. Return a List containing the one element which is *siteObj*.

SubstitutionTemplate : *TemplateHead* *Expression* *TemplateSpans*

1. Let *templateLiteral* be this *TemplateLiteral*.
2. Let *siteObj* be GetTemplateObject(*templateLiteral*).
3. Let *firstSubRef* be the result of evaluating *Expression*.
4. Let *firstSub* be ? GetValue(*firstSubRef*).
5. Let *restSub* be ? SubstitutionEvaluation of *TemplateSpans*.
6. Assert: *restSub* is a List.
7. Return a List whose first element is *siteObj*, whose second elements is *firstSub*, and whose subsequent elements are the elements of *restSub*, in order. *restSub* may contain no elements.

12.2.9.4 Runtime Semantics: GetTemplateObject (*templateLiteral*)

The abstract operation GetTemplateObject is called with a Parse Node, *templateLiteral*, as an argument. It performs the following steps:

1. Let *rawStrings* be TemplateStrings of *templateLiteral* with argument **true**.

2. Let *realm* be the current Realm Record.
3. Let *templateRegistry* be *realm*.[[TemplateMap]].
4. For each element *e* of *templateRegistry*, do
    a. If *e*.[[Site]] is the same Parse Node as *templateLiteral*, then
        i. Return *e*.[[Array]].
5. Let *cookedStrings* be TemplateStrings of *templateLiteral* with argument **false**.
6. Let *count* be the number of elements in the List *cookedStrings*.
7. Assert: $count \leq 2^{32} - 1$.
8. Let *template* be ! ArrayCreate(*count*).
9. Let *rawObj* be ! ArrayCreate(*count*).
10. Let *index* be 0.
11. Repeat, while *index* < *count*
    a. Let *prop* be ! ToString(*index*).
    b. Let *cookedValue* be the String value *cookedStrings*[*index*].
    c. Call *template*.[[DefineOwnProperty]](*prop*, PropertyDescriptor { [[Value]]: *cookedValue*, [[Writable]]: **false**, [[Enumerable]]: **true**, [[Configurable]]: **false** }).
    d. Let *rawValue* be the String value *rawStrings*[*index*].
    e. Call *rawObj*.[[DefineOwnProperty]](*prop*, PropertyDescriptor { [[Value]]: *rawValue*, [[Writable]]: **false**, [[Enumerable]]: **true**, [[Configurable]]: **false** }).
    f. Set *index* to *index* + 1.
12. Perform SetIntegrityLevel(*rawObj*, frozen).
13. Call *template*.[[DefineOwnProperty]](**"raw"**, PropertyDescriptor { [[Value]]: *rawObj*, [[Writable]]: **false**, [[Enumerable]]: **false**, [[Configurable]]: **false** }).
14. Perform SetIntegrityLevel(*template*, frozen).
15. Append the Record { [[Site]]: *templateLiteral*, [[Array]]: *template* } to *templateRegistry*.
16. Return *template*.

NOTE 1 The creation of a template object cannot result in an abrupt completion.

NOTE 2 Each *TemplateLiteral* in the program code of a realm is associated with a unique template object that is used in the evaluation of tagged Templates (12.2.9.6). The template objects are frozen and the same template object is used each time a specific tagged Template is evaluated. Whether template objects are created lazily upon first evaluation of the *TemplateLiteral* or eagerly prior to first evaluation is an implementation choice that is not observable to ECMAScript code.

NOTE 3 Future editions of this specification may define additional non-enumerable properties of template objects.

12.2.9.5 Runtime Semantics: SubstitutionEvaluation

TemplateSpans : *TemplateTail*

1. Return a new empty List.

TemplateSpans : *TemplateMiddleList* *TemplateTail*

1. Return the result of SubstitutionEvaluation of *TemplateMiddleList*.

TemplateMiddleList : *TemplateMiddle* *Expression*

1. Let *subRef* be the result of evaluating *Expression*.
2. Let *sub* be ? GetValue(*subRef*).
3. Return a List containing only *sub*.

TemplateMiddleList : *TemplateMiddleList* *TemplateMiddle* *Expression*

1. Let *preceding* be ? SubstitutionEvaluation of *TemplateMiddleList*.
2. Let *nextRef* be the result of evaluating *Expression*.
3. Let *next* be ? GetValue(*nextRef*).
4. Append *next* as the last element of the List *preceding*.
5. Return *preceding*.

12.2.9.6 Runtime Semantics: Evaluation

TemplateLiteral : *NoSubstitutionTemplate*

1. Return the String value whose code units are the elements of the TV of *NoSubstitutionTemplate* as defined in 11.8.6.

SubstitutionTemplate : *TemplateHead* *Expression* *TemplateSpans*

1. Let *head* be the TV of *TemplateHead* as defined in 11.8.6.
2. Let *subRef* be the result of evaluating *Expression*.
3. Let *sub* be ? GetValue(*subRef*).
4. Let *middle* be ? ToString(*sub*).
5. Let *tail* be the result of evaluating *TemplateSpans*.
6. ReturnIfAbrupt(*tail*).
7. Return the string-concatenation of *head*, *middle*, and *tail*.

NOTE 1 The string conversion semantics applied to the *Expression* value are like **`String.prototype.concat`** rather than the **`+`** operator.

TemplateSpans : *TemplateTail*

1. Let *tail* be the TV of *TemplateTail* as defined in 11.8.6.
2. Return the String value consisting of the code units of *tail*.

TemplateSpans : *TemplateMiddleList* *TemplateTail*

1. Let *head* be the result of evaluating *TemplateMiddleList*.
2. ReturnIfAbrupt(*head*).
3. Let *tail* be the TV of *TemplateTail* as defined in 11.8.6.
4. Return the string-concatenation of *head* and *tail*.

TemplateMiddleList : *TemplateMiddle* *Expression*

1. Let *head* be the TV of *TemplateMiddle* as defined in 11.8.6.
2. Let *subRef* be the result of evaluating *Expression*.
3. Let *sub* be ? GetValue(*subRef*).
4. Let *middle* be ? ToString(*sub*).

5. Return the sequence of code units consisting of the code units of *head* followed by the elements of *middle*.

NOTE 2 The string conversion semantics applied to the *Expression* value are like **`String.prototype.concat`** rather than the **+** operator.

TemplateMiddleList : *TemplateMiddleList* *TemplateMiddle* *Expression*

1. Let *rest* be the result of evaluating *TemplateMiddleList*.
2. ReturnIfAbrupt(*rest*).
3. Let *middle* be the TV of *TemplateMiddle* as defined in 11.8.6.
4. Let *subRef* be the result of evaluating *Expression*.
5. Let *sub* be ? GetValue(*subRef*).
6. Let *last* be ? ToString(*sub*).
7. Return the sequence of code units consisting of the elements of *rest* followed by the code units of *middle* followed by the elements of *last*.

NOTE 3 The string conversion semantics applied to the *Expression* value are like **`String.prototype.concat`** rather than the **+** operator.

12.2.10 The Grouping Operator

12.2.10.1 Static Semantics: Early Errors

PrimaryExpression : *CoverParenthesizedExpressionAndArrowParameterList*

- It is a Syntax Error if *CoverParenthesizedExpressionAndArrowParameterList* is not covering a *ParenthesizedExpression*.
- All Early Error rules for *ParenthesizedExpression* and its derived productions also apply to CoveredParenthesizedExpression of *CoverParenthesizedExpressionAndArrowParameterList*.

12.2.10.2 Static Semantics: IsFunctionDefinition

ParenthesizedExpression : **(** *Expression* **)**

1. Return IsFunctionDefinition of *Expression*.

12.2.10.3 Static Semantics: AssignmentTargetType

ParenthesizedExpression : **(** *Expression* **)**

1. Return AssignmentTargetType of *Expression*.

12.2.10.4 Runtime Semantics: NamedEvaluation

With parameter *name*.

PrimaryExpression : *CoverParenthesizedExpressionAndArrowParameterList*

1. Let *expr* be CoveredParenthesizedExpression of *CoverParenthesizedExpressionAndArrowParameterList*.
2. Return the result of performing NamedEvaluation for *expr* with argument *name*.

ParenthesizedExpression : (*Expression*)

1. Assert: IsAnonymousFunctionDefinition(*Expression*) is **true**.
2. Return the result of performing NamedEvaluation for *Expression* with argument *name*.

12.2.10.5 Runtime Semantics: Evaluation

PrimaryExpression : *CoverParenthesizedExpressionAndArrowParameterList*

1. Let *expr* be CoveredParenthesizedExpression of *CoverParenthesizedExpressionAndArrowParameterList*.
2. Return the result of evaluating *expr*.

ParenthesizedExpression : (*Expression*)

1. Return the result of evaluating *Expression*. This may be of type Reference.

> NOTE This algorithm does not apply GetValue to the result of evaluating *Expression*. The principal motivation for this is so that operators such as **`delete`** and **`typeof`** may be applied to parenthesized expressions.

12.3 Left-Hand-Side Expressions

Syntax

MemberExpression[Yield, Await] :
- *PrimaryExpression*[?Yield, ?Await]
- *MemberExpression*[?Yield, ?Await] [*Expression*[+In, ?Yield, ?Await]]
- *MemberExpression*[?Yield, ?Await] . *IdentifierName*
- *MemberExpression*[?Yield, ?Await] *TemplateLiteral*[?Yield, ?Await, +Tagged]
- *SuperProperty*[?Yield, ?Await]
- *MetaProperty*
- **new** *MemberExpression*[?Yield, ?Await] *Arguments*[?Yield, ?Await]

SuperProperty[Yield, Await] :
- **super** [*Expression*[+In, ?Yield, ?Await]]
- **super** . *IdentifierName*

MetaProperty :
- *NewTarget*
- *ImportMeta*

NewTarget :
- **new . target**

ImportMeta :
- **import . meta**

NewExpression[Yield, Await] :
- *MemberExpression*[?Yield, ?Await]

new *NewExpression*[?Yield, ?Await]

CallExpression[Yield, Await] :

CoverCallExpressionAndAsyncArrowHead[?Yield, ?Await]

SuperCall[?Yield, ?Await]

ImportCall[?Yield, ?Await]

CallExpression[?Yield, ?Await] *Arguments*[?Yield, ?Await]

CallExpression[?Yield, ?Await] **[** *Expression*[+In, ?Yield, ?Await] **]**

CallExpression[?Yield, ?Await] **.** *IdentifierName*

CallExpression[?Yield, ?Await] *TemplateLiteral*[?Yield, ?Await, +Tagged]

SuperCall[Yield, Await] :

super *Arguments*[?Yield, ?Await]

ImportCall[Yield, Await] :

import **(** *AssignmentExpression*[+In, ?Yield, ?Await] **)**

Arguments[Yield, Await] :

( )

(*ArgumentList*[?Yield, ?Await] **)**

(*ArgumentList*[?Yield, ?Await] **,)**

ArgumentList[Yield, Await] :

AssignmentExpression[+In, ?Yield, ?Await]

... *AssignmentExpression*[+In, ?Yield, ?Await]

ArgumentList[?Yield, ?Await] **,** *AssignmentExpression*[+In, ?Yield, ?Await]

ArgumentList[?Yield, ?Await] **, ...** *AssignmentExpression*[+In, ?Yield, ?Await]

OptionalExpression[Yield, Await] :

MemberExpression[?Yield, ?Await] *OptionalChain*[?Yield, ?Await]

CallExpression[?Yield, ?Await] *OptionalChain*[?Yield, ?Await]

OptionalExpression[?Yield, ?Await] *OptionalChain*[?Yield, ?Await]

OptionalChain[Yield, Await] :

?. *Arguments*[?Yield, ?Await]

?. [*Expression*[+In, ?Yield, ?Await] **]**

?. *IdentifierName*

?. *TemplateLiteral*[?Yield, ?Await, +Tagged]

OptionalChain[?Yield, ?Await] *Arguments*[?Yield, ?Await]

OptionalChain[?Yield, ?Await] **[** *Expression*[+In, ?Yield, ?Await] **]**

OptionalChain[?Yield, ?Await] **.** *IdentifierName*

OptionalChain[?Yield, ?Await] *TemplateLiteral*[?Yield, ?Await, +Tagged]

LeftHandSideExpression[Yield, Await] :

NewExpression[?Yield, ?Await]

CallExpression[?Yield, ?Await]

OptionalExpression[?Yield, ?Await]

Supplemental Syntax

When processing an instance of the production *CallExpression* : *CoverCallExpressionAndAsyncArrowHead* the interpretation of *CoverCallExpressionAndAsyncArrowHead* is refined using the following grammar:

CallMemberExpression[Yield, Await] :
    MemberExpression[?Yield, ?Await] *Arguments*[?Yield, ?Await]

12.3.1 Static Semantics

12.3.1.1 Static Semantics: Early Errors

OptionalChain :
    `?.` *TemplateLiteral*
    OptionalChain *TemplateLiteral*

- It is a Syntax Error if any code matches this production.

NOTE This production exists in order to prevent automatic semicolon insertion rules (11.9) from being applied to the following code:

```
a?.b
`c`
```

so that it would be interpreted as two valid statements. The purpose is to maintain consistency with similar code without optional chaining:

```
a.b
`c`
```

which is a valid statement and where automatic semicolon insertion does not apply.

ImportMeta :
    import . meta

- It is a Syntax Error if the syntactic goal symbol is not *Module*.

12.3.1.2 Static Semantics: CoveredCallExpression

CoverCallExpressionAndAsyncArrowHead : *MemberExpression* *Arguments*

1. Return the *CallMemberExpression* that is covered by *CoverCallExpressionAndAsyncArrowHead*.

12.3.1.3 Static Semantics: Contains

With parameter *symbol*.

MemberExpression : *MemberExpression* . *IdentifierName*

1. If *MemberExpression* Contains *symbol* is **true**, return **true**.

2. If *symbol* is a *ReservedWord*, return **false**.
3. If *symbol* is an *Identifier* and StringValue of *symbol* is the same value as the StringValue of *IdentifierName*, return **true**.
4. Return **false**.

SuperProperty : `super` . *IdentifierName*

1. If *symbol* is the *ReservedWord* `super`, return **true**.
2. If *symbol* is a *ReservedWord*, return **false**.
3. If *symbol* is an *Identifier* and StringValue of *symbol* is the same value as the StringValue of *IdentifierName*, return **true**.
4. Return **false**.

CallExpression : *CallExpression* . *IdentifierName*

1. If *CallExpression* Contains *symbol* is **true**, return **true**.
2. If *symbol* is a *ReservedWord*, return **false**.
3. If *symbol* is an *Identifier* and StringValue of *symbol* is the same value as the StringValue of *IdentifierName*, return **true**.
4. Return **false**.

OptionalChain : `?.` *IdentifierName*

1. If *symbol* is a *ReservedWord*, return **false**.
2. If *symbol* is an *Identifier* and StringValue of *symbol* is the same value as the StringValue of *IdentifierName*, return **true**.
3. Return **false**.

OptionalChain : *OptionalChain* . *IdentifierName*

1. If *OptionalChain* Contains *symbol* is **true**, return **true**.
2. If *symbol* is a *ReservedWord*, return **false**.
3. If *symbol* is an *Identifier* and StringValue of *symbol* is the same value as the StringValue of *IdentifierName*, return **true**.
4. Return **false**.

12.3.1.4 Static Semantics: IsFunctionDefinition

MemberExpression :
- *MemberExpression* [*Expression*]
- *MemberExpression* . *IdentifierName*
- *MemberExpression* *TemplateLiteral*
- *SuperProperty*
- *MetaProperty*
- `new` *MemberExpression* *Arguments*

NewExpression :
- `new` *NewExpression*

LeftHandSideExpression :
- *CallExpression*
- *OptionalExpression*

1. Return **false**.

12.3.1.5 Static Semantics: IsDestructuring

MemberExpression : *PrimaryExpression*

1. If *PrimaryExpression* is either an *ObjectLiteral* or an *ArrayLiteral*, return **true**.
2. Return **false**.

MemberExpression :
    MemberExpression `[` *Expression* `]`
    MemberExpression `.` *IdentifierName*
    MemberExpression *TemplateLiteral*
    SuperProperty
    MetaProperty
    `new` *MemberExpression* *Arguments*
NewExpression :
    `new` *NewExpression*
LeftHandSideExpression :
    CallExpression
    OptionalExpression

1. Return **false**.

12.3.1.6 Static Semantics: IsIdentifierRef

MemberExpression :
    MemberExpression `[` *Expression* `]`
    MemberExpression `.` *IdentifierName*
    MemberExpression *TemplateLiteral*
    SuperProperty
    MetaProperty
    `new` *MemberExpression* *Arguments*
NewExpression :
    `new` *NewExpression*
LeftHandSideExpression :
    CallExpression
    OptionalExpression

1. Return **false**.

12.3.1.7 Static Semantics: AssignmentTargetType

CallExpression :
    CallExpression `[` *Expression* `]`
    CallExpression `.` *IdentifierName*
MemberExpression :
    MemberExpression `[` *Expression* `]`
    MemberExpression `.` *IdentifierName*
    SuperProperty

1. Return simple.

CallExpression **:**
CoverCallExpressionAndAsyncArrowHead
SuperCall
ImportCall
CallExpression *Arguments*
CallExpression *TemplateLiteral*
NewExpression **:**
new *NewExpression*
MemberExpression **:**
MemberExpression *TemplateLiteral*
new *MemberExpression* *Arguments*
NewTarget **:**
new . target
ImportMeta **:**
import . meta
LeftHandSideExpression **:**
OptionalExpression

1. Return invalid.

12.3.2 Property Accessors

NOTE Properties are accessed by name, using either the dot notation:

MemberExpression **.** *IdentifierName*
CallExpression **.** *IdentifierName*

or the bracket notation:

MemberExpression **[** *Expression* **]**
CallExpression **[** *Expression* **]**

The dot notation is explained by the following syntactic conversion:

MemberExpression **.** *IdentifierName*

is identical in its behaviour to

MemberExpression **[** *<identifier-name-string>* **]**

and similarly

CallExpression **.** *IdentifierName*

is identical in its behaviour to

CallExpression **[** *<identifier-name-string>* **]**

where *<identifier-name-string>* is the result of evaluating StringValue of *IdentifierName*.

12.3.2.1 Runtime Semantics: Evaluation

MemberExpression : *MemberExpression* [*Expression*]

1. Let *baseReference* be the result of evaluating *MemberExpression*.
2. Let *baseValue* be ? GetValue(*baseReference*).
3. If the code matched by this *MemberExpression* is strict mode code, let *strict* be **true**; else let *strict* be **false**.
4. Return ? EvaluatePropertyAccessWithExpressionKey(*baseValue*, *Expression*, *strict*).

MemberExpression : *MemberExpression* . *IdentifierName*

1. Let *baseReference* be the result of evaluating *MemberExpression*.
2. Let *baseValue* be ? GetValue(*baseReference*).
3. If the code matched by this *MemberExpression* is strict mode code, let *strict* be **true**; else let *strict* be **false**.
4. Return ? EvaluatePropertyAccessWithIdentifierKey(*baseValue*, *IdentifierName*, *strict*).

CallExpression : *CallExpression* [*Expression*]

1. Let *baseReference* be the result of evaluating *CallExpression*.
2. Let *baseValue* be ? GetValue(*baseReference*).
3. If the code matched by this *CallExpression* is strict mode code, let *strict* be **true**; else let *strict* be **false**.
4. Return ? EvaluatePropertyAccessWithExpressionKey(*baseValue*, *Expression*, *strict*).

CallExpression : *CallExpression* . *IdentifierName*

1. Let *baseReference* be the result of evaluating *CallExpression*.
2. Let *baseValue* be ? GetValue(*baseReference*).
3. If the code matched by this *CallExpression* is strict mode code, let *strict* be **true**; else let *strict* be **false**.
4. Return ? EvaluatePropertyAccessWithIdentifierKey(*baseValue*, *IdentifierName*, *strict*).

12.3.3 Runtime Semantics: EvaluatePropertyAccessWithExpressionKey (*baseValue*, *expression*, *strict*)

The abstract operation EvaluatePropertyAccessWithExpressionKey takes as arguments a value *baseValue*, a Parse Node *expression*, and a Boolean argument *strict*. It performs the following steps:

1. Let *propertyNameReference* be the result of evaluating *expression*.
2. Let *propertyNameValue* be ? GetValue(*propertyNameReference*).
3. Let *bv* be ? RequireObjectCoercible(*baseValue*).
4. Let *propertyKey* be ? ToPropertyKey(*propertyNameValue*).
5. Return a value of type Reference whose base value component is *bv*, whose referenced name component is *propertyKey*, and whose strict reference flag is *strict*.

12.3.4 Runtime Semantics: EvaluatePropertyAccessWithIdentifierKey (*baseValue*, *identifierName*, *strict*)

The abstract operation EvaluatePropertyAccessWithIdentifierKey takes as arguments a value *baseValue*, a Parse Node *identifierName*, and a Boolean argument *strict*. It performs the following steps:

1. Assert: *identifierName* is an *IdentifierName*.
2. Let *bv* be ? RequireObjectCoercible(*baseValue*).
3. Let *propertyNameString* be StringValue of *identifierName*.

4. Return a value of type Reference whose base value component is *bv*, whose referenced name component is *propertyNameString*, and whose strict reference flag is *strict*.

12.3.5 The `new` Operator

12.3.5.1 Runtime Semantics: Evaluation

NewExpression : `new` *NewExpression*

1. Return ? EvaluateNew(*NewExpression*, empty).

MemberExpression : `new` *MemberExpression* *Arguments*

1. Return ? EvaluateNew(*MemberExpression*, *Arguments*).

12.3.5.1.1 Runtime Semantics: EvaluateNew (*constructExpr*, *arguments*)

The abstract operation EvaluateNew with arguments *constructExpr*, and *arguments* performs the following steps:

1. Assert: *constructExpr* is either a *NewExpression* or a *MemberExpression*.
2. Assert: *arguments* is either empty or an *Arguments*.
3. Let *ref* be the result of evaluating *constructExpr*.
4. Let *constructor* be ? GetValue(*ref*).
5. If *arguments* is empty, let *argList* be a new empty List.
6. Else,
   a. Let *argList* be ? ArgumentListEvaluation of *arguments*.
7. If IsConstructor(*constructor*) is **false**, throw a **TypeError** exception.
8. Return ? Construct(*constructor*, *argList*).

12.3.6 Function Calls

12.3.6.1 Runtime Semantics: Evaluation

CallExpression : *CoverCallExpressionAndAsyncArrowHead*

1. Let *expr* be CoveredCallExpression of *CoverCallExpressionAndAsyncArrowHead*.
2. Let *memberExpr* be the *MemberExpression* of *expr*.
3. Let *arguments* be the *Arguments* of *expr*.
4. Let *ref* be the result of evaluating *memberExpr*.
5. Let *func* be ? GetValue(*ref*).
6. If Type(*ref*) is Reference, IsPropertyReference(*ref*) is **false**, and GetReferencedName(*ref*) is **"eval"**, then
   a. If SameValue(*func*, %eval%) is **true**, then
      i. Let *argList* be ? ArgumentListEvaluation of *arguments*.
      ii. If *argList* has no elements, return **undefined**.
      iii. Let *evalArg* be the first element of *argList*.
      iv. If the source code matching this *CallExpression* is strict mode code, let *strictCaller* be **true**. Otherwise let *strictCaller* be **false**.
      v. Let *evalRealm* be the current Realm Record.
      vi. Return ? PerformEval(*evalArg*, *evalRealm*, *strictCaller*, **true**).
7. Let *thisCall* be this *CallExpression*.

8. Let *tailCall* be IsInTailPosition(*thisCall*).
9. Return ? EvaluateCall(*func*, *ref*, *arguments*, *tailCall*).

A *CallExpression* evaluation that executes step 6.a.vi is a *direct eval*.

CallExpression **:** *CallExpression* *Arguments*

1. Let *ref* be the result of evaluating *CallExpression*.
2. Let *func* be ? GetValue(*ref*).
3. Let *thisCall* be this *CallExpression*.
4. Let *tailCall* be IsInTailPosition(*thisCall*).
5. Return ? EvaluateCall(*func*, *ref*, *Arguments*, *tailCall*).

12.3.6.2 Runtime Semantics: EvaluateCall (*func*, *ref*, *arguments*, *tailPosition*)

The abstract operation EvaluateCall takes as arguments a value *func*, a value *ref*, a Parse Node *arguments*, and a Boolean argument *tailPosition*. It performs the following steps:

1. If Type(*ref*) is Reference, then
    a. If IsPropertyReference(*ref*) is **true**, then
        i. Let *thisValue* be GetThisValue(*ref*).
    b. Else,
        i. Assert: the base of *ref* is an Environment Record.
        ii. Let *refEnv* be GetBase(*ref*).
        iii. Let *thisValue* be *refEnv*.WithBaseObject().
2. Else,
    a. Let *thisValue* be **undefined**.
3. Let *argList* be ? ArgumentListEvaluation of *arguments*.
4. If Type(*func*) is not Object, throw a **TypeError** exception.
5. If IsCallable(*func*) is **false**, throw a **TypeError** exception.
6. If *tailPosition* is **true**, perform PrepareForTailCall().
7. Let *result* be Call(*func*, *thisValue*, *argList*).
8. Assert: If *tailPosition* is **true**, the above call will not return here, but instead evaluation will continue as if the following return has already occurred.
9. Assert: If *result* is not an abrupt completion, then Type(*result*) is an ECMAScript language type.
10. Return *result*.

12.3.7 The `super` Keyword

12.3.7.1 Runtime Semantics: Evaluation

SuperProperty **:** `super` `[` *Expression* `]`

1. Let *env* be GetThisEnvironment().
2. Let *actualThis* be ? *env*.GetThisBinding().
3. Let *propertyNameReference* be the result of evaluating *Expression*.
4. Let *propertyNameValue* be ? GetValue(*propertyNameReference*).
5. Let *propertyKey* be ? ToPropertyKey(*propertyNameValue*).
6. If the code matched by this *SuperProperty* is strict mode code, let *strict* be **true**; else let *strict* be **false**.
7. Return ? MakeSuperPropertyReference(*actualThis*, *propertyKey*, *strict*).

SuperProperty **: super .** *IdentifierName*

1. Let *env* be GetThisEnvironment().
2. Let *actualThis* be ? *env*.GetThisBinding().
3. Let *propertyKey* be StringValue of *IdentifierName*.
4. If the code matched by this *SuperProperty* is strict mode code, let *strict* be **true**; else let *strict* be **false**.
5. Return ? MakeSuperPropertyReference(*actualThis*, *propertyKey*, *strict*).

SuperCall **: super** *Arguments*

1. Let *newTarget* be GetNewTarget().
2. Assert: Type(*newTarget*) is Object.
3. Let *func* be ! GetSuperConstructor().
4. Let *argList* be ? ArgumentListEvaluation of *Arguments*.
5. If IsConstructor(*func*) is **false**, throw a **TypeError** exception.
6. Let *result* be ? Construct(*func*, *argList*, *newTarget*).
7. Let *thisER* be GetThisEnvironment().
8. Return ? *thisER*.BindThisValue(*result*).

12.3.7.2 Runtime Semantics: GetSuperConstructor ( )

The abstract operation GetSuperConstructor performs the following steps:

1. Let *envRec* be GetThisEnvironment().
2. Assert: *envRec* is a function Environment Record.
3. Let *activeFunction* be *envRec*.[[FunctionObject]].
4. Assert: *activeFunction* is an ECMAScript function object.
5. Let *superConstructor* be ! *activeFunction*.[[GetPrototypeOf]]().
6. Return *superConstructor*.

12.3.7.3 Runtime Semantics: MakeSuperPropertyReference (*actualThis*, *propertyKey*, *strict*)

The abstract operation MakeSuperPropertyReference with arguments *actualThis*, *propertyKey*, and *strict* performs the following steps:

1. Let *env* be GetThisEnvironment().
2. Assert: *env*.HasSuperBinding() is **true**.
3. Let *baseValue* be ? *env*.GetSuperBase().
4. Let *bv* be ? RequireObjectCoercible(*baseValue*).
5. Return a value of type Reference that is a Super Reference whose base value component is *bv*, whose referenced name component is *propertyKey*, whose thisValue component is *actualThis*, and whose strict reference flag is *strict*.

12.3.8 Argument Lists

NOTE The evaluation of an argument list produces a List of values.

12.3.8.1 Runtime Semantics: ArgumentListEvaluation

Arguments : ( )

1. Return a new empty List.

ArgumentList : *AssignmentExpression*

1. Let *ref* be the result of evaluating *AssignmentExpression*.
2. Let *arg* be ? GetValue(*ref*).
3. Return a List whose sole item is *arg*.

ArgumentList : ... *AssignmentExpression*

1. Let *list* be a new empty List.
2. Let *spreadRef* be the result of evaluating *AssignmentExpression*.
3. Let *spreadObj* be ? GetValue(*spreadRef*).
4. Let *iteratorRecord* be ? GetIterator(*spreadObj*).
5. Repeat,
    a. Let *next* be ? IteratorStep(*iteratorRecord*).
    b. If *next* is **false**, return *list*.
    c. Let *nextArg* be ? IteratorValue(*next*).
    d. Append *nextArg* as the last element of *list*.

ArgumentList : *ArgumentList* , *AssignmentExpression*

1. Let *precedingArgs* be ? ArgumentListEvaluation of *ArgumentList*.
2. Let *ref* be the result of evaluating *AssignmentExpression*.
3. Let *arg* be ? GetValue(*ref*).
4. Append *arg* to the end of *precedingArgs*.
5. Return *precedingArgs*.

ArgumentList : *ArgumentList* , ... *AssignmentExpression*

1. Let *precedingArgs* be ? ArgumentListEvaluation of *ArgumentList*.
2. Let *spreadRef* be the result of evaluating *AssignmentExpression*.
3. Let *iteratorRecord* be ? GetIterator(? GetValue(*spreadRef*)).
4. Repeat,
    a. Let *next* be ? IteratorStep(*iteratorRecord*).
    b. If *next* is **false**, return *precedingArgs*.
    c. Let *nextArg* be ? IteratorValue(*next*).
    d. Append *nextArg* as the last element of *precedingArgs*.

12.3.9 Optional Chains

NOTE An optional chain is a chain of one or more property accesses and function calls, the first of which begins with the token **?.**.

12.3.9.1 Runtime Semantics: Evaluation

OptionalExpression :

MemberExpression *OptionalChain*

1. Let *baseReference* be the result of evaluating *MemberExpression*.
2. Let *baseValue* be ? GetValue(*baseReference*).
3. If *baseValue* is **undefined** or **null**, then
    a. Return **undefined**.
4. Return the result of performing ChainEvaluation of *OptionalChain* with arguments *baseValue* and *baseReference*.

OptionalExpression **:**
    CallExpression *OptionalChain*

1. Let *baseReference* be the result of evaluating *CallExpression*.
2. Let *baseValue* be ? GetValue(*baseReference*).
3. If *baseValue* is **undefined** or **null**, then
    a. Return **undefined**.
4. Return the result of performing ChainEvaluation of *OptionalChain* with arguments *baseValue* and *baseReference*.

OptionalExpression **:**
    OptionalExpression *OptionalChain*

1. Let *baseReference* be the result of evaluating *OptionalExpression*.
2. Let *baseValue* be ? GetValue(*baseReference*).
3. If *baseValue* is **undefined** or **null**, then
    a. Return **undefined**.
4. Return the result of performing ChainEvaluation of *OptionalChain* with arguments *baseValue* and *baseReference*.

12.3.9.2 Runtime Semantics: ChainEvaluation

With parameters *baseValue* and *baseReference*.

OptionalChain **:** `?.` *Arguments*

1. Let *thisChain* be this *OptionalChain*.
2. Let *tailCall* be IsInTailPosition(*thisChain*).
3. Return ? EvaluateCall(*baseValue*, *baseReference*, *Arguments*, *tailCall*).

OptionalChain **:** `?.` `[` *Expression* `]`

1. If the code matched by this *OptionalChain* is strict mode code, let *strict* be **true**; else let *strict* be **false**.
2. Return ? EvaluatePropertyAccessWithExpressionKey(*baseValue*, *Expression*, *strict*).

OptionalChain **:** `?.` *IdentifierName*

1. If the code matched by this *OptionalChain* is strict mode code, let *strict* be **true**; else let *strict* be **false**.
2. Return ? EvaluatePropertyAccessWithIdentifierKey(*baseValue*, *IdentifierName*, *strict*).

OptionalChain **:** *OptionalChain* *Arguments*

1. Let *optionalChain* be *OptionalChain*.
2. Let *newReference* be ? ChainEvaluation of *optionalChain* with arguments *baseValue* and *baseReference*.
3. Let *newValue* be ? GetValue(*newReference*).
4. Let *thisChain* be this *OptionalChain*.
5. Let *tailCall* be IsInTailPosition(*thisChain*).
6. Return ? EvaluateCall(*newValue*, *newReference*, *Arguments*, *tailCall*).

OptionalChain : *OptionalChain* [*Expression*]

1. Let *optionalChain* be *OptionalChain*.
2. Let *newReference* be ? ChainEvaluation of *optionalChain* with arguments *baseValue* and *baseReference*.
3. Let *newValue* be ? GetValue(*newReference*).
4. If the code matched by this *OptionalChain* is strict mode code, let *strict* be **true**; else let *strict* be **false**.
5. Return ? EvaluatePropertyAccessWithExpressionKey(*newValue*, *Expression*, *strict*).

OptionalChain : *OptionalChain* . *IdentifierName*

1. Let *optionalChain* be *OptionalChain*.
2. Let *newReference* be ? ChainEvaluation of *optionalChain* with arguments *baseValue* and *baseReference*.
3. Let *newValue* be ? GetValue(*newReference*).
4. If the code matched by this *OptionalChain* is strict mode code, let *strict* be **true**; else let *strict* be **false**.
5. Return ? EvaluatePropertyAccessWithIdentifierKey(*newValue*, *IdentifierName*, *strict*).

12.3.10 Import Calls

12.3.10.1 Runtime Semantics: Evaluation

ImportCall : `import` (*AssignmentExpression*)

1. Let *referencingScriptOrModule* be ! GetActiveScriptOrModule().
2. Let *argRef* be the result of evaluating *AssignmentExpression*.
3. Let *specifier* be ? GetValue(*argRef*).
4. Let *promiseCapability* be ! NewPromiseCapability(%Promise%).
5. Let *specifierString* be ToString(*specifier*).
6. IfAbruptRejectPromise(*specifierString*, *promiseCapability*).
7. Perform ! HostImportModuleDynamically(*referencingScriptOrModule*, *specifierString*, *promiseCapability*).
8. Return *promiseCapability*.[[Promise]].

12.3.11 Tagged Templates

NOTE A tagged template is a function call where the arguments of the call are derived from a *TemplateLiteral* (12.2.9). The actual arguments include a template object (12.2.9.4) and the values produced by evaluating the expressions embedded within the *TemplateLiteral*.

12.3.11.1 Runtime Semantics: Evaluation

MemberExpression : *MemberExpression* *TemplateLiteral*

1. Let *tagRef* be the result of evaluating *MemberExpression*.
2. Let *tagFunc* be ? GetValue(*tagRef*).
3. Let *thisCall* be this *MemberExpression*.
4. Let *tailCall* be IsInTailPosition(*thisCall*).
5. Return ? EvaluateCall(*tagFunc*, *tagRef*, *TemplateLiteral*, *tailCall*).

CallExpression : *CallExpression* *TemplateLiteral*

1. Let *tagRef* be the result of evaluating *CallExpression*.

2. Let *tagFunc* be ? GetValue(*tagRef*).
3. Let *thisCall* be this *CallExpression*.
4. Let *tailCall* be IsInTailPosition(*thisCall*).
5. Return ? EvaluateCall(*tagFunc*, *tagRef*, *TemplateLiteral*, *tailCall*).

12.3.12 Meta Properties

12.3.12.1 Runtime Semantics: Evaluation

NewTarget `: new . target`

1. Return GetNewTarget().

ImportMeta `: import . meta`

1. Let *module* be ! GetActiveScriptOrModule().
2. Assert: *module* is a Source Text Module Record.
3. Let *importMeta* be *module*.[[ImportMeta]].
4. If *importMeta* is empty, then
    a. Set *importMeta* to ! OrdinaryObjectCreate(**null**).
    b. Let *importMetaValues* be ! HostGetImportMetaProperties(*module*).
    c. For each Record { [[Key]], [[Value]] } *p* that is an element of *importMetaValues*, do
        i. Perform ! CreateDataPropertyOrThrow(*importMeta*, *p*.[[Key]], *p*.[[Value]]).
    d. Perform ! HostFinalizeImportMeta(*importMeta*, *module*).
    e. Set *module*.[[ImportMeta]] to *importMeta*.
    f. Return *importMeta*.
5. Else,
    a. Assert: Type(*importMeta*) is Object.
    b. Return *importMeta*.

12.3.12.1.1 Runtime Semantics: HostGetImportMetaProperties (*moduleRecord*)

HostGetImportMetaProperties is an implementation-defined abstract operation that allows hosts to provide property keys and values for the object returned from `import.meta`.

The implementation of HostGetImportMetaProperties must conform to the following requirements:

- It must return a List, whose values are all Records with two fields, [[Key]] and [[Value]].
- Each such Record's [[Key]] field must be a property key, i.e., IsPropertyKey must return **true** when applied to it.
- Each such Record's [[Value]] field must be an ECMAScript value.
- It must always complete normally (i.e., not return an abrupt completion).

The default implementation of HostGetImportMetaProperties is to return a new empty List.

12.3.12.1.2 Runtime Semantics: HostFinalizeImportMeta (*importMeta*, *moduleRecord*)

HostFinalizeImportMeta is an implementation-defined abstract operation that allows hosts to perform any extraordinary operations to prepare the object returned from `import.meta`.

Most hosts will be able to simply define HostGetImportMetaProperties, and leave HostFinalizeImportMeta with its

default behavior. However, HostFinalizeImportMeta provides an "escape hatch" for hosts which need to directly manipulate the object before it is exposed to ECMAScript code.

The implementation of HostFinalizeImportMeta must conform to the following requirements:

- It must always complete normally (i.e., not return an abrupt completion).

The default implementation of HostFinalizeImportMeta is to return NormalCompletion(empty).

12.4 Update Expressions

Syntax

UpdateExpression[Yield, Await] :
  LeftHandSideExpression[?Yield, ?Await]
  LeftHandSideExpression[?Yield, ?Await] [no *LineTerminator* here] ++
  LeftHandSideExpression[?Yield, ?Await] [no *LineTerminator* here] --
  ++ *UnaryExpression*[?Yield, ?Await]
  -- *UnaryExpression*[?Yield, ?Await]

12.4.1 Static Semantics: Early Errors

UpdateExpression :
  LeftHandSideExpression ++
  LeftHandSideExpression --

- It is an early Syntax Error if AssignmentTargetType of *LeftHandSideExpression* is not simple.

UpdateExpression :
  ++ *UnaryExpression*
  -- *UnaryExpression*

- It is an early Syntax Error if AssignmentTargetType of *UnaryExpression* is not simple.

12.4.2 Static Semantics: IsFunctionDefinition

UpdateExpression :
  LeftHandSideExpression ++
  LeftHandSideExpression --
  ++ *UnaryExpression*
  -- *UnaryExpression*

1. Return **false**.

12.4.3 Static Semantics: AssignmentTargetType

UpdateExpression :
  LeftHandSideExpression ++
  LeftHandSideExpression --
  ++ *UnaryExpression*

-- *UnaryExpression*

1. Return invalid.

12.4.4 Postfix Increment Operator

12.4.4.1 Runtime Semantics: Evaluation

UpdateExpression : *LeftHandSideExpression* ++

1. Let *lhs* be the result of evaluating *LeftHandSideExpression*.
2. Let *oldValue* be ? ToNumeric(? GetValue(*lhs*)).
3. Let *newValue* be ! Type(*oldValue*)::add(*oldValue*, Type(*oldValue*)::unit).
4. Perform ? PutValue(*lhs*, *newValue*).
5. Return *oldValue*.

12.4.5 Postfix Decrement Operator

12.4.5.1 Runtime Semantics: Evaluation

UpdateExpression : *LeftHandSideExpression* --

1. Let *lhs* be the result of evaluating *LeftHandSideExpression*.
2. Let *oldValue* be ? ToNumeric(? GetValue(*lhs*)).
3. Let *newValue* be ! Type(*oldValue*)::subtract(*oldValue*, Type(*oldValue*)::unit).
4. Perform ? PutValue(*lhs*, *newValue*).
5. Return *oldValue*.

12.4.6 Prefix Increment Operator

12.4.6.1 Runtime Semantics: Evaluation

UpdateExpression : ++ *UnaryExpression*

1. Let *expr* be the result of evaluating *UnaryExpression*.
2. Let *oldValue* be ? ToNumeric(? GetValue(*expr*)).
3. Let *newValue* be ! Type(*oldValue*)::add(*oldValue*, Type(*oldValue*)::unit).
4. Perform ? PutValue(*expr*, *newValue*).
5. Return *newValue*.

12.4.7 Prefix Decrement Operator

12.4.7.1 Runtime Semantics: Evaluation

UpdateExpression : -- *UnaryExpression*

1. Let *expr* be the result of evaluating *UnaryExpression*.
2. Let *oldValue* be ? ToNumeric(? GetValue(*expr*)).
3. Let *newValue* be ! Type(*oldValue*)::subtract(*oldValue*, Type(*oldValue*)::unit).
4. Perform ? PutValue(*expr*, *newValue*).

5. Return *newValue*.

12.5 Unary Operators

Syntax

UnaryExpression[Yield, Await] :
- *UpdateExpression*[?Yield, ?Await]
- **delete** *UnaryExpression*[?Yield, ?Await]
- **void** *UnaryExpression*[?Yield, ?Await]
- **typeof** *UnaryExpression*[?Yield, ?Await]
- **+** *UnaryExpression*[?Yield, ?Await]
- **-** *UnaryExpression*[?Yield, ?Await]
- **~** *UnaryExpression*[?Yield, ?Await]
- **!** *UnaryExpression*[?Yield, ?Await]
- [+Await] *AwaitExpression*[?Yield]

12.5.1 Static Semantics: IsFunctionDefinition

UnaryExpression :
- **delete** *UnaryExpression*
- **void** *UnaryExpression*
- **typeof** *UnaryExpression*
- **+** *UnaryExpression*
- **-** *UnaryExpression*
- **~** *UnaryExpression*
- **!** *UnaryExpression*
- *AwaitExpression*

1. Return **false**.

12.5.2 Static Semantics: AssignmentTargetType

UnaryExpression :
- **delete** *UnaryExpression*
- **void** *UnaryExpression*
- **typeof** *UnaryExpression*
- **+** *UnaryExpression*
- **-** *UnaryExpression*
- **~** *UnaryExpression*
- **!** *UnaryExpression*
- *AwaitExpression*

1. Return invalid.

12.5.3 The `delete` Operator

12.5.3.1 Static Semantics: Early Errors

UnaryExpression : `delete` *UnaryExpression*

- It is a Syntax Error if the *UnaryExpression* is contained in strict mode code and the derived *UnaryExpression* is *PrimaryExpression* : *IdentifierReference* .
- It is a Syntax Error if the derived *UnaryExpression* is *PrimaryExpression* : *CoverParenthesizedExpressionAndArrowParameterList* and *CoverParenthesizedExpressionAndArrowParameterList* ultimately derives a phrase that, if used in place of *UnaryExpression*, would produce a Syntax Error according to these rules. This rule is recursively applied.

NOTE The last rule means that expressions such as `delete (((foo)))` produce early errors because of recursive application of the first rule.

12.5.3.2 Runtime Semantics: Evaluation

UnaryExpression : `delete` *UnaryExpression*

1. Let *ref* be the result of evaluating *UnaryExpression*.
2. ReturnIfAbrupt(*ref*).
3. If Type(*ref*) is not Reference, return **true**.
4. If IsUnresolvableReference(*ref*) is **true**, then
   a. Assert: IsStrictReference(*ref*) is **false**.
   b. Return **true**.
5. If IsPropertyReference(*ref*) is **true**, then
   a. If IsSuperReference(*ref*) is **true**, throw a **ReferenceError** exception.
   b. Let *baseObj* be ! ToObject(GetBase(*ref*)).
   c. Let *deleteStatus* be ? *baseObj*.[[Delete]](GetReferencedName(*ref*)).
   d. If *deleteStatus* is **false** and IsStrictReference(*ref*) is **true**, throw a **TypeError** exception.
   e. Return *deleteStatus*.
6. Else,
   a. Assert: *ref* is a Reference to an Environment Record binding.
   b. Let *bindings* be GetBase(*ref*).
   c. Return ? *bindings*.DeleteBinding(GetReferencedName(*ref*)).

NOTE When a `delete` operator occurs within strict mode code, a **SyntaxError** exception is thrown if its *UnaryExpression* is a direct reference to a variable, function argument, or function name. In addition, if a `delete` operator occurs within strict mode code and the property to be deleted has the attribute { [[Configurable]]: **false** }, a **TypeError** exception is thrown.

12.5.4 The `void` Operator

12.5.4.1 Runtime Semantics: Evaluation

UnaryExpression : `void` *UnaryExpression*

1. Let *expr* be the result of evaluating *UnaryExpression*.
2. Perform ? GetValue(*expr*).
3. Return **undefined**.

NOTE GetValue must be called even though its value is not used because it may have observable side-effects.

12.5.5 The `typeof` Operator

12.5.5.1 Runtime Semantics: Evaluation

UnaryExpression : `typeof` *UnaryExpression*

1. Let *val* be the result of evaluating *UnaryExpression*.
2. If Type(*val*) is Reference, then
   a. If IsUnresolvableReference(*val*) is **true**, return **"undefined"**.
3. Set *val* to ? GetValue(*val*).
4. Return a String according to Table 35.

Table 35: typeof Operator Results

Type of *val*	Result
Undefined	**"undefined"**
Null	**"object"**
Boolean	**"boolean"**
Number	**"number"**
String	**"string"**
Symbol	**"symbol"**
BigInt	**"bigint"**
Object (does not implement [[Call]])	**"object"**
Object (implements [[Call]])	**"function"**

12.5.6 Unary + Operator

NOTE The unary + operator converts its operand to Number type.

12.5.6.1 Runtime Semantics: Evaluation

UnaryExpression : `+` *UnaryExpression*

1. Let *expr* be the result of evaluating *UnaryExpression*.
2. Return ? ToNumber(? GetValue(*expr*)).

12.5.7 Unary − Operator

NOTE The unary **−** operator converts its operand to Number type and then negates it. Negating **+0** produces **-0**, and negating **-0** produces **+0**.

12.5.7.1 Runtime Semantics: Evaluation

UnaryExpression `:` `-` *UnaryExpression*

1. Let *expr* be the result of evaluating *UnaryExpression*.
2. Let *oldValue* be ? ToNumeric(? GetValue(*expr*)).
3. Let *T* be Type(*oldValue*).
4. Return ! *T*::unaryMinus(*oldValue*).

12.5.8 Bitwise NOT Operator (~)

12.5.8.1 Runtime Semantics: Evaluation

UnaryExpression `:` `~` *UnaryExpression*

1. Let *expr* be the result of evaluating *UnaryExpression*.
2. Let *oldValue* be ? ToNumeric(? GetValue(*expr*)).
3. Let *T* be Type(*oldValue*).
4. Return ! *T*::bitwiseNOT(*oldValue*).

12.5.9 Logical NOT Operator (!)

12.5.9.1 Runtime Semantics: Evaluation

UnaryExpression `:` `!` *UnaryExpression*

1. Let *expr* be the result of evaluating *UnaryExpression*.
2. Let *oldValue* be ! ToBoolean(? GetValue(*expr*)).
3. If *oldValue* is **true**, return **false**.
4. Return **true**.

12.6 Exponentiation Operator

Syntax

ExponentiationExpression`[Yield, Await]` `:`
  UnaryExpression`[?Yield, ?Await]`
  UpdateExpression`[?Yield, ?Await]` `**` *ExponentiationExpression*`[?Yield, ?Await]`

12.6.1 Static Semantics: IsFunctionDefinition

ExponentiationExpression `:`
  UpdateExpression `**` *ExponentiationExpression*

1. Return **false**.

12.6.2 Static Semantics: AssignmentTargetType

ExponentiationExpression **:**
UpdateExpression `**` *ExponentiationExpression*

1. Return invalid.

12.6.3 Runtime Semantics: Evaluation

ExponentiationExpression **:** *UpdateExpression* `**` *ExponentiationExpression*

1. Let *left* be the result of evaluating *UpdateExpression*.
2. Let *leftValue* be ? GetValue(*left*).
3. Let *right* be the result of evaluating *ExponentiationExpression*.
4. Let *rightValue* be ? GetValue(*right*).
5. Let *base* be ? ToNumeric(*leftValue*).
6. Let *exponent* be ? ToNumeric(*rightValue*).
7. If Type(*base*) is different from Type(*exponent*), throw a **TypeError** exception.
8. Return ? Type(*base*)::exponentiate(*base*, *exponent*).

12.7 Multiplicative Operators

Syntax

MultiplicativeExpression`[Yield, Await]` **:**
ExponentiationExpression`[?Yield, ?Await]`
MultiplicativeExpression`[?Yield, ?Await]` *MultiplicativeOperator* *ExponentiationExpression*`[?Yield, ?Await]`

MultiplicativeOperator **: one of**
`* / %`

12.7.1 Static Semantics: IsFunctionDefinition

MultiplicativeExpression **:** *MultiplicativeExpression* *MultiplicativeOperator* *ExponentiationExpression*

1. Return **false**.

12.7.2 Static Semantics: AssignmentTargetType

MultiplicativeExpression **:** *MultiplicativeExpression* *MultiplicativeOperator* *ExponentiationExpression*

1. Return invalid.

12.7.3 Runtime Semantics: Evaluation

MultiplicativeExpression **:** *MultiplicativeExpression* *MultiplicativeOperator* *ExponentiationExpression*

1. Let *left* be the result of evaluating *MultiplicativeExpression*.
2. Let *leftValue* be ? GetValue(*left*).
3. Let *right* be the result of evaluating *ExponentiationExpression*.
4. Let *rightValue* be ? GetValue(*right*).
5. Let *lnum* be ? ToNumeric(*leftValue*).

6. Let *rnum* be ? ToNumeric(*rightValue*).
7. If Type(*lnum*) is different from Type(*rnum*), throw a **TypeError** exception.
8. Let *T* be Type(*lnum*).
9. If *MultiplicativeOperator* is *****, return *T*::multiply(*lnum*, *rnum*).
10. If *MultiplicativeOperator* is **/**, return *T*::divide(*lnum*, *rnum*).
11. Else,
    a. Assert: *MultiplicativeOperator* is **%**.
    b. Return *T*::remainder(*lnum*, *rnum*).

12.8 Additive Operators

Syntax

AdditiveExpression[Yield, Await] :
    MultiplicativeExpression[?Yield, ?Await]
    AdditiveExpression[?Yield, ?Await] + *MultiplicativeExpression*[?Yield, ?Await]
    AdditiveExpression[?Yield, ?Await] - *MultiplicativeExpression*[?Yield, ?Await]

12.8.1 Static Semantics: IsFunctionDefinition

AdditiveExpression :
    AdditiveExpression + *MultiplicativeExpression*
    AdditiveExpression - *MultiplicativeExpression*

1. Return **false**.

12.8.2 Static Semantics: AssignmentTargetType

AdditiveExpression :
    AdditiveExpression + *MultiplicativeExpression*
    AdditiveExpression - *MultiplicativeExpression*

1. Return invalid.

12.8.3 The Addition Operator (+)

NOTE The addition operator either performs string concatenation or numeric addition.

12.8.3.1 Runtime Semantics: Evaluation

AdditiveExpression : *AdditiveExpression* + *MultiplicativeExpression*

1. Let *lref* be the result of evaluating *AdditiveExpression*.
2. Let *lval* be ? GetValue(*lref*).
3. Let *rref* be the result of evaluating *MultiplicativeExpression*.
4. Let *rval* be ? GetValue(*rref*).
5. Let *lprim* be ? ToPrimitive(*lval*).
6. Let *rprim* be ? ToPrimitive(*rval*).

7. If Type(*lprim*) is String or Type(*rprim*) is String, then
    a. Let *lstr* be ? ToString(*lprim*).
    b. Let *rstr* be ? ToString(*rprim*).
    c. Return the string-concatenation of *lstr* and *rstr*.
8. Let *lnum* be ? ToNumeric(*lprim*).
9. Let *rnum* be ? ToNumeric(*rprim*).
10. If Type(*lnum*) is different from Type(*rnum*), throw a **TypeError** exception.
11. Let *T* be Type(*lnum*).
12. Return *T*::add(*lnum*, *rnum*).

NOTE 1 No hint is provided in the calls to ToPrimitive in steps 5 and 6. All standard objects except Date objects handle the absence of a hint as if the hint Number were given; Date objects handle the absence of a hint as if the hint String were given. Exotic objects may handle the absence of a hint in some other manner.

NOTE 2 Step 7 differs from step 3 of the Abstract Relational Comparison algorithm, by using the logical-or operation instead of the logical-and operation.

12.8.4 The Subtraction Operator (–)

12.8.4.1 Runtime Semantics: Evaluation

AdditiveExpression : *AdditiveExpression* - *MultiplicativeExpression*

1. Let *lref* be the result of evaluating *AdditiveExpression*.
2. Let *lval* be ? GetValue(*lref*).
3. Let *rref* be the result of evaluating *MultiplicativeExpression*.
4. Let *rval* be ? GetValue(*rref*).
5. Let *lnum* be ? ToNumeric(*lval*).
6. Let *rnum* be ? ToNumeric(*rval*).
7. If Type(*lnum*) is different from Type(*rnum*), throw a **TypeError** exception.
8. Let *T* be Type(*lnum*).
9. Return *T*::subtract(*lnum*, *rnum*).

12.9 Bitwise Shift Operators

Syntax

ShiftExpression[Yield, Await] :
    AdditiveExpression[?Yield, ?Await]
    ShiftExpression[?Yield, ?Await] << *AdditiveExpression*[?Yield, ?Await]
    ShiftExpression[?Yield, ?Await] >> *AdditiveExpression*[?Yield, ?Await]
    ShiftExpression[?Yield, ?Await] >>> *AdditiveExpression*[?Yield, ?Await]

12.9.1 Static Semantics: IsFunctionDefinition

ShiftExpression :
ShiftExpression << *AdditiveExpression*
ShiftExpression >> *AdditiveExpression*
ShiftExpression >>> *AdditiveExpression*

1. Return **false**.

12.9.2 Static Semantics: AssignmentTargetType

ShiftExpression :
ShiftExpression << *AdditiveExpression*
ShiftExpression >> *AdditiveExpression*
ShiftExpression >>> *AdditiveExpression*

1. Return invalid.

12.9.3 The Left Shift Operator (<<)

NOTE Performs a bitwise left shift operation on the left operand by the amount specified by the right operand.

12.9.3.1 Runtime Semantics: Evaluation

ShiftExpression : *ShiftExpression* << *AdditiveExpression*

1. Let *lref* be the result of evaluating *ShiftExpression*.
2. Let *lval* be ? GetValue(*lref*).
3. Let *rref* be the result of evaluating *AdditiveExpression*.
4. Let *rval* be ? GetValue(*rref*).
5. Let *lnum* be ? ToNumeric(*lval*).
6. Let *rnum* be ? ToNumeric(*rval*).
7. If Type(*lnum*) is different from Type(*rnum*), throw a **TypeError** exception.
8. Let *T* be Type(*lnum*).
9. Return *T*::leftShift(*lnum*, *rnum*).

12.9.4 The Signed Right Shift Operator (>>)

NOTE Performs a sign-filling bitwise right shift operation on the left operand by the amount specified by the right operand.

12.9.4.1 Runtime Semantics: Evaluation

ShiftExpression : *ShiftExpression* >> *AdditiveExpression*

1. Let *lref* be the result of evaluating *ShiftExpression*.
2. Let *lval* be ? GetValue(*lref*).
3. Let *rref* be the result of evaluating *AdditiveExpression*.
4. Let *rval* be ? GetValue(*rref*).

5. Let *lnum* be ? ToNumeric(*lval*).
6. Let *rnum* be ? ToNumeric(*rval*).
7. If Type(*lnum*) is different from Type(*rnum*), throw a **TypeError** exception.
8. Let *T* be Type(*lnum*).
9. Return *T*::signedRightShift(*lnum*, *rnum*).

12.9.5 The Unsigned Right Shift Operator (>>>)

NOTE Performs a zero-filling bitwise right shift operation on the left operand by the amount specified by the right operand.

12.9.5.1 Runtime Semantics: Evaluation

ShiftExpression : *ShiftExpression* `>>>` *AdditiveExpression*

1. Let *lref* be the result of evaluating *ShiftExpression*.
2. Let *lval* be ? GetValue(*lref*).
3. Let *rref* be the result of evaluating *AdditiveExpression*.
4. Let *rval* be ? GetValue(*rref*).
5. Let *lnum* be ? ToNumeric(*lval*).
6. Let *rnum* be ? ToNumeric(*rval*).
7. If Type(*lnum*) is different from Type(*rnum*), throw a **TypeError** exception.
8. Let *T* be Type(*lnum*).
9. Return *T*::unsignedRightShift(*lnum*, *rnum*).

12.10 Relational Operators

NOTE 1 The result of evaluating a relational operator is always of type Boolean, reflecting whether the relationship named by the operator holds between its two operands.

Syntax

RelationalExpression[In, Yield, Await] :
- *ShiftExpression*[?Yield, ?Await]
- *RelationalExpression*[?In, ?Yield, ?Await] `<` *ShiftExpression*[?Yield, ?Await]
- *RelationalExpression*[?In, ?Yield, ?Await] `>` *ShiftExpression*[?Yield, ?Await]
- *RelationalExpression*[?In, ?Yield, ?Await] `<=` *ShiftExpression*[?Yield, ?Await]
- *RelationalExpression*[?In, ?Yield, ?Await] `>=` *ShiftExpression*[?Yield, ?Await]
- *RelationalExpression*[?In, ?Yield, ?Await] **`instanceof`** *ShiftExpression*[?Yield, ?Await]
- [+In] *RelationalExpression*[+In, ?Yield, ?Await] **`in`** *ShiftExpression*[?Yield, ?Await]

NOTE 2 The [In] grammar parameter is needed to avoid confusing the **`in`** operator in a relational expression with the **`in`** operator in a **`for`** statement.

12.10.1 Static Semantics: IsFunctionDefinition

RelationalExpression **:**

RelationalExpression `<` *ShiftExpression*
RelationalExpression `>` *ShiftExpression*
RelationalExpression `<=` *ShiftExpression*
RelationalExpression `>=` *ShiftExpression*
RelationalExpression `instanceof` *ShiftExpression*
RelationalExpression `in` *ShiftExpression*

1. Return **false**.

12.10.2 Static Semantics: AssignmentTargetType

RelationalExpression **:**

RelationalExpression `<` *ShiftExpression*
RelationalExpression `>` *ShiftExpression*
RelationalExpression `<=` *ShiftExpression*
RelationalExpression `>=` *ShiftExpression*
RelationalExpression `instanceof` *ShiftExpression*
RelationalExpression `in` *ShiftExpression*

1. Return invalid.

12.10.3 Runtime Semantics: Evaluation

RelationalExpression **:** *RelationalExpression* `<` *ShiftExpression*

1. Let *lref* be the result of evaluating *RelationalExpression*.
2. Let *lval* be ? GetValue(*lref*).
3. Let *rref* be the result of evaluating *ShiftExpression*.
4. Let *rval* be ? GetValue(*rref*).
5. Let *r* be the result of performing Abstract Relational Comparison *lval* < *rval*.
6. ReturnIfAbrupt(*r*).
7. If *r* is **undefined**, return **false**. Otherwise, return *r*.

RelationalExpression **:** *RelationalExpression* `>` *ShiftExpression*

1. Let *lref* be the result of evaluating *RelationalExpression*.
2. Let *lval* be ? GetValue(*lref*).
3. Let *rref* be the result of evaluating *ShiftExpression*.
4. Let *rval* be ? GetValue(*rref*).
5. Let *r* be the result of performing Abstract Relational Comparison *rval* < *lval* with *LeftFirst* equal to **false**.
6. ReturnIfAbrupt(*r*).
7. If *r* is **undefined**, return **false**. Otherwise, return *r*.

RelationalExpression **:** *RelationalExpression* `<=` *ShiftExpression*

1. Let *lref* be the result of evaluating *RelationalExpression*.
2. Let *lval* be ? GetValue(*lref*).
3. Let *rref* be the result of evaluating *ShiftExpression*.
4. Let *rval* be ? GetValue(*rref*).

5. Let *r* be the result of performing Abstract Relational Comparison *rval* < *lval* with *LeftFirst* equal to **false**.
6. ReturnIfAbrupt(*r*).
7. If *r* is **true** or **undefined**, return **false**. Otherwise, return **true**.

RelationalExpression `:` *RelationalExpression* `>=` *ShiftExpression*

1. Let *lref* be the result of evaluating *RelationalExpression*.
2. Let *lval* be ? GetValue(*lref*).
3. Let *rref* be the result of evaluating *ShiftExpression*.
4. Let *rval* be ? GetValue(*rref*).
5. Let *r* be the result of performing Abstract Relational Comparison *lval* < *rval*.
6. ReturnIfAbrupt(*r*).
7. If *r* is **true** or **undefined**, return **false**. Otherwise, return **true**.

RelationalExpression `:` *RelationalExpression* `instanceof` *ShiftExpression*

1. Let *lref* be the result of evaluating *RelationalExpression*.
2. Let *lval* be ? GetValue(*lref*).
3. Let *rref* be the result of evaluating *ShiftExpression*.
4. Let *rval* be ? GetValue(*rref*).
5. Return ? InstanceofOperator(*lval*, *rval*).

RelationalExpression `:` *RelationalExpression* `in` *ShiftExpression*

1. Let *lref* be the result of evaluating *RelationalExpression*.
2. Let *lval* be ? GetValue(*lref*).
3. Let *rref* be the result of evaluating *ShiftExpression*.
4. Let *rval* be ? GetValue(*rref*).
5. If Type(*rval*) is not Object, throw a **TypeError** exception.
6. Return ? HasProperty(*rval*, ? ToPropertyKey(*lval*)).

12.10.4 Runtime Semantics: InstanceofOperator (*V*, *target*)

The abstract operation InstanceofOperator(*V*, *target*) implements the generic algorithm for determining if ECMAScript value *V* is an instance of object *target* either by consulting *target*'s @@hasInstance method or, if absent, determining whether the value of *target*'s **"prototype"** property is present in *V*'s prototype chain. This abstract operation performs the following steps:

1. If Type(*target*) is not Object, throw a **TypeError** exception.
2. Let *instOfHandler* be ? GetMethod(*target*, @@hasInstance).
3. If *instOfHandler* is not **undefined**, then
   a. Return ! ToBoolean(? Call(*instOfHandler*, *target*, « *V* »)).
4. If IsCallable(*target*) is **false**, throw a **TypeError** exception.
5. Return ? OrdinaryHasInstance(*target*, *V*).

NOTE Steps 4 and 5 provide compatibility with previous editions of ECMAScript that did not use a @@hasInstance method to define the `instanceof` operator semantics. If an object does not define or inherit @@hasInstance it uses the default `instanceof` semantics.

12.11 Equality Operators

NOTE The result of evaluating an equality operator is always of type Boolean, reflecting whether the relationship named by the operator holds between its two operands.

Syntax

EqualityExpression[In, Yield, Await] :
- *RelationalExpression*[?In, ?Yield, ?Await]
- *EqualityExpression*[?In, ?Yield, ?Await] `==` *RelationalExpression*[?In, ?Yield, ?Await]
- *EqualityExpression*[?In, ?Yield, ?Await] `!=` *RelationalExpression*[?In, ?Yield, ?Await]
- *EqualityExpression*[?In, ?Yield, ?Await] `===` *RelationalExpression*[?In, ?Yield, ?Await]
- *EqualityExpression*[?In, ?Yield, ?Await] `!==` *RelationalExpression*[?In, ?Yield, ?Await]

12.11.1 Static Semantics: IsFunctionDefinition

EqualityExpression :
- *EqualityExpression* `==` *RelationalExpression*
- *EqualityExpression* `!=` *RelationalExpression*
- *EqualityExpression* `===` *RelationalExpression*
- *EqualityExpression* `!==` *RelationalExpression*

1. Return **false**.

12.11.2 Static Semantics: AssignmentTargetType

EqualityExpression :
- *EqualityExpression* `==` *RelationalExpression*
- *EqualityExpression* `!=` *RelationalExpression*
- *EqualityExpression* `===` *RelationalExpression*
- *EqualityExpression* `!==` *RelationalExpression*

1. Return invalid.

12.11.3 Runtime Semantics: Evaluation

EqualityExpression : *EqualityExpression* `==` *RelationalExpression*

1. Let *lref* be the result of evaluating *EqualityExpression*.
2. Let *lval* be ? GetValue(*lref*).
3. Let *rref* be the result of evaluating *RelationalExpression*.
4. Let *rval* be ? GetValue(*rref*).
5. Return the result of performing Abstract Equality Comparison *rval* == *lval*.

EqualityExpression : *EqualityExpression* `!=` *RelationalExpression*

1. Let *lref* be the result of evaluating *EqualityExpression*.
2. Let *lval* be ? GetValue(*lref*).
3. Let *rref* be the result of evaluating *RelationalExpression*.
4. Let *rval* be ? GetValue(*rref*).

5. Let *r* be the result of performing Abstract Equality Comparison *rval* == *lval*.
6. ReturnIfAbrupt(*r*).
7. If *r* is **true**, return **false**. Otherwise, return **true**.

EqualityExpression **:** *EqualityExpression* **===** *RelationalExpression*

1. Let *lref* be the result of evaluating *EqualityExpression*.
2. Let *lval* be ? GetValue(*lref*).
3. Let *rref* be the result of evaluating *RelationalExpression*.
4. Let *rval* be ? GetValue(*rref*).
5. Return the result of performing Strict Equality Comparison *rval* === *lval*.

EqualityExpression **:** *EqualityExpression* **!==** *RelationalExpression*

1. Let *lref* be the result of evaluating *EqualityExpression*.
2. Let *lval* be ? GetValue(*lref*).
3. Let *rref* be the result of evaluating *RelationalExpression*.
4. Let *rval* be ? GetValue(*rref*).
5. Let *r* be the result of performing Strict Equality Comparison *rval* === *lval*.
6. Assert: *r* is a normal completion.
7. If *r*.[[Value]] is **true**, return **false**. Otherwise, return **true**.

NOTE 1 Given the above definition of equality:

- String comparison can be forced by: **`${a}` == `${b}`**.
- Numeric comparison can be forced by: **+a == +b**.
- Boolean comparison can be forced by: **!a == !b**.

NOTE 2 The equality operators maintain the following invariants:

- **A != B** is equivalent to **!(A == B)**.
- **A == B** is equivalent to **B == A**, except in the order of evaluation of **A** and **B**.

NOTE 3 The equality operator is not always transitive. For example, there might be two distinct String objects, each representing the same String value; each String object would be considered equal to the String value by the **==** operator, but the two String objects would not be equal to each other. For example:

- **new String("a") == "a"** and **"a" == new String("a")** are both **true**.
- **new String("a") == new String("a")** is **false**.

NOTE 4 Comparison of Strings uses a simple equality test on sequences of code unit values. There is no attempt to use the more complex, semantically oriented definitions of character or string equality and collating order defined in the Unicode specification. Therefore Strings values that are canonically equal according to the Unicode standard could test as unequal. In effect this algorithm assumes that both Strings are already in normalized form.

12.12 Binary Bitwise Operators

Syntax

BitwiseANDExpression[In, Yield, Await] :
  EqualityExpression[?In, ?Yield, ?Await]
  BitwiseANDExpression[?In, ?Yield, ?Await] & *EqualityExpression*[?In, ?Yield, ?Await]

BitwiseXORExpression[In, Yield, Await] :
  BitwiseANDExpression[?In, ?Yield, ?Await]
  BitwiseXORExpression[?In, ?Yield, ?Await] ^ *BitwiseANDExpression*[?In, ?Yield, ?Await]

BitwiseORExpression[In, Yield, Await] :
  BitwiseXORExpression[?In, ?Yield, ?Await]
  BitwiseORExpression[?In, ?Yield, ?Await] | *BitwiseXORExpression*[?In, ?Yield, ?Await]

12.12.1 Static Semantics: IsFunctionDefinition

BitwiseANDExpression : *BitwiseANDExpression* & *EqualityExpression*
BitwiseXORExpression : *BitwiseXORExpression* ^ *BitwiseANDExpression*
BitwiseORExpression : *BitwiseORExpression* | *BitwiseXORExpression*

1. Return **false**.

12.12.2 Static Semantics: AssignmentTargetType

BitwiseANDExpression : *BitwiseANDExpression* & *EqualityExpression*
BitwiseXORExpression : *BitwiseXORExpression* ^ *BitwiseANDExpression*
BitwiseORExpression : *BitwiseORExpression* | *BitwiseXORExpression*

1. Return invalid.

12.12.3 Runtime Semantics: Evaluation

The production *A* : *A* @ *B* , where @ is one of the bitwise operators in the productions above, is evaluated as follows:

1. Let *lref* be the result of evaluating *A*.
2. Let *lval* be ? GetValue(*lref*).
3. Let *rref* be the result of evaluating *B*.
4. Let *rval* be ? GetValue(*rref*).

5. Let *lnum* be ? ToNumeric(*lval*).
6. Let *rnum* be ? ToNumeric(*rval*).
7. If Type(*lnum*) is different from Type(*rnum*), throw a **TypeError** exception.
8. Let *T* be Type(*lnum*).
9. If @ is **&**, return *T*::bitwiseAND(*lnum*, *rnum*).
10. If @ is **|**, return *T*::bitwiseOR(*lnum*, *rnum*).
11. Else,
    a. Assert: @ is **^**.
    b. Return *T*::bitwiseXOR(*lnum*, *rnum*).

12.13 Binary Logical Operators

Syntax

LogicalANDExpression`[In, Yield, Await]` **:**
  BitwiseORExpression`[?In, ?Yield, ?Await]`
  LogicalANDExpression`[?In, ?Yield, ?Await]` **&&** *BitwiseORExpression*`[?In, ?Yield, ?Await]`

LogicalORExpression`[In, Yield, Await]` **:**
  LogicalANDExpression`[?In, ?Yield, ?Await]`
  LogicalORExpression`[?In, ?Yield, ?Await]` **||** *LogicalANDExpression*`[?In, ?Yield, ?Await]`

CoalesceExpression`[In, Yield, Await]` **:**
  CoalesceExpressionHead`[?In, ?Yield, ?Await]` **??** *BitwiseORExpression*`[?In, ?Yield, ?Await]`

CoalesceExpressionHead`[In, Yield, Await]` **:**
  CoalesceExpression`[?In, ?Yield, ?Await]`
  BitwiseORExpression`[?In, ?Yield, ?Await]`

ShortCircuitExpression`[In, Yield, Await]` **:**
  LogicalORExpression`[?In, ?Yield, ?Await]`
  CoalesceExpression`[?In, ?Yield, ?Await]`

NOTE The value produced by a **&&** or **||** operator is not necessarily of type Boolean. The value produced will always be the value of one of the two operand expressions.

12.13.1 Static Semantics: IsFunctionDefinition

LogicalANDExpression **:** *LogicalANDExpression* **&&** *BitwiseORExpression*
LogicalORExpression **:** *LogicalORExpression* **||** *LogicalANDExpression*
CoalesceExpression **:** *CoalesceExpressionHead* **??** *BitwiseORExpression*

1. Return **false**.

12.13.2 Static Semantics: AssignmentTargetType

LogicalANDExpression **:** *LogicalANDExpression* **&&** *BitwiseORExpression*

LogicalORExpression : *LogicalORExpression* `||` *LogicalANDExpression*
CoalesceExpression : *CoalesceExpressionHead* `??` *BitwiseORExpression*

1. Return invalid.

12.13.3 Runtime Semantics: Evaluation

LogicalANDExpression : *LogicalANDExpression* `&&` *BitwiseORExpression*

1. Let *lref* be the result of evaluating *LogicalANDExpression*.
2. Let *lval* be ? GetValue(*lref*).
3. Let *lbool* be ! ToBoolean(*lval*).
4. If *lbool* is **false**, return *lval*.
5. Let *rref* be the result of evaluating *BitwiseORExpression*.
6. Return ? GetValue(*rref*).

LogicalORExpression : *LogicalORExpression* `||` *LogicalANDExpression*

1. Let *lref* be the result of evaluating *LogicalORExpression*.
2. Let *lval* be ? GetValue(*lref*).
3. Let *lbool* be ! ToBoolean(*lval*).
4. If *lbool* is **true**, return *lval*.
5. Let *rref* be the result of evaluating *LogicalANDExpression*.
6. Return ? GetValue(*rref*).

CoalesceExpression : *CoalesceExpressionHead* `??` *BitwiseORExpression*

1. Let *lref* be the result of evaluating *CoalesceExpressionHead*.
2. Let *lval* be ? GetValue(*lref*).
3. If *lval* is **undefined** or **null**, then
   a. Let *rref* be the result of evaluating *BitwiseORExpression*.
   b. Return ? GetValue(*rref*).
4. Otherwise, return *lval*.

12.14 Conditional Operator (? :)

Syntax

ConditionalExpression`[In, Yield, Await]` :
ShortCircuitExpression`[?In, ?Yield, ?Await]`
ShortCircuitExpression`[?In, ?Yield, ?Await]` `?` *AssignmentExpression*`[+In, ?Yield, ?Await]` `:`
AssignmentExpression`[?In, ?Yield, ?Await]`

NOTE The grammar for a *ConditionalExpression* in ECMAScript is slightly different from that in C and Java, which each allow the second subexpression to be an *Expression* but restrict the third expression to be a *ConditionalExpression*. The motivation for this difference in ECMAScript is to allow an assignment expression to be governed by either arm of a conditional and to eliminate the confusing and fairly useless case of a comma expression as the centre expression.

12.14.1 Static Semantics: IsFunctionDefinition

ConditionalExpression : *ShortCircuitExpression* ? *AssignmentExpression* : *AssignmentExpression*

1. Return **false**.

12.14.2 Static Semantics: AssignmentTargetType

ConditionalExpression : *ShortCircuitExpression* ? *AssignmentExpression* : *AssignmentExpression*

1. Return invalid.

12.14.3 Runtime Semantics: Evaluation

ConditionalExpression : *ShortCircuitExpression* ? *AssignmentExpression* : *AssignmentExpression*

1. Let *lref* be the result of evaluating *ShortCircuitExpression*.
2. Let *lval* be ! ToBoolean(? GetValue(*lref*)).
3. If *lval* is **true**, then
   a. Let *trueRef* be the result of evaluating the first *AssignmentExpression*.
   b. Return ? GetValue(*trueRef*).
4. Else,
   a. Let *falseRef* be the result of evaluating the second *AssignmentExpression*.
   b. Return ? GetValue(*falseRef*).

12.15 Assignment Operators

Syntax

AssignmentExpression[In, Yield, Await] :
  ConditionalExpression[?In, ?Yield, ?Await]
  [+Yield] *YieldExpression*[?In, ?Await]
  ArrowFunction[?In, ?Yield, ?Await]
  AsyncArrowFunction[?In, ?Yield, ?Await]
  LeftHandSideExpression[?Yield, ?Await] = *AssignmentExpression*[?In, ?Yield, ?Await]
  LeftHandSideExpression[?Yield, ?Await] *AssignmentOperator* *AssignmentExpression*[?In, ?Yield, ?Await]

AssignmentOperator : **one of**
  `*= /= %= += -= <<= >>= >>>= &= ^= |= **=`

12.15.1 Static Semantics: Early Errors

AssignmentExpression : *LeftHandSideExpression* = *AssignmentExpression*

If *LeftHandSideExpression* is an *ObjectLiteral* or an *ArrayLiteral*, the following Early Error rules are applied:

- It is a Syntax Error if *LeftHandSideExpression* is not covering an *AssignmentPattern*.
- All Early Error rules for *AssignmentPattern* and its derived productions also apply to the *AssignmentPattern* that is covered by *LeftHandSideExpression*.

If *LeftHandSideExpression* is neither an *ObjectLiteral* nor an *ArrayLiteral*, the following Early Error rule is applied:

- It is a Syntax Error if AssignmentTargetType of *LeftHandSideExpression* is not simple.

AssignmentExpression : *LeftHandSideExpression* *AssignmentOperator* *AssignmentExpression*

- It is a Syntax Error if AssignmentTargetType of *LeftHandSideExpression* is not simple.

12.15.2 Static Semantics: IsFunctionDefinition

AssignmentExpression :
  ArrowFunction
  AsyncArrowFunction

1. Return **true**.

AssignmentExpression :
  YieldExpression
  LeftHandSideExpression = *AssignmentExpression*
  LeftHandSideExpression *AssignmentOperator* *AssignmentExpression*

1. Return **false**.

12.15.3 Static Semantics: AssignmentTargetType

AssignmentExpression :
  YieldExpression
  ArrowFunction
  AsyncArrowFunction
  LeftHandSideExpression = *AssignmentExpression*
  LeftHandSideExpression *AssignmentOperator* *AssignmentExpression*

1. Return invalid.

12.15.4 Runtime Semantics: Evaluation

AssignmentExpression : *LeftHandSideExpression* = *AssignmentExpression*

1. If *LeftHandSideExpression* is neither an *ObjectLiteral* nor an *ArrayLiteral*, then
   a. Let *lref* be the result of evaluating *LeftHandSideExpression*.
   b. ReturnIfAbrupt(*lref*).
   c. If IsAnonymousFunctionDefinition(*AssignmentExpression*) and IsIdentifierRef of *LeftHandSideExpression* are both **true**, then
      i. Let *rval* be NamedEvaluation of *AssignmentExpression* with argument GetReferencedName(*lref*).
   d. Else,
      i. Let *rref* be the result of evaluating *AssignmentExpression*.
      ii. Let *rval* be ? GetValue(*rref*).
   e. Perform ? PutValue(*lref*, *rval*).
   f. Return *rval*.
2. Let *assignmentPattern* be the *AssignmentPattern* that is covered by *LeftHandSideExpression*.
3. Let *rref* be the result of evaluating *AssignmentExpression*.
4. Let *rval* be ? GetValue(*rref*).
5. Perform ? DestructuringAssignmentEvaluation of *assignmentPattern* using *rval* as the argument.

6. Return *rval*.

AssignmentExpression : *LeftHandSideExpression* *AssignmentOperator* *AssignmentExpression*

1. Let *lref* be the result of evaluating *LeftHandSideExpression*.
2. Let *lval* be ? GetValue(*lref*).
3. Let *rref* be the result of evaluating *AssignmentExpression*.
4. Let *rval* be ? GetValue(*rref*).
5. Let *op* be the **@** where *AssignmentOperator* is **@=**.
6. Let *r* be the result of applying *op* to *lval* and *rval* as if evaluating the expression *lval op rval*.
7. Perform ? PutValue(*lref*, *r*).
8. Return *r*.

NOTE When an assignment occurs within strict mode code, it is a runtime error if *lref* in step 1.e of the first algorithm or step 7 of the second algorithm is an unresolvable reference. If it is, a **ReferenceError** exception is thrown. The *LeftHandSideExpression* also may not be a reference to a data property with the attribute value { [[Writable]]: **false** }, to an accessor property with the attribute value { [[Set]]: **undefined** }, nor to a non-existent property of an object for which the IsExtensible predicate returns the value **false**. In these cases a **TypeError** exception is thrown.

12.15.5 Destructuring Assignment

Supplemental Syntax

In certain circumstances when processing an instance of the production *AssignmentExpression* : *LeftHandSideExpression* **=** *AssignmentExpression* the following grammar is used to refine the interpretation of *LeftHandSideExpression*.

AssignmentPattern[Yield, Await] :
  ObjectAssignmentPattern[?Yield, ?Await]
  ArrayAssignmentPattern[?Yield, ?Await]

ObjectAssignmentPattern[Yield, Await] :
  { }
  { *AssignmentRestProperty*[?Yield, ?Await] **}**
  { *AssignmentPropertyList*[?Yield, ?Await] **}**
  { *AssignmentPropertyList*[?Yield, ?Await] **,** *AssignmentRestProperty*[?Yield, ?Await]$_{opt}$ **}**

ArrayAssignmentPattern[Yield, Await] :
  [*Elision*$_{opt}$ *AssignmentRestElement*[?Yield, ?Await]$_{opt}$ **]**
  [*AssignmentElementList*[?Yield, ?Await] **]**
  [*AssignmentElementList*[?Yield, ?Await] **,** *Elision*$_{opt}$ *AssignmentRestElement*[?Yield, ?Await]$_{opt}$ **]**

AssignmentRestProperty[Yield, Await] :
  ... *DestructuringAssignmentTarget*[?Yield, ?Await]

AssignmentPropertyList[Yield, Await] :
  AssignmentProperty[?Yield, ?Await]

AssignmentPropertyList[?Yield, ?Await] , *AssignmentProperty*[?Yield, ?Await]

AssignmentElementList[Yield, Await] :
AssignmentElisionElement[?Yield, ?Await]
AssignmentElementList[?Yield, ?Await] , *AssignmentElisionElement*[?Yield, ?Await]

AssignmentElisionElement[Yield, Await] :
Elision$_{opt}$ *AssignmentElement*[?Yield, ?Await]

AssignmentProperty[Yield, Await] :
IdentifierReference[?Yield, ?Await] *Initializer*[+In, ?Yield, ?Await] opt
PropertyName[?Yield, ?Await] : *AssignmentElement*[?Yield, ?Await]

AssignmentElement[Yield, Await] :
DestructuringAssignmentTarget[?Yield, ?Await] *Initializer*[+In, ?Yield, ?Await] opt

AssignmentRestElement[Yield, Await] :
... *DestructuringAssignmentTarget*[?Yield, ?Await]

DestructuringAssignmentTarget[Yield, Await] :
LeftHandSideExpression[?Yield, ?Await]

12.15.5.1 Static Semantics: Early Errors

AssignmentProperty : *IdentifierReference* *Initializer*$_{opt}$

- It is a Syntax Error if AssignmentTargetType of *IdentifierReference* is not simple.

AssignmentRestProperty : ... *DestructuringAssignmentTarget*

- It is a Syntax Error if *DestructuringAssignmentTarget* is an *ArrayLiteral* or an *ObjectLiteral*.

DestructuringAssignmentTarget : *LeftHandSideExpression*

If *LeftHandSideExpression* is an *ObjectLiteral* or an *ArrayLiteral*, the following Early Error rules are applied:

- It is a Syntax Error if *LeftHandSideExpression* is not covering an *AssignmentPattern*.
- All Early Error rules for *AssignmentPattern* and its derived productions also apply to the *AssignmentPattern* that is covered by *LeftHandSideExpression*.

If *LeftHandSideExpression* is neither an *ObjectLiteral* nor an *ArrayLiteral*, the following Early Error rule is applied:

- It is a Syntax Error if AssignmentTargetType of *LeftHandSideExpression* is not simple.

12.15.5.2 Runtime Semantics: DestructuringAssignmentEvaluation

With parameter *value*.

ObjectAssignmentPattern : { }

1. Perform ? RequireObjectCoercible(*value*).
2. Return NormalCompletion(empty).

ObjectAssignmentPattern :

{ *AssignmentPropertyList* }

{ *AssignmentPropertyList* , }

1. Perform ? RequireObjectCoercible(*value*).
2. Perform ? PropertyDestructuringAssignmentEvaluation for *AssignmentPropertyList* using *value* as the argument.
3. Return NormalCompletion(empty).

ArrayAssignmentPattern : [ ]

1. Let *iteratorRecord* be ? GetIterator(*value*).
2. Return ? IteratorClose(*iteratorRecord*, NormalCompletion(empty)).

ArrayAssignmentPattern : [*Elision*]

1. Let *iteratorRecord* be ? GetIterator(*value*).
2. Let *result* be IteratorDestructuringAssignmentEvaluation of *Elision* with argument *iteratorRecord*.
3. If *iteratorRecord*.[[Done]] is **false**, return ? IteratorClose(*iteratorRecord*, *result*).
4. Return *result*.

ArrayAssignmentPattern : [*Elision*$_{opt}$ *AssignmentRestElement*]

1. Let *iteratorRecord* be ? GetIterator(*value*).
2. If *Elision* is present, then
   a. Let *status* be IteratorDestructuringAssignmentEvaluation of *Elision* with argument *iteratorRecord*.
   b. If *status* is an abrupt completion, then
      i. Assert: *iteratorRecord*.[[Done]] is **true**.
      ii. Return Completion(*status*).
3. Let *result* be IteratorDestructuringAssignmentEvaluation of *AssignmentRestElement* with argument *iteratorRecord*.
4. If *iteratorRecord*.[[Done]] is **false**, return ? IteratorClose(*iteratorRecord*, *result*).
5. Return *result*.

ArrayAssignmentPattern : [*AssignmentElementList*]

1. Let *iteratorRecord* be ? GetIterator(*value*).
2. Let *result* be IteratorDestructuringAssignmentEvaluation of *AssignmentElementList* with argument *iteratorRecord*.
3. If *iteratorRecord*.[[Done]] is **false**, return ? IteratorClose(*iteratorRecord*, *result*).
4. Return *result*.

ArrayAssignmentPattern : [*AssignmentElementList* , *Elision*$_{opt}$ *AssignmentRestElement*$_{opt}$]

1. Let *iteratorRecord* be ? GetIterator(*value*).
2. Let *status* be IteratorDestructuringAssignmentEvaluation of *AssignmentElementList* with argument *iteratorRecord*.
3. If *status* is an abrupt completion, then
   a. If *iteratorRecord*.[[Done]] is **false**, return ? IteratorClose(*iteratorRecord*, *status*).
   b. Return Completion(*status*).
4. If *Elision* is present, then

a. Set *status* to the result of performing IteratorDestructuringAssignmentEvaluation of *Elision* with *iteratorRecord* as the argument.
b. If *status* is an abrupt completion, then
i. Assert: *iteratorRecord*.[[Done]] is **true**.
ii. Return Completion(*status*).
5. If *AssignmentRestElement* is present, then
a. Set *status* to the result of performing IteratorDestructuringAssignmentEvaluation of *AssignmentRestElement* with *iteratorRecord* as the argument.
6. If *iteratorRecord*.[[Done]] is **false**, return ? IteratorClose(*iteratorRecord*, *status*).
7. Return Completion(*status*).

ObjectAssignmentPattern : `{` *AssignmentRestProperty* `}`

1. Perform ? RequireObjectCoercible(*value*).
2. Let *excludedNames* be a new empty List.
3. Return the result of performing RestDestructuringAssignmentEvaluation of *AssignmentRestProperty* with *value* and *excludedNames* as the arguments.

ObjectAssignmentPattern : `{` *AssignmentPropertyList* `,` *AssignmentRestProperty* `}`

1. Perform ? RequireObjectCoercible(*value*).
2. Let *excludedNames* be ? PropertyDestructuringAssignmentEvaluation of *AssignmentPropertyList* with argument *value*.
3. Return the result of performing RestDestructuringAssignmentEvaluation of *AssignmentRestProperty* with arguments *value* and *excludedNames*.

12.15.5.3 Runtime Semantics: PropertyDestructuringAssignmentEvaluation

With parameter *value*.

NOTE The following operations collect a list of all destructured property names.

AssignmentPropertyList : *AssignmentPropertyList* `,` *AssignmentProperty*

1. Let *propertyNames* be ? PropertyDestructuringAssignmentEvaluation of *AssignmentPropertyList* with argument *value*.
2. Let *nextNames* be ? PropertyDestructuringAssignmentEvaluation of *AssignmentProperty* with argument *value*.
3. Append each item in *nextNames* to the end of *propertyNames*.
4. Return *propertyNames*.

AssignmentProperty : *IdentifierReference* $Initializer_{opt}$

1. Let *P* be StringValue of *IdentifierReference*.
2. Let *lref* be ? ResolveBinding(*P*).
3. Let *v* be ? GetV(*value*, *P*).
4. If $Initializer_{opt}$ is present and *v* is **undefined**, then
a. If IsAnonymousFunctionDefinition(*Initializer*) is **true**, then
i. Set *v* to the result of performing NamedEvaluation for *Initializer* with argument *P*.
b. Else,
i. Let *defaultValue* be the result of evaluating *Initializer*.

ii. Set *v* to ? GetValue(*defaultValue*).

5. Perform ? PutValue(*lref*, *v*).
6. Return a new List containing *P*.

AssignmentProperty : *PropertyName* : *AssignmentElement*

1. Let *name* be the result of evaluating *PropertyName*.
2. ReturnIfAbrupt(*name*).
3. Perform ? KeyedDestructuringAssignmentEvaluation of *AssignmentElement* with *value* and *name* as the arguments.
4. Return a new List containing *name*.

12.15.5.4 Runtime Semantics: RestDestructuringAssignmentEvaluation

With parameters *value* and *excludedNames*.

AssignmentRestProperty : ... *DestructuringAssignmentTarget*

1. Let *lref* be the result of evaluating *DestructuringAssignmentTarget*.
2. ReturnIfAbrupt(*lref*).
3. Let *restObj* be OrdinaryObjectCreate(%Object.prototype%).
4. Perform ? CopyDataProperties(*restObj*, *value*, *excludedNames*).
5. Return PutValue(*lref*, *restObj*).

12.15.5.5 Runtime Semantics: IteratorDestructuringAssignmentEvaluation

With parameter *iteratorRecord*.

AssignmentElementList : *AssignmentElisionElement*

1. Return the result of performing IteratorDestructuringAssignmentEvaluation of *AssignmentElisionElement* using *iteratorRecord* as the argument.

AssignmentElementList : *AssignmentElementList* , *AssignmentElisionElement*

1. Perform ? IteratorDestructuringAssignmentEvaluation of *AssignmentElementList* using *iteratorRecord* as the argument.
2. Return the result of performing IteratorDestructuringAssignmentEvaluation of *AssignmentElisionElement* using *iteratorRecord* as the argument.

AssignmentElisionElement : *AssignmentElement*

1. Return the result of performing IteratorDestructuringAssignmentEvaluation of *AssignmentElement* with *iteratorRecord* as the argument.

AssignmentElisionElement : *Elision* *AssignmentElement*

1. Perform ? IteratorDestructuringAssignmentEvaluation of *Elision* with *iteratorRecord* as the argument.
2. Return the result of performing IteratorDestructuringAssignmentEvaluation of *AssignmentElement* with *iteratorRecord* as the argument.

Elision : ,

1. If *iteratorRecord*.[[Done]] is **false**, then
    a. Let *next* be IteratorStep(*iteratorRecord*).
    b. If *next* is an abrupt completion, set *iteratorRecord*.[[Done]] to **true**.
    c. ReturnIfAbrupt(*next*).
    d. If *next* is **false**, set *iteratorRecord*.[[Done]] to **true**.
2. Return NormalCompletion(empty).

Elision : *Elision* ,

1. Perform ? IteratorDestructuringAssignmentEvaluation of *Elision* with *iteratorRecord* as the argument.
2. If *iteratorRecord*.[[Done]] is **false**, then
    a. Let *next* be IteratorStep(*iteratorRecord*).
    b. If *next* is an abrupt completion, set *iteratorRecord*.[[Done]] to **true**.
    c. ReturnIfAbrupt(*next*).
    d. If *next* is **false**, set *iteratorRecord*.[[Done]] to **true**.
3. Return NormalCompletion(empty).

AssignmentElement : *DestructuringAssignmentTarget* *Initializer*$_{opt}$

1. If *DestructuringAssignmentTarget* is neither an *ObjectLiteral* nor an *ArrayLiteral*, then
    a. Let *lref* be the result of evaluating *DestructuringAssignmentTarget*.
    b. ReturnIfAbrupt(*lref*).
2. If *iteratorRecord*.[[Done]] is **false**, then
    a. Let *next* be IteratorStep(*iteratorRecord*).
    b. If *next* is an abrupt completion, set *iteratorRecord*.[[Done]] to **true**.
    c. ReturnIfAbrupt(*next*).
    d. If *next* is **false**, set *iteratorRecord*.[[Done]] to **true**.
    e. Else,
        i. Let *value* be IteratorValue(*next*).
        ii. If *value* is an abrupt completion, set *iteratorRecord*.[[Done]] to **true**.
        iii. ReturnIfAbrupt(*value*).
3. If *iteratorRecord*.[[Done]] is **true**, let *value* be **undefined**.
4. If *Initializer* is present and *value* is **undefined**, then
    a. If IsAnonymousFunctionDefinition(*Initializer*) and IsIdentifierRef of *DestructuringAssignmentTarget* are both **true**, then
        i. Let *v* be NamedEvaluation of *Initializer* with argument GetReferencedName(*lref*).
    b. Else,
        i. Let *defaultValue* be the result of evaluating *Initializer*.
        ii. Let *v* be ? GetValue(*defaultValue*).
5. Else, let *v* be *value*.
6. If *DestructuringAssignmentTarget* is an *ObjectLiteral* or an *ArrayLiteral*, then
    a. Let *nestedAssignmentPattern* be the *AssignmentPattern* that is covered by *DestructuringAssignmentTarget*.
    b. Return the result of performing DestructuringAssignmentEvaluation of *nestedAssignmentPattern* with *v* as the argument.
7. Return ? PutValue(*lref*, *v*).

NOTE Left to right evaluation order is maintained by evaluating a *DestructuringAssignmentTarget* that is not a destructuring pattern prior to accessing the iterator or evaluating the *Initializer*.

AssignmentRestElement : ... *DestructuringAssignmentTarget*

1. If *DestructuringAssignmentTarget* is neither an *ObjectLiteral* nor an *ArrayLiteral*, then
    a. Let *lref* be the result of evaluating *DestructuringAssignmentTarget*.
    b. ReturnIfAbrupt(*lref*).
2. Let *A* be ! ArrayCreate(0).
3. Let *n* be 0.
4. Repeat, while *iteratorRecord*.[[Done]] is **false**,
    a. Let *next* be IteratorStep(*iteratorRecord*).
    b. If *next* is an abrupt completion, set *iteratorRecord*.[[Done]] to **true**.
    c. ReturnIfAbrupt(*next*).
    d. If *next* is **false**, set *iteratorRecord*.[[Done]] to **true**.
    e. Else,
        i. Let *nextValue* be IteratorValue(*next*).
        ii. If *nextValue* is an abrupt completion, set *iteratorRecord*.[[Done]] to **true**.
        iii. ReturnIfAbrupt(*nextValue*).
        iv. Perform ! CreateDataPropertyOrThrow(*A*, ! ToString(*n*), *nextValue*).
        v. Set *n* to *n* + 1.
5. If *DestructuringAssignmentTarget* is neither an *ObjectLiteral* nor an *ArrayLiteral*, then
    a. Return ? PutValue(*lref*, *A*).
6. Let *nestedAssignmentPattern* be the *AssignmentPattern* that is covered by *DestructuringAssignmentTarget*.
7. Return the result of performing DestructuringAssignmentEvaluation of *nestedAssignmentPattern* with *A* as the argument.

12.15.5.6 Runtime Semantics: KeyedDestructuringAssignmentEvaluation

With parameters *value* and *propertyName*.

AssignmentElement : *DestructuringAssignmentTarget* *Initializer*$_{opt}$

1. If *DestructuringAssignmentTarget* is neither an *ObjectLiteral* nor an *ArrayLiteral*, then
    a. Let *lref* be the result of evaluating *DestructuringAssignmentTarget*.
    b. ReturnIfAbrupt(*lref*).
2. Let *v* be ? GetV(*value*, *propertyName*).
3. If *Initializer* is present and *v* is **undefined**, then
    a. If IsAnonymousFunctionDefinition(*Initializer*) and IsIdentifierRef of *DestructuringAssignmentTarget* are both **true**, then
        i. Let *rhsValue* be NamedEvaluation of *Initializer* with argument GetReferencedName(*lref*).
    b. Else,
        i. Let *defaultValue* be the result of evaluating *Initializer*.
        ii. Let *rhsValue* be ? GetValue(*defaultValue*).
4. Else, let *rhsValue* be *v*.
5. If *DestructuringAssignmentTarget* is an *ObjectLiteral* or an *ArrayLiteral*, then
    a. Let *assignmentPattern* be the *AssignmentPattern* that is covered by *DestructuringAssignmentTarget*.
    b. Return the result of performing DestructuringAssignmentEvaluation of *assignmentPattern* with *rhsValue* as the argument.
6. Return ? PutValue(*lref*, *rhsValue*).

12.16 Comma Operator (,)

Syntax

Expression[In, Yield, Await] :
AssignmentExpression[?In, ?Yield, ?Await]
Expression[?In, ?Yield, ?Await] , *AssignmentExpression*[?In, ?Yield, ?Await]

12.16.1 Static Semantics: IsFunctionDefinition

Expression : *Expression* , *AssignmentExpression*

1. Return **false**.

12.16.2 Static Semantics: AssignmentTargetType

Expression : *Expression* , *AssignmentExpression*

1. Return invalid.

12.16.3 Runtime Semantics: Evaluation

Expression : *Expression* , *AssignmentExpression*

1. Let *lref* be the result of evaluating *Expression*.
2. Perform ? GetValue(*lref*).
3. Let *rref* be the result of evaluating *AssignmentExpression*.
4. Return ? GetValue(*rref*).

NOTE GetValue must be called even though its value is not used because it may have observable side-effects.

13 ECMAScript Language: Statements and Declarations

Syntax

Statement[Yield, Await, Return] :
BlockStatement[?Yield, ?Await, ?Return]
VariableStatement[?Yield, ?Await]
EmptyStatement
ExpressionStatement[?Yield, ?Await]
IfStatement[?Yield, ?Await, ?Return]
BreakableStatement[?Yield, ?Await, ?Return]
ContinueStatement[?Yield, ?Await]
BreakStatement[?Yield, ?Await]
[+Return] *ReturnStatement*[?Yield, ?Await]

WithStatement[?Yield, ?Await, ?Return]
LabelledStatement[?Yield, ?Await, ?Return]
ThrowStatement[?Yield, ?Await]
TryStatement[?Yield, ?Await, ?Return]
DebuggerStatement

Declaration[Yield, Await] :
HoistableDeclaration[?Yield, ?Await, ~Default]
ClassDeclaration[?Yield, ?Await, ~Default]
LexicalDeclaration[+In, ?Yield, ?Await]

HoistableDeclaration[Yield, Await, Default] :
FunctionDeclaration[?Yield, ?Await, ?Default]
GeneratorDeclaration[?Yield, ?Await, ?Default]
AsyncFunctionDeclaration[?Yield, ?Await, ?Default]
AsyncGeneratorDeclaration[?Yield, ?Await, ?Default]

BreakableStatement[Yield, Await, Return] :
IterationStatement[?Yield, ?Await, ?Return]
SwitchStatement[?Yield, ?Await, ?Return]

13.1 Statement Semantics

13.1.1 Static Semantics: ContainsDuplicateLabels

With parameter *labelSet*.

Statement :
VariableStatement
EmptyStatement
ExpressionStatement
ContinueStatement
BreakStatement
ReturnStatement
ThrowStatement
DebuggerStatement

1. Return **false**.

13.1.2 Static Semantics: ContainsUndefinedBreakTarget

With parameter *labelSet*.

Statement :
VariableStatement
EmptyStatement
ExpressionStatement

ContinueStatement
ReturnStatement
ThrowStatement
DebuggerStatement

1. Return **false**.

13.1.3 Static Semantics: ContainsUndefinedContinueTarget

With parameters *iterationSet* and *labelSet*.

Statement **:**
VariableStatement
EmptyStatement
ExpressionStatement
BreakStatement
ReturnStatement
ThrowStatement
DebuggerStatement

1. Return **false**.

BreakableStatement **:** *IterationStatement*

1. Let *newIterationSet* be a copy of *iterationSet* with all the elements of *labelSet* appended.
2. Return ContainsUndefinedContinueTarget of *IterationStatement* with arguments *newIterationSet* and « ».

13.1.4 Static Semantics: DeclarationPart

HoistableDeclaration **:** *FunctionDeclaration*

1. Return *FunctionDeclaration*.

HoistableDeclaration **:** *GeneratorDeclaration*

1. Return *GeneratorDeclaration*.

HoistableDeclaration **:** *AsyncFunctionDeclaration*

1. Return *AsyncFunctionDeclaration*.

HoistableDeclaration **:** *AsyncGeneratorDeclaration*

1. Return *AsyncGeneratorDeclaration*.

Declaration **:** *ClassDeclaration*

1. Return *ClassDeclaration*.

Declaration **:** *LexicalDeclaration*

1. Return *LexicalDeclaration*.

13.1.5 Static Semantics: VarDeclaredNames

Statement **:**

EmptyStatement
ExpressionStatement
ContinueStatement
BreakStatement
ReturnStatement
ThrowStatement
DebuggerStatement

1. Return a new empty List.

13.1.6 Static Semantics: VarScopedDeclarations

Statement **:**

EmptyStatement
ExpressionStatement
ContinueStatement
BreakStatement
ReturnStatement
ThrowStatement
DebuggerStatement

1. Return a new empty List.

13.1.7 Runtime Semantics: LabelledEvaluation

With parameter *labelSet*.

BreakableStatement **:** *IterationStatement*

1. Let *stmtResult* be LabelledEvaluation of *IterationStatement* with argument *labelSet*.
2. If *stmtResult*.[[Type]] is break, then
   a. If *stmtResult*.[[Target]] is empty, then
      i. If *stmtResult*.[[Value]] is empty, set *stmtResult* to NormalCompletion(**undefined**).
      ii. Else, set *stmtResult* to NormalCompletion(*stmtResult*.[[Value]]).
3. Return Completion(*stmtResult*).

BreakableStatement **:** *SwitchStatement*

1. Let *stmtResult* be the result of evaluating *SwitchStatement*.
2. If *stmtResult*.[[Type]] is break, then
   a. If *stmtResult*.[[Target]] is empty, then
      i. If *stmtResult*.[[Value]] is empty, set *stmtResult* to NormalCompletion(**undefined**).
      ii. Else, set *stmtResult* to NormalCompletion(*stmtResult*.[[Value]]).
3. Return Completion(*stmtResult*).

NOTE A *BreakableStatement* is one that can be exited via an unlabelled *BreakStatement*.

13.1.8 Runtime Semantics: Evaluation

HoistableDeclaration :
GeneratorDeclaration
AsyncFunctionDeclaration
AsyncGeneratorDeclaration

1. Return NormalCompletion(empty).

HoistableDeclaration : *FunctionDeclaration*

1. Return the result of evaluating *FunctionDeclaration*.

BreakableStatement :
IterationStatement
SwitchStatement

1. Let *newLabelSet* be a new empty List.
2. Return the result of performing LabelledEvaluation of this *BreakableStatement* with argument *newLabelSet*.

13.2 Block

Syntax

BlockStatement[Yield, Await, Return] :
Block[?Yield, ?Await, ?Return]

Block[Yield, Await, Return] :
{ *StatementList*[?Yield, ?Await, ?Return] opt }

StatementList[Yield, Await, Return] :
StatementListItem[?Yield, ?Await, ?Return]
StatementList[?Yield, ?Await, ?Return] *StatementListItem*[?Yield, ?Await, ?Return]

StatementListItem[Yield, Await, Return] :
Statement[?Yield, ?Await, ?Return]
Declaration[?Yield, ?Await]

13.2.1 Static Semantics: Early Errors

Block : { *StatementList* }

- It is a Syntax Error if the LexicallyDeclaredNames of *StatementList* contains any duplicate entries.
- It is a Syntax Error if any element of the LexicallyDeclaredNames of *StatementList* also occurs in the VarDeclaredNames of *StatementList*.

13.2.2 Static Semantics: ContainsDuplicateLabels

With parameter *labelSet*.

Block : { }

1. Return **false**.

StatementList **:** *StatementList* *StatementListItem*

1. Let *hasDuplicates* be ContainsDuplicateLabels of *StatementList* with argument *labelSet*.
2. If *hasDuplicates* is **true**, return **true**.
3. Return ContainsDuplicateLabels of *StatementListItem* with argument *labelSet*.

StatementListItem **:** *Declaration*

1. Return **false**.

13.2.3 Static Semantics: ContainsUndefinedBreakTarget

With parameter *labelSet*.

Block **:** `{ }`

1. Return **false**.

StatementList **:** *StatementList* *StatementListItem*

1. Let *hasUndefinedLabels* be ContainsUndefinedBreakTarget of *StatementList* with argument *labelSet*.
2. If *hasUndefinedLabels* is **true**, return **true**.
3. Return ContainsUndefinedBreakTarget of *StatementListItem* with argument *labelSet*.

StatementListItem **:** *Declaration*

1. Return **false**.

13.2.4 Static Semantics: ContainsUndefinedContinueTarget

With parameters *iterationSet* and *labelSet*.

Block **:** `{ }`

1. Return **false**.

StatementList **:** *StatementList* *StatementListItem*

1. Let *hasUndefinedLabels* be ContainsUndefinedContinueTarget of *StatementList* with arguments *iterationSet* and « ».
2. If *hasUndefinedLabels* is **true**, return **true**.
3. Return ContainsUndefinedContinueTarget of *StatementListItem* with arguments *iterationSet* and « ».

StatementListItem **:** *Declaration*

1. Return **false**.

13.2.5 Static Semantics: LexicallyDeclaredNames

Block **:** `{ }`

1. Return a new empty List.

StatementList : *StatementList* *StatementListItem*

1. Let *names* be LexicallyDeclaredNames of *StatementList*.
2. Append to *names* the elements of the LexicallyDeclaredNames of *StatementListItem*.
3. Return *names*.

StatementListItem : *Statement*

1. If *Statement* is *Statement* : *LabelledStatement* , return LexicallyDeclaredNames of *LabelledStatement*.
2. Return a new empty List.

StatementListItem : *Declaration*

1. Return the BoundNames of *Declaration*.

13.2.6 Static Semantics: LexicallyScopedDeclarations

StatementList : *StatementList* *StatementListItem*

1. Let *declarations* be LexicallyScopedDeclarations of *StatementList*.
2. Append to *declarations* the elements of the LexicallyScopedDeclarations of *StatementListItem*.
3. Return *declarations*.

StatementListItem : *Statement*

1. If *Statement* is *Statement* : *LabelledStatement* , return LexicallyScopedDeclarations of *LabelledStatement*.
2. Return a new empty List.

StatementListItem : *Declaration*

1. Return a new List containing DeclarationPart of *Declaration*.

13.2.7 Static Semantics: TopLevelLexicallyDeclaredNames

StatementList : *StatementList* *StatementListItem*

1. Let *names* be TopLevelLexicallyDeclaredNames of *StatementList*.
2. Append to *names* the elements of the TopLevelLexicallyDeclaredNames of *StatementListItem*.
3. Return *names*.

StatementListItem : *Statement*

1. Return a new empty List.

StatementListItem : *Declaration*

1. If *Declaration* is *Declaration* : *HoistableDeclaration* , then
    a. Return « ».
2. Return the BoundNames of *Declaration*.

NOTE At the top level of a function, or script, function declarations are treated like var declarations rather than like lexical declarations.

13.2.8 Static Semantics: TopLevelLexicallyScopedDeclarations

Block : `{ }`

1. Return a new empty List.

StatementList : *StatementList* *StatementListItem*

1. Let *declarations* be TopLevelLexicallyScopedDeclarations of *StatementList*.
2. Append to *declarations* the elements of the TopLevelLexicallyScopedDeclarations of *StatementListItem*.
3. Return *declarations*.

StatementListItem : *Statement*

1. Return a new empty List.

StatementListItem : *Declaration*

1. If *Declaration* is *Declaration* : *HoistableDeclaration* , then
   a. Return « ».
2. Return a new List containing *Declaration*.

13.2.9 Static Semantics: TopLevelVarDeclaredNames

Block : `{ }`

1. Return a new empty List.

StatementList : *StatementList* *StatementListItem*

1. Let *names* be TopLevelVarDeclaredNames of *StatementList*.
2. Append to *names* the elements of the TopLevelVarDeclaredNames of *StatementListItem*.
3. Return *names*.

StatementListItem : *Declaration*

1. If *Declaration* is *Declaration* : *HoistableDeclaration* , then
   a. Return the BoundNames of *HoistableDeclaration*.
2. Return a new empty List.

StatementListItem : *Statement*

1. If *Statement* is *Statement* : *LabelledStatement* , return TopLevelVarDeclaredNames of *Statement*.
2. Return VarDeclaredNames of *Statement*.

NOTE At the top level of a function or script, inner function declarations are treated like var declarations.

13.2.10 Static Semantics: TopLevelVarScopedDeclarations

Block : `{ }`

1. Return a new empty List.

StatementList : *StatementList* *StatementListItem*

1. Let *declarations* be TopLevelVarScopedDeclarations of *StatementList*.
2. Append to *declarations* the elements of the TopLevelVarScopedDeclarations of *StatementListItem*.
3. Return *declarations*.

StatementListItem : *Statement*

1. If *Statement* is *Statement* : *LabelledStatement* , return TopLevelVarScopedDeclarations of *Statement*.
2. Return VarScopedDeclarations of *Statement*.

StatementListItem : *Declaration*

1. If *Declaration* is *Declaration* : *HoistableDeclaration* , then
   a. Let *declaration* be DeclarationPart of *HoistableDeclaration*.
   b. Return « *declaration* ».
2. Return a new empty List.

13.2.11 Static Semantics: VarDeclaredNames

Block : `{ }`

1. Return a new empty List.

StatementList : *StatementList* *StatementListItem*

1. Let *names* be VarDeclaredNames of *StatementList*.
2. Append to *names* the elements of the VarDeclaredNames of *StatementListItem*.
3. Return *names*.

StatementListItem : *Declaration*

1. Return a new empty List.

13.2.12 Static Semantics: VarScopedDeclarations

Block : `{ }`

1. Return a new empty List.

StatementList : *StatementList* *StatementListItem*

1. Let *declarations* be VarScopedDeclarations of *StatementList*.
2. Append to *declarations* the elements of the VarScopedDeclarations of *StatementListItem*.
3. Return *declarations*.

StatementListItem : *Declaration*

1. Return a new empty List.

13.2.13 Runtime Semantics: Evaluation

Block : `{ }`

1. Return NormalCompletion(empty).

Block : `{` *StatementList* `}`

1. Let *oldEnv* be the running execution context's LexicalEnvironment.
2. Let *blockEnv* be NewDeclarativeEnvironment(*oldEnv*).
3. Perform BlockDeclarationInstantiation(*StatementList*, *blockEnv*).
4. Set the running execution context's LexicalEnvironment to *blockEnv*.
5. Let *blockValue* be the result of evaluating *StatementList*.
6. Set the running execution context's LexicalEnvironment to *oldEnv*.
7. Return *blockValue*.

NOTE 1 No matter how control leaves the *Block* the LexicalEnvironment is always restored to its former state.

StatementList : *StatementList* *StatementListItem*

1. Let *sl* be the result of evaluating *StatementList*.
2. ReturnIfAbrupt(*sl*).
3. Let *s* be the result of evaluating *StatementListItem*.
4. Return Completion(UpdateEmpty(*s*, *sl*)).

NOTE 2 The value of a *StatementList* is the value of the last value-producing item in the *StatementList*. For example, the following calls to the **`eval`** function all return the value 1:

```
eval("1;;;;;")
eval("1;{}")
eval("1;var a;")
```

13.2.14 Runtime Semantics: BlockDeclarationInstantiation (*code*, *env*)

NOTE When a *Block* or *CaseBlock* is evaluated a new declarative Environment Record is created and bindings for each block scoped variable, constant, function, or class declared in the block are instantiated in the Environment Record.

BlockDeclarationInstantiation is performed as follows using arguments *code* and *env*. *code* is the Parse Node corresponding to the body of the block. *env* is the Lexical Environment in which bindings are to be created.

1. Let *envRec* be *env*'s EnvironmentRecord.
2. Assert: *envRec* is a declarative Environment Record.
3. Let *declarations* be the LexicallyScopedDeclarations of *code*.
4. For each element *d* in *declarations*, do
    a. For each element *dn* of the BoundNames of *d*, do
        i. If IsConstantDeclaration of *d* is **true**, then

1. Perform ! *envRec*.CreateImmutableBinding(*dn*, **true**).

ii. Else,

1. Perform ! *envRec*.CreateMutableBinding(*dn*, **false**).

b. If *d* is a *FunctionDeclaration*, a *GeneratorDeclaration*, an *AsyncFunctionDeclaration*, or an *AsyncGeneratorDeclaration*, then

i. Let *fn* be the sole element of the BoundNames of *d*.

ii. Let *fo* be InstantiateFunctionObject of *d* with argument *env*.

iii. Perform *envRec*.InitializeBinding(*fn*, *fo*).

13.3 Declarations and the Variable Statement

13.3.1 Let and Const Declarations

NOTE **`let`** and **`const`** declarations define variables that are scoped to the running execution context's LexicalEnvironment. The variables are created when their containing Lexical Environment is instantiated but may not be accessed in any way until the variable's *LexicalBinding* is evaluated. A variable defined by a *LexicalBinding* with an *Initializer* is assigned the value of its *Initializer*'s *AssignmentExpression* when the *LexicalBinding* is evaluated, not when the variable is created. If a *LexicalBinding* in a **`let`** declaration does not have an *Initializer* the variable is assigned the value **undefined** when the *LexicalBinding* is evaluated.

Syntax

LexicalDeclaration[In, Yield, Await] :
  LetOrConst *BindingList*[?In, ?Yield, ?Await] ;

LetOrConst :
  `let`
  `const`

BindingList[In, Yield, Await] :
  LexicalBinding[?In, ?Yield, ?Await]
  BindingList[?In, ?Yield, ?Await] , *LexicalBinding*[?In, ?Yield, ?Await]

LexicalBinding[In, Yield, Await] :
  BindingIdentifier[?Yield, ?Await] *Initializer*[?In, ?Yield, ?Await] opt
  BindingPattern[?Yield, ?Await] *Initializer*[?In, ?Yield, ?Await]

13.3.1.1 Static Semantics: Early Errors

LexicalDeclaration : *LetOrConst* *BindingList* ;

- It is a Syntax Error if the BoundNames of *BindingList* contains **"let"**.
- It is a Syntax Error if the BoundNames of *BindingList* contains any duplicate entries.

LexicalBinding : *BindingIdentifier* *Initializer*opt

- It is a Syntax Error if *Initializer* is not present and IsConstantDeclaration of the *LexicalDeclaration* containing this

LexicalBinding is **true**.

13.3.1.2 Static Semantics: BoundNames

LexicalDeclaration : *LetOrConst* *BindingList* ;

1. Return the BoundNames of *BindingList*.

BindingList : *BindingList* , *LexicalBinding*

1. Let *names* be the BoundNames of *BindingList*.
2. Append to *names* the elements of the BoundNames of *LexicalBinding*.
3. Return *names*.

LexicalBinding : *BindingIdentifier* *Initializer*$_{opt}$

1. Return the BoundNames of *BindingIdentifier*.

LexicalBinding : *BindingPattern* *Initializer*

1. Return the BoundNames of *BindingPattern*.

13.3.1.3 Static Semantics: IsConstantDeclaration

LexicalDeclaration : *LetOrConst* *BindingList* ;

1. Return IsConstantDeclaration of *LetOrConst*.

LetOrConst : `let`

1. Return **false**.

LetOrConst : `const`

1. Return **true**.

13.3.1.4 Runtime Semantics: Evaluation

LexicalDeclaration : *LetOrConst* *BindingList* ;

1. Let *next* be the result of evaluating *BindingList*.
2. ReturnIfAbrupt(*next*).
3. Return NormalCompletion(empty).

BindingList : *BindingList* , *LexicalBinding*

1. Let *next* be the result of evaluating *BindingList*.
2. ReturnIfAbrupt(*next*).
3. Return the result of evaluating *LexicalBinding*.

LexicalBinding : *BindingIdentifier*

1. Let *lhs* be ResolveBinding(StringValue of *BindingIdentifier*).
2. Return InitializeReferencedBinding(*lhs*, **undefined**).

NOTE A static semantics rule ensures that this form of *LexicalBinding* never occurs in a **`const`** declaration.

LexicalBinding : *BindingIdentifier* *Initializer*

1. Let *bindingId* be StringValue of *BindingIdentifier*.
2. Let *lhs* be ResolveBinding(*bindingId*).
3. If IsAnonymousFunctionDefinition(*Initializer*) is **true**, then
   a. Let *value* be NamedEvaluation of *Initializer* with argument *bindingId*.
4. Else,
   a. Let *rhs* be the result of evaluating *Initializer*.
   b. Let *value* be ? GetValue(*rhs*).
5. Return InitializeReferencedBinding(*lhs*, *value*).

LexicalBinding : *BindingPattern* *Initializer*

1. Let *rhs* be the result of evaluating *Initializer*.
2. Let *value* be ? GetValue(*rhs*).
3. Let *env* be the running execution context's LexicalEnvironment.
4. Return the result of performing BindingInitialization for *BindingPattern* using *value* and *env* as the arguments.

13.3.2 Variable Statement

NOTE A **`var`** statement declares variables that are scoped to the running execution context's VariableEnvironment. Var variables are created when their containing Lexical Environment is instantiated and are initialized to **undefined** when created. Within the scope of any VariableEnvironment a common *BindingIdentifier* may appear in more than one *VariableDeclaration* but those declarations collectively define only one variable. A variable defined by a *VariableDeclaration* with an *Initializer* is assigned the value of its *Initializer*'s *AssignmentExpression* when the *VariableDeclaration* is executed, not when the variable is created.

Syntax

VariableStatement[Yield, Await] :
  var *VariableDeclarationList*[+In, ?Yield, ?Await] ;

VariableDeclarationList[In, Yield, Await] :
  VariableDeclaration[?In, ?Yield, ?Await]
  VariableDeclarationList[?In, ?Yield, ?Await] , *VariableDeclaration*[?In, ?Yield, ?Await]

VariableDeclaration[In, Yield, Await] :
  BindingIdentifier[?Yield, ?Await] *Initializer*[?In, ?Yield, ?Await] opt
  BindingPattern[?Yield, ?Await] *Initializer*[?In, ?Yield, ?Await]

13.3.2.1 Static Semantics: BoundNames

VariableDeclarationList : *VariableDeclarationList* , *VariableDeclaration*

1. Let *names* be BoundNames of *VariableDeclarationList*.
2. Append to *names* the elements of BoundNames of *VariableDeclaration*.
3. Return *names*.

VariableDeclaration : *BindingIdentifier* *Initializer*$_{\text{opt}}$

1. Return the BoundNames of *BindingIdentifier*.

VariableDeclaration : *BindingPattern* *Initializer*

1. Return the BoundNames of *BindingPattern*.

13.3.2.2 Static Semantics: VarDeclaredNames

VariableStatement : `var` *VariableDeclarationList* `;`

1. Return BoundNames of *VariableDeclarationList*.

13.3.2.3 Static Semantics: VarScopedDeclarations

VariableDeclarationList : *VariableDeclaration*

1. Return a new List containing *VariableDeclaration*.

VariableDeclarationList : *VariableDeclarationList* `,` *VariableDeclaration*

1. Let *declarations* be VarScopedDeclarations of *VariableDeclarationList*.
2. Append *VariableDeclaration* to *declarations*.
3. Return *declarations*.

13.3.2.4 Runtime Semantics: Evaluation

VariableStatement : `var` *VariableDeclarationList* `;`

1. Let *next* be the result of evaluating *VariableDeclarationList*.
2. ReturnIfAbrupt(*next*).
3. Return NormalCompletion(empty).

VariableDeclarationList : *VariableDeclarationList* `,` *VariableDeclaration*

1. Let *next* be the result of evaluating *VariableDeclarationList*.
2. ReturnIfAbrupt(*next*).
3. Return the result of evaluating *VariableDeclaration*.

VariableDeclaration : *BindingIdentifier*

1. Return NormalCompletion(empty).

VariableDeclaration : *BindingIdentifier* *Initializer*

1. Let *bindingId* be StringValue of *BindingIdentifier*.
2. Let *lhs* be ? ResolveBinding(*bindingId*).
3. If IsAnonymousFunctionDefinition(*Initializer*) is **true**, then
    a. Let *value* be NamedEvaluation of *Initializer* with argument *bindingId*.
4. Else,

a. Let *rhs* be the result of evaluating *Initializer*.
b. Let *value* be ? GetValue(*rhs*).

5. Return ? PutValue(*lhs*, *value*).

NOTE If a *VariableDeclaration* is nested within a with statement and the *BindingIdentifier* in the *VariableDeclaration* is the same as a property name of the binding object of the with statement's object Environment Record, then step 5 will assign *value* to the property instead of assigning to the VariableEnvironment binding of the *Identifier*.

VariableDeclaration : *BindingPattern* *Initializer*

1. Let *rhs* be the result of evaluating *Initializer*.
2. Let *rval* be ? GetValue(*rhs*).
3. Return the result of performing BindingInitialization for *BindingPattern* passing *rval* and **undefined** as arguments.

13.3.3 Destructuring Binding Patterns

Syntax

BindingPattern[Yield, Await] :
  ObjectBindingPattern[?Yield, ?Await]
  ArrayBindingPattern[?Yield, ?Await]

ObjectBindingPattern[Yield, Await] :
  { }
  { *BindingRestProperty*[?Yield, ?Await] }
  { *BindingPropertyList*[?Yield, ?Await] }
  { *BindingPropertyList*[?Yield, ?Await] , *BindingRestProperty*[?Yield, ?Await]opt }

ArrayBindingPattern[Yield, Await] :
  [*Elision*opt *BindingRestElement*[?Yield, ?Await]opt]
  [*BindingElementList*[?Yield, ?Await]]
  [*BindingElementList*[?Yield, ?Await] , *Elision*opt *BindingRestElement*[?Yield, ?Await]opt]

BindingRestProperty[Yield, Await] :
  ... *BindingIdentifier*[?Yield, ?Await]

BindingPropertyList[Yield, Await] :
  BindingProperty[?Yield, ?Await]
  BindingPropertyList[?Yield, ?Await] , *BindingProperty*[?Yield, ?Await]

BindingElementList[Yield, Await] :
  BindingElisionElement[?Yield, ?Await]
  BindingElementList[?Yield, ?Await] , *BindingElisionElement*[?Yield, ?Await]

BindingElisionElement[Yield, Await] :
  *Elision*opt *BindingElement*[?Yield, ?Await]

BindingProperty[Yield, Await] :
SingleNameBinding[?Yield, ?Await]
PropertyName[?Yield, ?Await] : *BindingElement*[?Yield, ?Await]

BindingElement[Yield, Await] :
SingleNameBinding[?Yield, ?Await]
BindingPattern[?Yield, ?Await] *Initializer*[+In, ?Yield, ?Await] opt

SingleNameBinding[Yield, Await] :
BindingIdentifier[?Yield, ?Await] *Initializer*[+In, ?Yield, ?Await] opt

BindingRestElement[Yield, Await] :
... *BindingIdentifier*[?Yield, ?Await]
... *BindingPattern*[?Yield, ?Await]

13.3.3.1 Static Semantics: BoundNames

ObjectBindingPattern : { }

1. Return a new empty List.

ObjectBindingPattern : { *BindingPropertyList* , *BindingRestProperty* }

1. Let *names* be BoundNames of *BindingPropertyList*.
2. Append to *names* the elements of BoundNames of *BindingRestProperty*.
3. Return *names*.

ArrayBindingPattern : [*Elision*$_{opt}$]

1. Return a new empty List.

ArrayBindingPattern : [*Elision*$_{opt}$ *BindingRestElement*]

1. Return the BoundNames of *BindingRestElement*.

ArrayBindingPattern : [*BindingElementList* , *Elision*$_{opt}$]

1. Return the BoundNames of *BindingElementList*.

ArrayBindingPattern : [*BindingElementList* , *Elision*$_{opt}$ *BindingRestElement*]

1. Let *names* be BoundNames of *BindingElementList*.
2. Append to *names* the elements of BoundNames of *BindingRestElement*.
3. Return *names*.

BindingPropertyList : *BindingPropertyList* , *BindingProperty*

1. Let *names* be BoundNames of *BindingPropertyList*.
2. Append to *names* the elements of BoundNames of *BindingProperty*.
3. Return *names*.

BindingElementList : *BindingElementList* , *BindingElisionElement*

1. Let *names* be BoundNames of *BindingElementList*.
2. Append to *names* the elements of BoundNames of *BindingElisionElement*.
3. Return *names*.

BindingElisionElement : *Elision*$_{opt}$ *BindingElement*

1. Return BoundNames of *BindingElement*.

BindingProperty : *PropertyName* : *BindingElement*

1. Return the BoundNames of *BindingElement*.

SingleNameBinding : *BindingIdentifier* *Initializer*$_{opt}$

1. Return the BoundNames of *BindingIdentifier*.

BindingElement : *BindingPattern* *Initializer*$_{opt}$

1. Return the BoundNames of *BindingPattern*.

13.3.3.2 Static Semantics: ContainsExpression

ObjectBindingPattern :

{ }
{ *BindingRestProperty* }

1. Return **false**.

ObjectBindingPattern : { *BindingPropertyList* , *BindingRestProperty* }

1. Return ContainsExpression of *BindingPropertyList*.

ArrayBindingPattern : [*Elision*$_{opt}$]

1. Return **false**.

ArrayBindingPattern : [*Elision*$_{opt}$ *BindingRestElement*]

1. Return ContainsExpression of *BindingRestElement*.

ArrayBindingPattern : [*BindingElementList* , *Elision*$_{opt}$]

1. Return ContainsExpression of *BindingElementList*.

ArrayBindingPattern : [*BindingElementList* , *Elision*$_{opt}$ *BindingRestElement*]

1. Let *has* be ContainsExpression of *BindingElementList*.
2. If *has* is **true**, return **true**.
3. Return ContainsExpression of *BindingRestElement*.

BindingPropertyList : *BindingPropertyList* , *BindingProperty*

1. Let *has* be ContainsExpression of *BindingPropertyList*.
2. If *has* is **true**, return **true**.
3. Return ContainsExpression of *BindingProperty*.

BindingElementList : *BindingElementList* , *BindingElisionElement*

1. Let *has* be ContainsExpression of *BindingElementList*.
2. If *has* is **true**, return **true**.
3. Return ContainsExpression of *BindingElisionElement*.

BindingElisionElement : *Elision*$_{\text{opt}}$ *BindingElement*

1. Return ContainsExpression of *BindingElement*.

BindingProperty : *PropertyName* : *BindingElement*

1. Let *has* be IsComputedPropertyKey of *PropertyName*.
2. If *has* is **true**, return **true**.
3. Return ContainsExpression of *BindingElement*.

BindingElement : *BindingPattern* *Initializer*

1. Return **true**.

SingleNameBinding : *BindingIdentifier*

1. Return **false**.

SingleNameBinding : *BindingIdentifier* *Initializer*

1. Return **true**.

BindingRestElement : ... *BindingIdentifier*

1. Return **false**.

BindingRestElement : ... *BindingPattern*

1. Return ContainsExpression of *BindingPattern*.

13.3.3.3 Static Semantics: HasInitializer

BindingElement : *BindingPattern*

1. Return **false**.

BindingElement : *BindingPattern* *Initializer*

1. Return **true**.

SingleNameBinding : *BindingIdentifier*

1. Return **false**.

SingleNameBinding : *BindingIdentifier* *Initializer*

1. Return **true**.

13.3.3.4 Static Semantics: IsSimpleParameterList

BindingElement : *BindingPattern*

1. Return **false**.

BindingElement : *BindingPattern* *Initializer*

1. Return **false**.

SingleNameBinding : *BindingIdentifier*

1. Return **true**.

SingleNameBinding : *BindingIdentifier* *Initializer*

1. Return **false**.

13.3.3.5 Runtime Semantics: BindingInitialization

With parameters *value* and *environment*.

> NOTE When **undefined** is passed for *environment* it indicates that a PutValue operation should be used to assign the initialization value. This is the case for formal parameter lists of non-strict functions. In that case the formal parameter bindings are preinitialized in order to deal with the possibility of multiple parameters with the same name.

BindingPattern : *ObjectBindingPattern*

1. Perform ? RequireObjectCoercible(*value*).
2. Return the result of performing BindingInitialization for *ObjectBindingPattern* using *value* and *environment* as arguments.

BindingPattern : *ArrayBindingPattern*

1. Let *iteratorRecord* be ? GetIterator(*value*).
2. Let *result* be IteratorBindingInitialization of *ArrayBindingPattern* with arguments *iteratorRecord* and *environment*.
3. If *iteratorRecord*.[[Done]] is **false**, return ? IteratorClose(*iteratorRecord*, *result*).
4. Return *result*.

ObjectBindingPattern : `{ }`

1. Return NormalCompletion(empty).

ObjectBindingPattern :
  `{` *BindingPropertyList* `}`
  `{` *BindingPropertyList* `, }`

1. Perform ? PropertyBindingInitialization for *BindingPropertyList* using *value* and *environment* as the arguments.
2. Return NormalCompletion(empty).

ObjectBindingPattern : `{` *BindingRestProperty* `}`

1. Let *excludedNames* be a new empty List.
2. Return the result of performing RestBindingInitialization of *BindingRestProperty* with *value*, *environment*, and

excludedNames as the arguments.

ObjectBindingPattern : { *BindingPropertyList* , *BindingRestProperty* }

1. Let *excludedNames* be ? PropertyBindingInitialization of *BindingPropertyList* with arguments *value* and *environment*.
2. Return the result of performing RestBindingInitialization of *BindingRestProperty* with arguments *value*, *environment*, and *excludedNames*.

13.3.3.6 Runtime Semantics: PropertyBindingInitialization

With parameters *value* and *environment*.

> NOTE These collect a list of all bound property names rather than just empty completion.

BindingPropertyList : *BindingPropertyList* , *BindingProperty*

1. Let *boundNames* be ? PropertyBindingInitialization of *BindingPropertyList* with arguments *value* and *environment*.
2. Let *nextNames* be ? PropertyBindingInitialization of *BindingProperty* with arguments *value* and *environment*.
3. Append each item in *nextNames* to the end of *boundNames*.
4. Return *boundNames*.

BindingProperty : *SingleNameBinding*

1. Let *name* be the string that is the only element of BoundNames of *SingleNameBinding*.
2. Perform ? KeyedBindingInitialization for *SingleNameBinding* using *value*, *environment*, and *name* as the arguments.
3. Return a new List containing *name*.

BindingProperty : *PropertyName* : *BindingElement*

1. Let *P* be the result of evaluating *PropertyName*.
2. ReturnIfAbrupt(*P*).
3. Perform ? KeyedBindingInitialization of *BindingElement* with *value*, *environment*, and *P* as the arguments.
4. Return a new List containing *P*.

13.3.3.7 Runtime Semantics: RestBindingInitialization

With parameters *value*, *environment*, and *excludedNames*.

BindingRestProperty : ... *BindingIdentifier*

1. Let *lhs* be ? ResolveBinding(StringValue of *BindingIdentifier*, *environment*).
2. Let *restObj* be OrdinaryObjectCreate(%Object.prototype%).
3. Perform ? CopyDataProperties(*restObj*, *value*, *excludedNames*).
4. If *environment* is **undefined**, return PutValue(*lhs*, *restObj*).
5. Return InitializeReferencedBinding(*lhs*, *restObj*).

13.3.3.8 Runtime Semantics: IteratorBindingInitialization

With parameters *iteratorRecord* and *environment*.

> NOTE When **undefined** is passed for *environment* it indicates that a PutValue operation should be used to assign the initialization value. This is the case for formal parameter lists of non-strict functions. In that case the formal parameter bindings are preinitialized in order to deal with the possibility of multiple parameters with the same name.

ArrayBindingPattern : [ ]

1. Return NormalCompletion(empty).

ArrayBindingPattern : [*Elision*]

1. Return the result of performing IteratorDestructuringAssignmentEvaluation of *Elision* with *iteratorRecord* as the argument.

ArrayBindingPattern : [$Elision_{opt}$ *BindingRestElement*]

1. If *Elision* is present, then
    a. Perform ? IteratorDestructuringAssignmentEvaluation of *Elision* with *iteratorRecord* as the argument.
2. Return the result of performing IteratorBindingInitialization for *BindingRestElement* with *iteratorRecord* and *environment* as arguments.

ArrayBindingPattern : [*BindingElementList*]

1. Return the result of performing IteratorBindingInitialization for *BindingElementList* with *iteratorRecord* and *environment* as arguments.

ArrayBindingPattern : [*BindingElementList* ,]

1. Return the result of performing IteratorBindingInitialization for *BindingElementList* with *iteratorRecord* and *environment* as arguments.

ArrayBindingPattern : [*BindingElementList* , *Elision*]

1. Perform ? IteratorBindingInitialization for *BindingElementList* with *iteratorRecord* and *environment* as arguments.
2. Return the result of performing IteratorDestructuringAssignmentEvaluation of *Elision* with *iteratorRecord* as the argument.

ArrayBindingPattern : [*BindingElementList* , $Elision_{opt}$ *BindingRestElement*]

1. Perform ? IteratorBindingInitialization for *BindingElementList* with *iteratorRecord* and *environment* as arguments.
2. If *Elision* is present, then
    a. Perform ? IteratorDestructuringAssignmentEvaluation of *Elision* with *iteratorRecord* as the argument.
3. Return the result of performing IteratorBindingInitialization for *BindingRestElement* with *iteratorRecord* and *environment* as arguments.

BindingElementList : *BindingElisionElement*

1. Return the result of performing IteratorBindingInitialization for *BindingElisionElement* with *iteratorRecord* and *environment* as arguments.

BindingElementList : *BindingElementList* , *BindingElisionElement*

1. Perform ? IteratorBindingInitialization for *BindingElementList* with *iteratorRecord* and *environment* as arguments.
2. Return the result of performing IteratorBindingInitialization for *BindingElisionElement* using *iteratorRecord* and *environment* as arguments.

BindingElisionElement : *BindingElement*

1. Return the result of performing IteratorBindingInitialization of *BindingElement* with *iteratorRecord* and *environment* as the arguments.

BindingElisionElement : *Elision* *BindingElement*

1. Perform ? IteratorDestructuringAssignmentEvaluation of *Elision* with *iteratorRecord* as the argument.
2. Return the result of performing IteratorBindingInitialization of *BindingElement* with *iteratorRecord* and *environment* as the arguments.

BindingElement : *SingleNameBinding*

1. Return the result of performing IteratorBindingInitialization for *SingleNameBinding* with *iteratorRecord* and *environment* as the arguments.

SingleNameBinding : *BindingIdentifier* *Initializer*$_{opt}$

1. Let *bindingId* be StringValue of *BindingIdentifier*.
2. Let *lhs* be ? ResolveBinding(*bindingId*, *environment*).
3. If *iteratorRecord*.[[Done]] is **false**, then
   a. Let *next* be IteratorStep(*iteratorRecord*).
   b. If *next* is an abrupt completion, set *iteratorRecord*.[[Done]] to **true**.
   c. ReturnIfAbrupt(*next*).
   d. If *next* is **false**, set *iteratorRecord*.[[Done]] to **true**.
   e. Else,
      i. Let *v* be IteratorValue(*next*).
      ii. If *v* is an abrupt completion, set *iteratorRecord*.[[Done]] to **true**.
      iii. ReturnIfAbrupt(*v*).
4. If *iteratorRecord*.[[Done]] is **true**, let *v* be **undefined**.
5. If *Initializer* is present and *v* is **undefined**, then
   a. If IsAnonymousFunctionDefinition(*Initializer*) is **true**, then
      i. Set *v* to the result of performing NamedEvaluation for *Initializer* with argument *bindingId*.
   b. Else,
      i. Let *defaultValue* be the result of evaluating *Initializer*.
      ii. Set *v* to ? GetValue(*defaultValue*).
6. If *environment* is **undefined**, return ? PutValue(*lhs*, *v*).
7. Return InitializeReferencedBinding(*lhs*, *v*).

BindingElement : *BindingPattern* *Initializer*$_{opt}$

1. If *iteratorRecord*.[[Done]] is **false**, then
   a. Let *next* be IteratorStep(*iteratorRecord*).
   b. If *next* is an abrupt completion, set *iteratorRecord*.[[Done]] to **true**.
   c. ReturnIfAbrupt(*next*).

d. If *next* is **false**, set *iteratorRecord*.[[Done]] to **true**.
e. Else,
i. Let *v* be IteratorValue(*next*).
ii. If *v* is an abrupt completion, set *iteratorRecord*.[[Done]] to **true**.
iii. ReturnIfAbrupt(*v*).
2. If *iteratorRecord*.[[Done]] is **true**, let *v* be **undefined**.
3. If *Initializer* is present and *v* is **undefined**, then
a. Let *defaultValue* be the result of evaluating *Initializer*.
b. Set *v* to ? GetValue(*defaultValue*).
4. Return the result of performing BindingInitialization of *BindingPattern* with *v* and *environment* as the arguments.

BindingRestElement : ... *BindingIdentifier*

1. Let *lhs* be ? ResolveBinding(StringValue of *BindingIdentifier*, *environment*).
2. Let *A* be ! ArrayCreate(0).
3. Let *n* be 0.
4. Repeat,
a. If *iteratorRecord*.[[Done]] is **false**, then
i. Let *next* be IteratorStep(*iteratorRecord*).
ii. If *next* is an abrupt completion, set *iteratorRecord*.[[Done]] to **true**.
iii. ReturnIfAbrupt(*next*).
iv. If *next* is **false**, set *iteratorRecord*.[[Done]] to **true**.
b. If *iteratorRecord*.[[Done]] is **true**, then
i. If *environment* is **undefined**, return ? PutValue(*lhs*, *A*).
ii. Return InitializeReferencedBinding(*lhs*, *A*).
c. Let *nextValue* be IteratorValue(*next*).
d. If *nextValue* is an abrupt completion, set *iteratorRecord*.[[Done]] to **true**.
e. ReturnIfAbrupt(*nextValue*).
f. Perform ! CreateDataPropertyOrThrow(*A*, ! ToString(*n*), *nextValue*).
g. Set *n* to *n* + 1.

BindingRestElement : ... *BindingPattern*

1. Let *A* be ! ArrayCreate(0).
2. Let *n* be 0.
3. Repeat,
a. If *iteratorRecord*.[[Done]] is **false**, then
i. Let *next* be IteratorStep(*iteratorRecord*).
ii. If *next* is an abrupt completion, set *iteratorRecord*.[[Done]] to **true**.
iii. ReturnIfAbrupt(*next*).
iv. If *next* is **false**, set *iteratorRecord*.[[Done]] to **true**.
b. If *iteratorRecord*.[[Done]] is **true**, then
i. Return the result of performing BindingInitialization of *BindingPattern* with *A* and *environment* as the arguments.
c. Let *nextValue* be IteratorValue(*next*).
d. If *nextValue* is an abrupt completion, set *iteratorRecord*.[[Done]] to **true**.
e. ReturnIfAbrupt(*nextValue*).
f. Perform ! CreateDataPropertyOrThrow(*A*, ! ToString(*n*), *nextValue*).

g. Set n to $n + 1$.

13.3.3.9 Runtime Semantics: KeyedBindingInitialization

With parameters *value*, *environment*, and *propertyName*.

> NOTE When **undefined** is passed for *environment* it indicates that a PutValue operation should be used to assign the initialization value. This is the case for formal parameter lists of non-strict functions. In that case the formal parameter bindings are preinitialized in order to deal with the possibility of multiple parameters with the same name.

BindingElement : *BindingPattern* *Initializer*$_{opt}$

1. Let v be ? GetV(*value*, *propertyName*).
2. If *Initializer* is present and v is **undefined**, then
   a. Let *defaultValue* be the result of evaluating *Initializer*.
   b. Set v to ? GetValue(*defaultValue*).
3. Return the result of performing BindingInitialization for *BindingPattern* passing v and *environment* as arguments.

SingleNameBinding : *BindingIdentifier* *Initializer*$_{opt}$

1. Let *bindingId* be StringValue of *BindingIdentifier*.
2. Let *lhs* be ? ResolveBinding(*bindingId*, *environment*).
3. Let v be ? GetV(*value*, *propertyName*).
4. If *Initializer* is present and v is **undefined**, then
   a. If IsAnonymousFunctionDefinition(*Initializer*) is **true**, then
      i. Set v to the result of performing NamedEvaluation for *Initializer* with argument *bindingId*.
   b. Else,
      i. Let *defaultValue* be the result of evaluating *Initializer*.
      ii. Set v to ? GetValue(*defaultValue*).
5. If *environment* is **undefined**, return ? PutValue(*lhs*, v).
6. Return InitializeReferencedBinding(*lhs*, v).

13.4 Empty Statement

Syntax

EmptyStatement :
`;`

13.4.1 Runtime Semantics: Evaluation

EmptyStatement : `;`

1. Return NormalCompletion(empty).

13.5 Expression Statement

Syntax

ExpressionStatement[Yield, Await] :
[lookahead ∉ { `{` , `function` , `async` [no *LineTerminator* here] `function` , `class` , `let` `[` }]
Expression[+In, ?Yield, ?Await] `;`

NOTE An *ExpressionStatement* cannot start with a U+007B (LEFT CURLY BRACKET) because that might make it ambiguous with a *Block*. An *ExpressionStatement* cannot start with the `function` or `class` keywords because that would make it ambiguous with a *FunctionDeclaration*, a *GeneratorDeclaration*, or a *ClassDeclaration*. An *ExpressionStatement* cannot start with `async function` because that would make it ambiguous with an *AsyncFunctionDeclaration* or a *AsyncGeneratorDeclaration*. An *ExpressionStatement* cannot start with the two token sequence `let [` because that would make it ambiguous with a `let` *LexicalDeclaration* whose first *LexicalBinding* was an *ArrayBindingPattern*.

13.5.1 Runtime Semantics: Evaluation

ExpressionStatement : *Expression* `;`

1. Let *exprRef* be the result of evaluating *Expression*.
2. Return ? GetValue(*exprRef*).

13.6 The `if` Statement

Syntax

IfStatement[Yield, Await, Return] :
`if` `(` *Expression*[+In, ?Yield, ?Await] `)` *Statement*[?Yield, ?Await, ?Return] `else` *Statement*[?Yield, ?Await, ?Return]
`if` `(` *Expression*[+In, ?Yield, ?Await] `)` *Statement*[?Yield, ?Await, ?Return]

Each `else` for which the choice of associated `if` is ambiguous shall be associated with the nearest possible `if` that would otherwise have no corresponding `else`.

13.6.1 Static Semantics: Early Errors

IfStatement :
`if` `(` *Expression* `)` *Statement* `else` *Statement*
`if` `(` *Expression* `)` *Statement*

- It is a Syntax Error if IsLabelledFunction(*Statement*) is **true**.

NOTE It is only necessary to apply this rule if the extension specified in B.3.2 is implemented.

13.6.2 Static Semantics: ContainsDuplicateLabels

With parameter *labelSet*.

IfStatement : `if` (*Expression*) *Statement* `else` *Statement*

1. Let *hasDuplicate* be ContainsDuplicateLabels of the first *Statement* with argument *labelSet*.
2. If *hasDuplicate* is **true**, return **true**.
3. Return ContainsDuplicateLabels of the second *Statement* with argument *labelSet*.

IfStatement : `if` (*Expression*) *Statement*

1. Return ContainsDuplicateLabels of *Statement* with argument *labelSet*.

13.6.3 Static Semantics: ContainsUndefinedBreakTarget

With parameter *labelSet*.

IfStatement : `if` (*Expression*) *Statement* `else` *Statement*

1. Let *hasUndefinedLabels* be ContainsUndefinedBreakTarget of the first *Statement* with argument *labelSet*.
2. If *hasUndefinedLabels* is **true**, return **true**.
3. Return ContainsUndefinedBreakTarget of the second *Statement* with argument *labelSet*.

IfStatement : `if` (*Expression*) *Statement*

1. Return ContainsUndefinedBreakTarget of *Statement* with argument *labelSet*.

13.6.4 Static Semantics: ContainsUndefinedContinueTarget

With parameters *iterationSet* and *labelSet*.

IfStatement : `if` (*Expression*) *Statement* `else` *Statement*

1. Let *hasUndefinedLabels* be ContainsUndefinedContinueTarget of the first *Statement* with arguments *iterationSet* and « ».
2. If *hasUndefinedLabels* is **true**, return **true**.
3. Return ContainsUndefinedContinueTarget of the second *Statement* with arguments *iterationSet* and « ».

IfStatement : `if` (*Expression*) *Statement*

1. Return ContainsUndefinedContinueTarget of *Statement* with arguments *iterationSet* and « ».

13.6.5 Static Semantics: VarDeclaredNames

IfStatement : `if` (*Expression*) *Statement* `else` *Statement*

1. Let *names* be VarDeclaredNames of the first *Statement*.
2. Append to *names* the elements of the VarDeclaredNames of the second *Statement*.
3. Return *names*.

IfStatement : `if` (*Expression*) *Statement*

1. Return the VarDeclaredNames of *Statement*.

13.6.6 Static Semantics: VarScopedDeclarations

IfStatement : `if` (*Expression*) *Statement* `else` *Statement*

1. Let *declarations* be VarScopedDeclarations of the first *Statement*.
2. Append to *declarations* the elements of the VarScopedDeclarations of the second *Statement*.
3. Return *declarations*.

IfStatement : `if` (*Expression*) *Statement*

1. Return the VarScopedDeclarations of *Statement*.

13.6.7 Runtime Semantics: Evaluation

IfStatement : `if` (*Expression*) *Statement* `else` *Statement*

1. Let *exprRef* be the result of evaluating *Expression*.
2. Let *exprValue* be ! ToBoolean(? GetValue(*exprRef*)).
3. If *exprValue* is **true**, then
   a. Let *stmtCompletion* be the result of evaluating the first *Statement*.
4. Else,
   a. Let *stmtCompletion* be the result of evaluating the second *Statement*.
5. Return Completion(UpdateEmpty(*stmtCompletion*, **undefined**)).

IfStatement : `if` (*Expression*) *Statement*

1. Let *exprRef* be the result of evaluating *Expression*.
2. Let *exprValue* be ! ToBoolean(? GetValue(*exprRef*)).
3. If *exprValue* is **false**, then
   a. Return NormalCompletion(**undefined**).
4. Else,
   a. Let *stmtCompletion* be the result of evaluating *Statement*.
   b. Return Completion(UpdateEmpty(*stmtCompletion*, **undefined**)).

13.7 Iteration Statements

Syntax

IterationStatement[Yield, Await, Return] :

`do` *Statement*[?Yield, ?Await, ?Return] `while` (*Expression*[+In, ?Yield, ?Await]) ;

`while` (*Expression*[+In, ?Yield, ?Await]) *Statement*[?Yield, ?Await, ?Return]

`for` ([lookahead ≠ `let` `[`] *Expression*[~In, ?Yield, ?Await] opt ; *Expression*[+In, ?Yield, ?Await] opt ;
Expression[+In, ?Yield, ?Await] opt) *Statement*[?Yield, ?Await, ?Return]

`for` (`var` *VariableDeclarationList*[~In, ?Yield, ?Await] ; *Expression*[+In, ?Yield, ?Await] opt ;
Expression[+In, ?Yield, ?Await] opt) *Statement*[?Yield, ?Await, ?Return]

`for` (*LexicalDeclaration*[~In, ?Yield, ?Await] *Expression*[+In, ?Yield, ?Await] opt ;
Expression[+In, ?Yield, ?Await] opt) *Statement*[?Yield, ?Await, ?Return]

for ([lookahead ≠ **let** **[**] *LeftHandSideExpression*[?Yield, ?Await] **in** *Expression*[+In, ?Yield, ?Await])
Statement[?Yield, ?Await, ?Return]

for (**var** *ForBinding*[?Yield, ?Await] **in** *Expression*[+In, ?Yield, ?Await])
Statement[?Yield, ?Await, ?Return]

for (*ForDeclaration*[?Yield, ?Await] **in** *Expression*[+In, ?Yield, ?Await])
Statement[?Yield, ?Await, ?Return]

for ([lookahead ≠ **let**] *LeftHandSideExpression*[?Yield, ?Await] **of**
AssignmentExpression[+In, ?Yield, ?Await]) *Statement*[?Yield, ?Await, ?Return]

for (**var** *ForBinding*[?Yield, ?Await] **of** *AssignmentExpression*[+In, ?Yield, ?Await])
Statement[?Yield, ?Await, ?Return]

for (*ForDeclaration*[?Yield, ?Await] **of** *AssignmentExpression*[+In, ?Yield, ?Await])
Statement[?Yield, ?Await, ?Return]

[+Await] **for await** ([lookahead ≠ **let**] *LeftHandSideExpression*[?Yield, ?Await] **of**
AssignmentExpression[+In, ?Yield, ?Await]) *Statement*[?Yield, ?Await, ?Return]

[+Await] **for await** (**var** *ForBinding*[?Yield, ?Await] **of** *AssignmentExpression*[+In, ?Yield, ?Await])
Statement[?Yield, ?Await, ?Return]

[+Await] **for await** (*ForDeclaration*[?Yield, ?Await] **of** *AssignmentExpression*[+In, ?Yield, ?Await])
Statement[?Yield, ?Await, ?Return]

ForDeclaration[Yield, Await] :
LetOrConst *ForBinding*[?Yield, ?Await]

ForBinding[Yield, Await] :
BindingIdentifier[?Yield, ?Await]
BindingPattern[?Yield, ?Await]

NOTE This section is extended by Annex B.3.6.

13.7.1 Semantics

13.7.1.1 Static Semantics: Early Errors

IterationStatement :

do *Statement* **while** (*Expression*) **;**
while (*Expression*) *Statement*
for (*Expression*$_{opt}$ **;** *Expression*$_{opt}$ **;** *Expression*$_{opt}$) *Statement*
for (**var** *VariableDeclarationList* **;** *Expression*$_{opt}$ **;** *Expression*$_{opt}$) *Statement*
for (*LexicalDeclaration* *Expression*$_{opt}$ **;** *Expression*$_{opt}$) *Statement*
for (*LeftHandSideExpression* **in** *Expression*) *Statement*
for (**var** *ForBinding* **in** *Expression*) *Statement*
for (*ForDeclaration* **in** *Expression*) *Statement*
for (*LeftHandSideExpression* **of** *AssignmentExpression*) *Statement*
for (**var** *ForBinding* **of** *AssignmentExpression*) *Statement*
for (*ForDeclaration* **of** *AssignmentExpression*) *Statement*
for await (*LeftHandSideExpression* **of** *AssignmentExpression*) *Statement*

`for await ( var` *ForBinding* `of` *AssignmentExpression* `)` *Statement*
`for await (` *ForDeclaration* `of` *AssignmentExpression* `)` *Statement*

- It is a Syntax Error if IsLabelledFunction(*Statement*) is **true**.

NOTE It is only necessary to apply this rule if the extension specified in B.3.2 is implemented.

13.7.1.2 Runtime Semantics: LoopContinues (*completion*, *labelSet*)

The abstract operation LoopContinues with arguments *completion* and *labelSet* is defined by the following steps:

1. If *completion*.[[Type]] is normal, return **true**.
2. If *completion*.[[Type]] is not continue, return **false**.
3. If *completion*.[[Target]] is empty, return **true**.
4. If *completion*.[[Target]] is an element of *labelSet*, return **true**.
5. Return **false**.

NOTE Within the *Statement* part of an *IterationStatement* a *ContinueStatement* may be used to begin a new iteration.

13.7.2 The `do-while` Statement

13.7.2.1 Static Semantics: ContainsDuplicateLabels

With parameter *labelSet*.

IterationStatement `: do` *Statement* `while (` *Expression* `) ;`

1. Return ContainsDuplicateLabels of *Statement* with argument *labelSet*.

13.7.2.2 Static Semantics: ContainsUndefinedBreakTarget

With parameter *labelSet*.

IterationStatement `: do` *Statement* `while (` *Expression* `) ;`

1. Return ContainsUndefinedBreakTarget of *Statement* with argument *labelSet*.

13.7.2.3 Static Semantics: ContainsUndefinedContinueTarget

With parameters *iterationSet* and *labelSet*.

IterationStatement `: do` *Statement* `while (` *Expression* `) ;`

1. Return ContainsUndefinedContinueTarget of *Statement* with arguments *iterationSet* and « ».

13.7.2.4 Static Semantics: VarDeclaredNames

IterationStatement `: do` *Statement* `while (` *Expression* `) ;`

1. Return the VarDeclaredNames of *Statement*.

13.7.2.5 Static Semantics: VarScopedDeclarations

IterationStatement : `do` *Statement* `while` `(` *Expression* `)` `;`

1. Return the VarScopedDeclarations of *Statement*.

13.7.2.6 Runtime Semantics: LabelledEvaluation

With parameter *labelSet*.

IterationStatement : `do` *Statement* `while` `(` *Expression* `)` `;`

1. Let *V* be **undefined**.
2. Repeat,
    a. Let *stmtResult* be the result of evaluating *Statement*.
    b. If LoopContinues(*stmtResult*, *labelSet*) is **false**, return Completion(UpdateEmpty(*stmtResult*, *V*)).
    c. If *stmtResult*.[[Value]] is not empty, set *V* to *stmtResult*.[[Value]].
    d. Let *exprRef* be the result of evaluating *Expression*.
    e. Let *exprValue* be ? GetValue(*exprRef*).
    f. If ! ToBoolean(*exprValue*) is **false**, return NormalCompletion(*V*).

13.7.3 The `while` Statement

13.7.3.1 Static Semantics: ContainsDuplicateLabels

With parameter *labelSet*.

IterationStatement : `while` `(` *Expression* `)` *Statement*

1. Return ContainsDuplicateLabels of *Statement* with argument *labelSet*.

13.7.3.2 Static Semantics: ContainsUndefinedBreakTarget

With parameter *labelSet*.

IterationStatement : `while` `(` *Expression* `)` *Statement*

1. Return ContainsUndefinedBreakTarget of *Statement* with argument *labelSet*.

13.7.3.3 Static Semantics: ContainsUndefinedContinueTarget

With parameters *iterationSet* and *labelSet*.

IterationStatement : `while` `(` *Expression* `)` *Statement*

1. Return ContainsUndefinedContinueTarget of *Statement* with arguments *iterationSet* and « ».

13.7.3.4 Static Semantics: VarDeclaredNames

IterationStatement : `while` `(` *Expression* `)` *Statement*

1. Return the VarDeclaredNames of *Statement*.

13.7.3.5 Static Semantics: VarScopedDeclarations

IterationStatement : `while` (*Expression*) *Statement*

1. Return the VarScopedDeclarations of *Statement*.

13.7.3.6 Runtime Semantics: LabelledEvaluation

With parameter *labelSet*.

IterationStatement : `while` (*Expression*) *Statement*

1. Let *V* be **undefined**.
2. Repeat,
   a. Let *exprRef* be the result of evaluating *Expression*.
   b. Let *exprValue* be ? GetValue(*exprRef*).
   c. If ! ToBoolean(*exprValue*) is **false**, return NormalCompletion(*V*).
   d. Let *stmtResult* be the result of evaluating *Statement*.
   e. If LoopContinues(*stmtResult*, *labelSet*) is **false**, return Completion(UpdateEmpty(*stmtResult*, *V*)).
   f. If *stmtResult*.[[Value]] is not empty, set *V* to *stmtResult*.[[Value]].

13.7.4 The `for` Statement

13.7.4.1 Static Semantics: Early Errors

IterationStatement : `for` (*LexicalDeclaration* $Expression_{opt}$; $Expression_{opt}$) *Statement*

- It is a Syntax Error if any element of the BoundNames of *LexicalDeclaration* also occurs in the VarDeclaredNames of *Statement*.

13.7.4.2 Static Semantics: ContainsDuplicateLabels

With parameter *labelSet*.

IterationStatement :

`for` ($Expression_{opt}$; $Expression_{opt}$; $Expression_{opt}$) *Statement*

`for` (`var` *VariableDeclarationList* ; $Expression_{opt}$; $Expression_{opt}$) *Statement*

`for` (*LexicalDeclaration* $Expression_{opt}$; $Expression_{opt}$) *Statement*

1. Return ContainsDuplicateLabels of *Statement* with argument *labelSet*.

13.7.4.3 Static Semantics: ContainsUndefinedBreakTarget

With parameter *labelSet*.

IterationStatement :

`for` ($Expression_{opt}$; $Expression_{opt}$; $Expression_{opt}$) *Statement*

`for` (`var` *VariableDeclarationList* ; $Expression_{opt}$; $Expression_{opt}$) *Statement*

for (*LexicalDeclaration* *Expression*$_{opt}$; *Expression*$_{opt}$) *Statement*

1. Return ContainsUndefinedBreakTarget of *Statement* with argument *labelSet*.

13.7.4.4 Static Semantics: ContainsUndefinedContinueTarget

With parameters *iterationSet* and *labelSet*.

IterationStatement :

for (*Expression*$_{opt}$; *Expression*$_{opt}$; *Expression*$_{opt}$) *Statement*

for (**var** *VariableDeclarationList* ; *Expression*$_{opt}$; *Expression*$_{opt}$) *Statement*

for (*LexicalDeclaration* *Expression*$_{opt}$; *Expression*$_{opt}$) *Statement*

1. Return ContainsUndefinedContinueTarget of *Statement* with arguments *iterationSet* and « ».

13.7.4.5 Static Semantics: VarDeclaredNames

IterationStatement : **for** (*Expression*$_{opt}$; *Expression*$_{opt}$; *Expression*$_{opt}$) *Statement*

1. Return the VarDeclaredNames of *Statement*.

IterationStatement : **for** (**var** *VariableDeclarationList* ; *Expression*$_{opt}$; *Expression*$_{opt}$) *Statement*

1. Let *names* be BoundNames of *VariableDeclarationList*.
2. Append to *names* the elements of the VarDeclaredNames of *Statement*.
3. Return *names*.

IterationStatement : **for** (*LexicalDeclaration* *Expression*$_{opt}$; *Expression*$_{opt}$) *Statement*

1. Return the VarDeclaredNames of *Statement*.

13.7.4.6 Static Semantics: VarScopedDeclarations

IterationStatement : **for** (*Expression*$_{opt}$; *Expression*$_{opt}$; *Expression*$_{opt}$) *Statement*

1. Return the VarScopedDeclarations of *Statement*.

IterationStatement : **for** (**var** *VariableDeclarationList* ; *Expression*$_{opt}$; *Expression*$_{opt}$) *Statement*

1. Let *declarations* be VarScopedDeclarations of *VariableDeclarationList*.
2. Append to *declarations* the elements of the VarScopedDeclarations of *Statement*.
3. Return *declarations*.

IterationStatement : **for** (*LexicalDeclaration* *Expression*$_{opt}$; *Expression*$_{opt}$) *Statement*

1. Return the VarScopedDeclarations of *Statement*.

13.7.4.7 Runtime Semantics: LabelledEvaluation

With parameter *labelSet*.

IterationStatement : **for** (*Expression*$_{opt}$; *Expression*$_{opt}$; *Expression*$_{opt}$) *Statement*

1. If the first *Expression* is present, then
    a. Let *exprRef* be the result of evaluating the first *Expression*.
    b. Perform ? GetValue(*exprRef*).
2. Return ? ForBodyEvaluation(the second *Expression*, the third *Expression*, *Statement*, « », *labelSet*).

IterationStatement : `for` `(` `var` *VariableDeclarationList* `;` *Expression*$_{opt}$ `;` *Expression*$_{opt}$ `)` *Statement*

1. Let *varDcl* be the result of evaluating *VariableDeclarationList*.
2. ReturnIfAbrupt(*varDcl*).
3. Return ? ForBodyEvaluation(the first *Expression*, the second *Expression*, *Statement*, « », *labelSet*).

IterationStatement : `for` `(` *LexicalDeclaration* *Expression*$_{opt}$ `;` *Expression*$_{opt}$ `)` *Statement*

1. Let *oldEnv* be the running execution context's LexicalEnvironment.
2. Let *loopEnv* be NewDeclarativeEnvironment(*oldEnv*).
3. Let *loopEnvRec* be *loopEnv*'s EnvironmentRecord.
4. Let *isConst* be IsConstantDeclaration of *LexicalDeclaration*.
5. Let *boundNames* be the BoundNames of *LexicalDeclaration*.
6. For each element *dn* of *boundNames*, do
    a. If *isConst* is **true**, then
        i. Perform ! *loopEnvRec*.CreateImmutableBinding(*dn*, **true**).
    b. Else,
        i. Perform ! *loopEnvRec*.CreateMutableBinding(*dn*, **false**).
7. Set the running execution context's LexicalEnvironment to *loopEnv*.
8. Let *forDcl* be the result of evaluating *LexicalDeclaration*.
9. If *forDcl* is an abrupt completion, then
    a. Set the running execution context's LexicalEnvironment to *oldEnv*.
    b. Return Completion(*forDcl*).
10. If *isConst* is **false**, let *perIterationLets* be *boundNames*; otherwise let *perIterationLets* be « ».
11. Let *bodyResult* be ForBodyEvaluation(the first *Expression*, the second *Expression*, *Statement*, *perIterationLets*, *labelSet*).
12. Set the running execution context's LexicalEnvironment to *oldEnv*.
13. Return Completion(*bodyResult*).

13.7.4.8 Runtime Semantics: ForBodyEvaluation (*test*, *increment*, *stmt*, *perIterationBindings*, *labelSet*)

The abstract operation ForBodyEvaluation with arguments *test*, *increment*, *stmt*, *perIterationBindings*, and *labelSet* is performed as follows:

1. Let *V* be **undefined**.
2. Perform ? CreatePerIterationEnvironment(*perIterationBindings*).
3. Repeat,
    a. If *test* is not [empty], then
        i. Let *testRef* be the result of evaluating *test*.
        ii. Let *testValue* be ? GetValue(*testRef*).
        iii. If ! ToBoolean(*testValue*) is **false**, return NormalCompletion(*V*).
    b. Let *result* be the result of evaluating *stmt*.
    c. If LoopContinues(*result*, *labelSet*) is **false**, return Completion(UpdateEmpty(*result*, *V*)).
    d. If *result*.[[Value]] is not empty, set *V* to *result*.[[Value]].

e. Perform ? CreatePerIterationEnvironment(*perIterationBindings*).
f. If *increment* is not [empty], then
    i. Let *incRef* be the result of evaluating *increment*.
    ii. Perform ? GetValue(*incRef*).

13.7.4.9 Runtime Semantics: CreatePerIterationEnvironment (*perIterationBindings*)

The abstract operation CreatePerIterationEnvironment with argument *perIterationBindings* is performed as follows:

1. If *perIterationBindings* has any elements, then
    a. Let *lastIterationEnv* be the running execution context's LexicalEnvironment.
    b. Let *lastIterationEnvRec* be *lastIterationEnv*'s EnvironmentRecord.
    c. Let *outer* be *lastIterationEnv*'s outer environment reference.
    d. Assert: *outer* is not **null**.
    e. Let *thisIterationEnv* be NewDeclarativeEnvironment(*outer*).
    f. Let *thisIterationEnvRec* be *thisIterationEnv*'s EnvironmentRecord.
    g. For each element *bn* of *perIterationBindings*, do
        i. Perform ! *thisIterationEnvRec*.CreateMutableBinding(*bn*, **false**).
        ii. Let *lastValue* be ? *lastIterationEnvRec*.GetBindingValue(*bn*, **true**).
        iii. Perform *thisIterationEnvRec*.InitializeBinding(*bn*, *lastValue*).
    h. Set the running execution context's LexicalEnvironment to *thisIterationEnv*.
2. Return **undefined**.

13.7.5 The `for-in`, `for-of`, and `for-await-of` Statements

13.7.5.1 Static Semantics: Early Errors

IterationStatement :
    `for` (*LeftHandSideExpression* `in` *Expression*) *Statement*
    `for` (*LeftHandSideExpression* `of` *AssignmentExpression*) *Statement*
    `for await` (*LeftHandSideExpression* `of` *AssignmentExpression*) *Statement*

If *LeftHandSideExpression* is either an *ObjectLiteral* or an *ArrayLiteral*, the following Early Error rules are applied:

- It is a Syntax Error if *LeftHandSideExpression* is not covering an *AssignmentPattern*.
- All Early Error rules for *AssignmentPattern* and its derived productions also apply to the *AssignmentPattern* that is covered by *LeftHandSideExpression*.

If *LeftHandSideExpression* is neither an *ObjectLiteral* nor an *ArrayLiteral*, the following Early Error rule is applied:

- It is a Syntax Error if AssignmentTargetType of *LeftHandSideExpression* is not simple.

IterationStatement :
    `for` (*ForDeclaration* `in` *Expression*) *Statement*
    `for` (*ForDeclaration* `of` *AssignmentExpression*) *Statement*
    `for await` (*ForDeclaration* `of` *AssignmentExpression*) *Statement*

- It is a Syntax Error if the BoundNames of *ForDeclaration* contains **"let"**.
- It is a Syntax Error if any element of the BoundNames of *ForDeclaration* also occurs in the VarDeclaredNames of *Statement*.

- It is a Syntax Error if the BoundNames of *ForDeclaration* contains any duplicate entries.

13.7.5.2 Static Semantics: BoundNames

ForDeclaration : *LetOrConst* *ForBinding*

1. Return the BoundNames of *ForBinding*.

13.7.5.3 Static Semantics: ContainsDuplicateLabels

With parameter *labelSet*.

IterationStatement :

```
for ( LeftHandSideExpression in Expression ) Statement
for ( var ForBinding in Expression ) Statement
for ( ForDeclaration in Expression ) Statement
for ( LeftHandSideExpression of AssignmentExpression ) Statement
for ( var ForBinding of AssignmentExpression ) Statement
for ( ForDeclaration of AssignmentExpression ) Statement
for await ( LeftHandSideExpression of AssignmentExpression ) Statement
for await ( var ForBinding of AssignmentExpression ) Statement
for await ( ForDeclaration of AssignmentExpression ) Statement
```

1. Return ContainsDuplicateLabels of *Statement* with argument *labelSet*.

NOTE This section is extended by Annex B.3.6.

13.7.5.4 Static Semantics: ContainsUndefinedBreakTarget

With parameter *labelSet*.

IterationStatement :

```
for ( LeftHandSideExpression in Expression ) Statement
for ( var ForBinding in Expression ) Statement
for ( ForDeclaration in Expression ) Statement
for ( LeftHandSideExpression of AssignmentExpression ) Statement
for ( var ForBinding of AssignmentExpression ) Statement
for ( ForDeclaration of AssignmentExpression ) Statement
for await ( LeftHandSideExpression of AssignmentExpression ) Statement
for await ( var ForBinding of AssignmentExpression ) Statement
for await ( ForDeclaration of AssignmentExpression ) Statement
```

1. Return ContainsUndefinedBreakTarget of *Statement* with argument *labelSet*.

NOTE This section is extended by Annex B.3.6.

13.7.5.5 Static Semantics: ContainsUndefinedContinueTarget

With parameters *iterationSet* and *labelSet*.

IterationStatement **:**

for **(** *LeftHandSideExpression* **in** *Expression* **)** *Statement*
for **(** **var** *ForBinding* **in** *Expression* **)** *Statement*
for **(** *ForDeclaration* **in** *Expression* **)** *Statement*
for **(** *LeftHandSideExpression* **of** *AssignmentExpression* **)** *Statement*
for **(** **var** *ForBinding* **of** *AssignmentExpression* **)** *Statement*
for **(** *ForDeclaration* **of** *AssignmentExpression* **)** *Statement*
for **await** **(** *LeftHandSideExpression* **of** *AssignmentExpression* **)** *Statement*
for **await** **(** **var** *ForBinding* **of** *AssignmentExpression* **)** *Statement*
for **await** **(** *ForDeclaration* **of** *AssignmentExpression* **)** *Statement*

1. Return ContainsUndefinedContinueTarget of *Statement* with arguments *iterationSet* and « ».

NOTE This section is extended by Annex B.3.6.

13.7.5.6 Static Semantics: IsDestructuring

ForDeclaration **:** *LetOrConst* *ForBinding*

1. Return IsDestructuring of *ForBinding*.

ForBinding **:** *BindingIdentifier*

1. Return **false**.

ForBinding **:** *BindingPattern*

1. Return **true**.

NOTE This section is extended by Annex B.3.6.

13.7.5.7 Static Semantics: VarDeclaredNames

IterationStatement **:**

for **(** *LeftHandSideExpression* **in** *Expression* **)** *Statement*
for **(** *ForDeclaration* **in** *Expression* **)** *Statement*
for **(** *LeftHandSideExpression* **of** *AssignmentExpression* **)** *Statement*
for **(** *ForDeclaration* **of** *AssignmentExpression* **)** *Statement*
for **await** **(** *LeftHandSideExpression* **of** *AssignmentExpression* **)** *Statement*
for **await** **(** *ForDeclaration* **of** *AssignmentExpression* **)** *Statement*

1. Return the VarDeclaredNames of *Statement*.

IterationStatement **:**

for **(** **var** *ForBinding* **in** *Expression* **)** *Statement*
for **(** **var** *ForBinding* **of** *AssignmentExpression* **)** *Statement*
for **await** **(** **var** *ForBinding* **of** *AssignmentExpression* **)** *Statement*

1. Let *names* be the BoundNames of *ForBinding*.
2. Append to *names* the elements of the VarDeclaredNames of *Statement*.
3. Return *names*.

NOTE This section is extended by Annex B.3.6.

13.7.5.8 Static Semantics: VarScopedDeclarations

IterationStatement :

`for` (*LeftHandSideExpression* `in` *Expression*) *Statement*
`for` (*ForDeclaration* `in` *Expression*) *Statement*
`for` (*LeftHandSideExpression* `of` *AssignmentExpression*) *Statement*
`for` (*ForDeclaration* `of` *AssignmentExpression*) *Statement*
`for await` (*LeftHandSideExpression* `of` *AssignmentExpression*) *Statement*
`for await` (*ForDeclaration* `of` *AssignmentExpression*) *Statement*

1. Return the VarScopedDeclarations of *Statement*.

IterationStatement :

`for` (`var` *ForBinding* `in` *Expression*) *Statement*
`for` (`var` *ForBinding* `of` *AssignmentExpression*) *Statement*
`for await` (`var` *ForBinding* `of` *AssignmentExpression*) *Statement*

1. Let *declarations* be a List containing *ForBinding*.
2. Append to *declarations* the elements of the VarScopedDeclarations of *Statement*.
3. Return *declarations*.

NOTE This section is extended by Annex B.3.6.

13.7.5.9 Runtime Semantics: BindingInitialization

With parameters *value* and *environment*.

NOTE **undefined** is passed for *environment* to indicate that a PutValue operation should be used to assign the initialization value. This is the case for **`var`** statements and the formal parameter lists of some non-strict functions (see 9.2.10). In those cases a lexical binding is hoisted and preinitialized prior to evaluation of its initializer.

ForDeclaration : *LetOrConst* *ForBinding*

1. Return the result of performing BindingInitialization for *ForBinding* passing *value* and *environment* as the arguments.

13.7.5.10 Runtime Semantics: BindingInstantiation

With parameter *environment*.

ForDeclaration : *LetOrConst* *ForBinding*

1. Let *envRec* be *environment*'s EnvironmentRecord.
2. Assert: *envRec* is a declarative Environment Record.
3. For each element *name* of the BoundNames of *ForBinding*, do

a. If IsConstantDeclaration of *LetOrConst* is **true**, then
    i. Perform ! *envRec*.CreateImmutableBinding(*name*, **true**).
b. Else,
    i. Perform ! *envRec*.CreateMutableBinding(*name*, **false**).

13.7.5.11 Runtime Semantics: LabelledEvaluation

With parameter *labelSet*.

IterationStatement : `for` (*LeftHandSideExpression* `in` *Expression*) *Statement*

1. Let *keyResult* be ? ForIn/OfHeadEvaluation(« », *Expression*, enumerate).
2. Return ? ForIn/OfBodyEvaluation(*LeftHandSideExpression*, *Statement*, *keyResult*, enumerate, assignment, *labelSet*).

IterationStatement : `for` (`var` *ForBinding* `in` *Expression*) *Statement*

1. Let *keyResult* be ? ForIn/OfHeadEvaluation(« », *Expression*, enumerate).
2. Return ? ForIn/OfBodyEvaluation(*ForBinding*, *Statement*, *keyResult*, enumerate, varBinding, *labelSet*).

IterationStatement : `for` (*ForDeclaration* `in` *Expression*) *Statement*

1. Let *keyResult* be ? ForIn/OfHeadEvaluation(BoundNames of *ForDeclaration*, *Expression*, enumerate).
2. Return ? ForIn/OfBodyEvaluation(*ForDeclaration*, *Statement*, *keyResult*, enumerate, lexicalBinding, *labelSet*).

IterationStatement : `for` (*LeftHandSideExpression* `of` *AssignmentExpression*) *Statement*

1. Let *keyResult* be ? ForIn/OfHeadEvaluation(« », *AssignmentExpression*, iterate).
2. Return ? ForIn/OfBodyEvaluation(*LeftHandSideExpression*, *Statement*, *keyResult*, iterate, assignment, *labelSet*).

IterationStatement : `for` (`var` *ForBinding* `of` *AssignmentExpression*) *Statement*

1. Let *keyResult* be ? ForIn/OfHeadEvaluation(« », *AssignmentExpression*, iterate).
2. Return ? ForIn/OfBodyEvaluation(*ForBinding*, *Statement*, *keyResult*, iterate, varBinding, *labelSet*).

IterationStatement : `for` (*ForDeclaration* `of` *AssignmentExpression*) *Statement*

1. Let *keyResult* be ? ForIn/OfHeadEvaluation(BoundNames of *ForDeclaration*, *AssignmentExpression*, iterate).
2. Return ? ForIn/OfBodyEvaluation(*ForDeclaration*, *Statement*, *keyResult*, iterate, lexicalBinding, *labelSet*).

IterationStatement : `for` `await` (*LeftHandSideExpression* `of` *AssignmentExpression*) *Statement*

1. Let *keyResult* be ? ForIn/OfHeadEvaluation(« », *AssignmentExpression*, async-iterate).
2. Return ? ForIn/OfBodyEvaluation(*LeftHandSideExpression*, *Statement*, *keyResult*, iterate, assignment, *labelSet*, async).

IterationStatement : `for` `await` (`var` *ForBinding* `of` *AssignmentExpression*) *Statement*

1. Let *keyResult* be ? ForIn/OfHeadEvaluation(« », *AssignmentExpression*, async-iterate).
2. Return ? ForIn/OfBodyEvaluation(*ForBinding*, *Statement*, *keyResult*, iterate, varBinding, *labelSet*, async).

IterationStatement : `for` `await` (*ForDeclaration* `of` *AssignmentExpression*) *Statement*

1. Let *keyResult* be ? ForIn/OfHeadEvaluation(BoundNames of *ForDeclaration*, *AssignmentExpression*, async-iterate).
2. Return ? ForIn/OfBodyEvaluation(*ForDeclaration*, *Statement*, *keyResult*, iterate, lexicalBinding, *labelSet*, async).

NOTE This section is extended by Annex B.3.6.

13.7.5.12 Runtime Semantics: ForIn/OfHeadEvaluation (*uninitializedBoundNames*, *expr*, *iterationKind*)

The abstract operation ForIn/OfHeadEvaluation is called with arguments *uninitializedBoundNames*, *expr*, and *iterationKind*. The value of *iterationKind* is either enumerate, iterate, or async-iterate.

1. Let *oldEnv* be the running execution context's LexicalEnvironment.
2. If *uninitializedBoundNames* is not an empty List, then
   a. Assert: *uninitializedBoundNames* has no duplicate entries.
   b. Let *newEnv* be NewDeclarativeEnvironment(*oldEnv*).
   c. Let *newEnvRec* be *newEnv*'s EnvironmentRecord.
   d. For each string *name* in *uninitializedBoundNames*, do
      i. Perform ! *newEnvRec*.CreateMutableBinding(*name*, **false**).
   e. Set the running execution context's LexicalEnvironment to *newEnv*.
3. Let *exprRef* be the result of evaluating *expr*.
4. Set the running execution context's LexicalEnvironment to *oldEnv*.
5. Let *exprValue* be ? GetValue(*exprRef*).
6. If *iterationKind* is enumerate, then
   a. If *exprValue* is **undefined** or **null**, then
      i. Return Completion { [[Type]]: break, [[Value]]: empty, [[Target]]: empty }.
   b. Let *obj* be ! ToObject(*exprValue*).
   c. Return ? EnumerateObjectProperties(*obj*).
7. Else,
   a. Assert: *iterationKind* is iterate or async-iterate.
   b. If *iterationKind* is async-iterate, let *iteratorHint* be async.
   c. Else, let *iteratorHint* be sync.
   d. Return ? GetIterator(*exprValue*, *iteratorHint*).

13.7.5.13 Runtime Semantics: ForIn/OfBodyEvaluation (*lhs*, *stmt*, *iteratorRecord*, *iterationKind*, *lhsKind*, *labelSet* [, *iteratorKind*])

The abstract operation ForIn/OfBodyEvaluation is called with arguments *lhs*, *stmt*, *iteratorRecord*, *iterationKind*, *lhsKind*, *labelSet*, and optional argument *iteratorKind*. The value of *lhsKind* is either assignment, varBinding or lexicalBinding. The value of *iteratorKind* is either sync or async.

1. If *iteratorKind* is not present, set *iteratorKind* to sync.
2. Let *oldEnv* be the running execution context's LexicalEnvironment.
3. Let *V* be **undefined**.
4. Let *destructuring* be IsDestructuring of *lhs*.
5. If *destructuring* is **true** and if *lhsKind* is assignment, then
   a. Assert: *lhs* is a *LeftHandSideExpression*.
   b. Let *assignmentPattern* be the *AssignmentPattern* that is covered by *lhs*.

6. Repeat,
    a. Let *nextResult* be ? Call(*iteratorRecord*.[[NextMethod]], *iteratorRecord*.[[Iterator]]).
    b. If *iteratorKind* is async, then set *nextResult* to ? Await(*nextResult*).
    c. If Type(*nextResult*) is not Object, throw a **TypeError** exception.
    d. Let *done* be ? IteratorComplete(*nextResult*).
    e. If *done* is **true**, return NormalCompletion(*V*).
    f. Let *nextValue* be ? IteratorValue(*nextResult*).
    g. If *lhsKind* is either assignment or varBinding, then
        i. If *destructuring* is **false**, then
            1. Let *lhsRef* be the result of evaluating *lhs*. (It may be evaluated repeatedly.)
    h. Else,
        i. Assert: *lhsKind* is lexicalBinding.
        ii. Assert: *lhs* is a *ForDeclaration*.
        iii. Let *iterationEnv* be NewDeclarativeEnvironment(*oldEnv*).
        iv. Perform BindingInstantiation for *lhs* passing *iterationEnv* as the argument.
        v. Set the running execution context's LexicalEnvironment to *iterationEnv*.
        vi. If *destructuring* is **false**, then
            1. Assert: *lhs* binds a single name.
            2. Let *lhsName* be the sole element of BoundNames of *lhs*.
            3. Let *lhsRef* be ! ResolveBinding(*lhsName*).
    i. If *destructuring* is **false**, then
        i. If *lhsRef* is an abrupt completion, then
            1. Let *status* be *lhsRef*.
        ii. Else if *lhsKind* is lexicalBinding, then
            1. Let *status* be InitializeReferencedBinding(*lhsRef*, *nextValue*).
        iii. Else,
            1. Let *status* be PutValue(*lhsRef*, *nextValue*).
    j. Else,
        i. If *lhsKind* is assignment, then
            1. Let *status* be DestructuringAssignmentEvaluation of *assignmentPattern* with argument *nextValue*.
        ii. Else if *lhsKind* is varBinding, then
            1. Assert: *lhs* is a *ForBinding*.
            2. Let *status* be BindingInitialization of *lhs* with arguments *nextValue* and **undefined**.
        iii. Else,
            1. Assert: *lhsKind* is lexicalBinding.
            2. Assert: *lhs* is a *ForDeclaration*.
            3. Let *status* be BindingInitialization of *lhs* with arguments *nextValue* and *iterationEnv*.
    k. If *status* is an abrupt completion, then
        i. Set the running execution context's LexicalEnvironment to *oldEnv*.
        ii. If *iteratorKind* is async, return ? AsyncIteratorClose(*iteratorRecord*, *status*).
        iii. If *iterationKind* is enumerate, then
            1. Return *status*.
        iv. Else,
            1. Assert: *iterationKind* is iterate.
            2. Return ? IteratorClose(*iteratorRecord*, *status*).
    l. Let *result* be the result of evaluating *stmt*.

m. Set the running execution context's LexicalEnvironment to *oldEnv*.
n. If LoopContinues(*result*, *labelSet*) is **false**, then
    i. If *iterationKind* is enumerate, then
        1. Return Completion(UpdateEmpty(*result*, *V*)).
    ii. Else,
        1. Assert: *iterationKind* is iterate.
        2. Set *status* to UpdateEmpty(*result*, *V*).
        3. If *iteratorKind* is async, return ? AsyncIteratorClose(*iteratorRecord*, *status*).
        4. Return ? IteratorClose(*iteratorRecord*, *status*).
o. If *result*.[[Value]] is not empty, set *V* to *result*.[[Value]].

13.7.5.14 Runtime Semantics: Evaluation

ForBinding : *BindingIdentifier*

1. Let *bindingId* be StringValue of *BindingIdentifier*.
2. Return ? ResolveBinding(*bindingId*).

13.7.5.15 EnumerateObjectProperties (*O*)

When the abstract operation EnumerateObjectProperties is called with argument *O*, the following steps are taken:

1. Assert: Type(*O*) is Object.
2. Return an Iterator object (25.1.1.2) whose **`next`** method iterates over all the String-valued keys of enumerable properties of *O*. The iterator object is never directly accessible to ECMAScript code. The mechanics and order of enumerating the properties is not specified but must conform to the rules specified below.

The iterator's **`throw`** and **`return`** methods are **null** and are never invoked. The iterator's **`next`** method processes object properties to determine whether the property key should be returned as an iterator value. Returned property keys do not include keys that are Symbols. Properties of the target object may be deleted during enumeration. A property that is deleted before it is processed by the iterator's **`next`** method is ignored. If new properties are added to the target object during enumeration, the newly added properties are not guaranteed to be processed in the active enumeration. A property name will be returned by the iterator's **`next`** method at most once in any enumeration.

Enumerating the properties of the target object includes enumerating properties of its prototype, and the prototype of the prototype, and so on, recursively; but a property of a prototype is not processed if it has the same name as a property that has already been processed by the iterator's **`next`** method. The values of [[Enumerable]] attributes are not considered when determining if a property of a prototype object has already been processed. The enumerable property names of prototype objects must be obtained by invoking EnumerateObjectProperties passing the prototype object as the argument. EnumerateObjectProperties must obtain the own property keys of the target object by calling its [[OwnPropertyKeys]] internal method. Property attributes of the target object must be obtained by calling its [[GetOwnProperty]] internal method.

In addition, if neither *O* nor any object in its prototype chain is a Proxy exotic object, Integer-Indexed exotic object, module namespace exotic object, or implementation provided exotic object, then the iterator must behave as would the iterator given by CreateForInIterator(*O*) until one of the following occurs:

- the value of the [[Prototype]] internal slot of *O* or an object in its prototype chain changes,
- a property is removed from *O* or an object in its prototype chain,
- a property is added to an object in *O*'s prototype chain, or

- the value of the [[Enumerable]] attribute of a property of *O* or an object in its prototype chain changes.

NOTE 1 Hosts are not required to implement the algorithm in 13.7.5.16.2.1 directly. They may choose any implementation whose behaviour will not deviate from that algorithm unless one of the constraints in the previous paragraph is violated.

The following is an informative definition of an ECMAScript generator function that conforms to these rules:

```
function* EnumerateObjectProperties(obj) {
  const visited = new Set();
  for (const key of Reflect.ownKeys(obj)) {
    if (typeof key === "symbol") continue;
    const desc = Reflect.getOwnPropertyDescriptor(obj, key);
    if (desc) {
      visited.add(key);
      if (desc.enumerable) yield key;
    }
  }
  const proto = Reflect.getPrototypeOf(obj);
  if (proto === null) return;
  for (const protoKey of EnumerateObjectProperties(proto)) {
    if (!visited.has(protoKey)) yield protoKey;
  }
}
```

NOTE 2 The list of exotic objects for which implementations are not required to match CreateForInIterator was chosen because implementations historically differed in behaviour for those cases, and agreed in all others.

13.7.5.16 For-In Iterator Objects

A For-In Iterator is an object that represents a specific iteration over some specific object. For-In Iterator objects are never directly accessible to ECMAScript code; they exist solely to illustrate the behaviour of EnumerateObjectProperties.

13.7.5.16.1 CreateForInIterator (*object*)

The abstract operation CreateForInIterator with argument *object* is used to create a For-In Iterator object which iterates over the own and inherited enumerable string properties of *object* in a specific order. It performs the following steps:

1. Assert: Type(*object*) is Object.
2. Let *iterator* be OrdinaryObjectCreate(%ForInIteratorPrototype%, « [[Object]], [[ObjectWasVisited]], [[VisitedKeys]], [[RemainingKeys]] »).
3. Set *iterator*.[[Object]] to *object*.
4. Set *iterator*.[[ObjectWasVisited]] to **false**.
5. Set *iterator*.[[VisitedKeys]] to a new empty List.

6. Set *iterator*.[[RemainingKeys]] to a new empty List.
7. Return *iterator*.

13.7.5.16.2 The %ForInIteratorPrototype% Object

The *%ForInIteratorPrototype%* object:

- has properties that are inherited by all For-In Iterator Objects.
- is an ordinary object.
- has a [[Prototype]] internal slot whose value is the intrinsic object %IteratorPrototype%.
- is never directly accessible to ECMAScript code.
- has the following properties:

13.7.5.16.2.1 %ForInIteratorPrototype%.next ( )

1. Let *O* be the **this** value.
2. Assert: Type(*O*) is Object.
3. Assert: *O* has all of the internal slots of a For-In Iterator Instance (13.7.5.16.3).
4. Let *object* be *O*.[[Object]].
5. Let *visited* be *O*.[[VisitedKeys]].
6. Let *remaining* be *O*.[[RemainingKeys]].
7. Repeat,
    a. If *O*.[[ObjectWasVisited]] is **false**, then
        i. Let *keys* be ? *object*.[[OwnPropertyKeys]]().
        ii. For each *key* of *keys* in List order, do
            1. If Type(*key*) is String, then
                a. Append *key* to *remaining*.
        iii. Set *O*.[[ObjectWasVisited]] to **true**.
    b. Repeat, while *remaining* is not empty,
        i. Remove the first element from *remaining* and let *r* be the value of the element.
        ii. If there does not exist an element *v* of *visited* such that SameValue(*r*, *v*) is **true**, then
            1. Let *desc* be ? *object*.[[GetOwnProperty]](*r*).
            2. If *desc* is not **undefined**, then
                a. Append *r* to *visited*.
                b. If *desc*.[[Enumerable]] is **true**, return CreateIterResultObject(*r*, **false**).
    c. Set *object* to ? *object*.[[GetPrototypeOf]]().
    d. Set *O*.[[Object]] to *object*.
    e. Set *O*.[[ObjectWasVisited]] to **false**.
    f. If *object* is **null**, return CreateIterResultObject(**undefined**, **true**).

13.7.5.16.3 Properties of For-In Iterator Instances

For-In Iterator instances are ordinary objects that inherit properties from the %ForInIteratorPrototype% intrinsic object. For-In Iterator instances are initially created with the internal slots listed in Table 36.

Table 36: Internal Slots of For-In Iterator Instances

Internal Slot	Description
[[Object]]	The Object value whose properties are being iterated.
[[ObjectWasVisited]]	**true** if the iterator has invoked [[OwnPropertyKeys]] on [[Object]], **false** otherwise.
[[VisitedKeys]]	A list of String values which have been emitted by this iterator thus far.
[[RemainingKeys]]	A list of String values remaining to be emitted for the current object, before iterating the properties of its prototype (if its prototype is not **null**).

13.8 The `continue` Statement

Syntax

ContinueStatement[Yield, Await] :
  continue ;
  continue [no *LineTerminator* here] *LabelIdentifier*[?Yield, ?Await] ;

13.8.1 Static Semantics: Early Errors

ContinueStatement : **continue** ;
ContinueStatement : **continue** *LabelIdentifier* ;

- It is a Syntax Error if this *ContinueStatement* is not nested, directly or indirectly (but not crossing function boundaries), within an *IterationStatement*.

13.8.2 Static Semantics: ContainsUndefinedContinueTarget

With parameters *iterationSet* and *labelSet*.

ContinueStatement : **continue** ;

1. Return **false**.

ContinueStatement : **continue** *LabelIdentifier* ;

1. If the StringValue of *LabelIdentifier* is not an element of *iterationSet*, return **true**.
2. Return **false**.

13.8.3 Runtime Semantics: Evaluation

ContinueStatement : **continue** ;

1. Return Completion { [[Type]]: continue, [[Value]]: empty, [[Target]]: empty }.

ContinueStatement : **continue** *LabelIdentifier* ;

1. Let *label* be the StringValue of *LabelIdentifier*.

2. Return Completion { [[Type]]: continue, [[Value]]: empty, [[Target]]: *label* }.

13.9 The `break` Statement

Syntax

BreakStatement[Yield, Await] :

`break ;`

`break` [no *LineTerminator* here] *LabelIdentifier*[?Yield, ?Await] `;`

13.9.1 Static Semantics: Early Errors

BreakStatement : `break ;`

- It is a Syntax Error if this *BreakStatement* is not nested, directly or indirectly (but not crossing function boundaries), within an *IterationStatement* or a *SwitchStatement*.

13.9.2 Static Semantics: ContainsUndefinedBreakTarget

With parameter *labelSet*.

BreakStatement : `break ;`

1. Return **false**.

BreakStatement : `break` *LabelIdentifier* `;`

1. If the StringValue of *LabelIdentifier* is not an element of *labelSet*, return **true**.
2. Return **false**.

13.9.3 Runtime Semantics: Evaluation

BreakStatement : `break ;`

1. Return Completion { [[Type]]: break, [[Value]]: empty, [[Target]]: empty }.

BreakStatement : `break` *LabelIdentifier* `;`

1. Let *label* be the StringValue of *LabelIdentifier*.
2. Return Completion { [[Type]]: break, [[Value]]: empty, [[Target]]: *label* }.

13.10 The `return` Statement

Syntax

ReturnStatement[Yield, Await] :

`return ;`

`return` [no *LineTerminator* here] *Expression*[+In, ?Yield, ?Await] `;`

NOTE A **`return`** statement causes a function to cease execution and, in most cases, returns a value to the caller. If *Expression* is omitted, the return value is **undefined**. Otherwise, the return value is the value of *Expression*. A **`return`** statement may not actually return a value to the caller depending on surrounding context. For example, in a **`try`** block, a **`return`** statement's completion record may be replaced with another completion record during evaluation of the **`finally`** block.

13.10.1 Runtime Semantics: Evaluation

ReturnStatement **`: return ;`**

1. Return Completion { [[Type]]: return, [[Value]]: **undefined**, [[Target]]: empty }.

ReturnStatement **`: return`** *Expression* **`;`**

1. Let *exprRef* be the result of evaluating *Expression*.
2. Let *exprValue* be ? GetValue(*exprRef*).
3. If ! GetGeneratorKind() is async, set *exprValue* to ? Await(*exprValue*).
4. Return Completion { [[Type]]: return, [[Value]]: *exprValue*, [[Target]]: empty }.

13.11 The `with` Statement

Syntax

WithStatement[Yield, Await, Return] :
`with` **`(`** *Expression*[+In, ?Yield, ?Await] **`)`** *Statement*[?Yield, ?Await, ?Return]

NOTE The **`with`** statement adds an object Environment Record for a computed object to the lexical environment of the running execution context. It then executes a statement using this augmented lexical environment. Finally, it restores the original lexical environment.

13.11.1 Static Semantics: Early Errors

WithStatement **`: with (`** *Expression* **`)`** *Statement*

- It is a Syntax Error if the code that matches this production is contained in strict mode code.
- It is a Syntax Error if IsLabelledFunction(*Statement*) is **true**.

NOTE It is only necessary to apply the second rule if the extension specified in B.3.2 is implemented.

13.11.2 Static Semantics: ContainsDuplicateLabels

With parameter *labelSet*.

WithStatement **`: with (`** *Expression* **`)`** *Statement*

1. Return ContainsDuplicateLabels of *Statement* with argument *labelSet*.

13.11.3 Static Semantics: ContainsUndefinedBreakTarget

With parameter *labelSet*.

WithStatement : `with` (*Expression*) *Statement*

1. Return ContainsUndefinedBreakTarget of *Statement* with argument *labelSet*.

13.11.4 Static Semantics: ContainsUndefinedContinueTarget

With parameters *iterationSet* and *labelSet*.

WithStatement : `with` (*Expression*) *Statement*

1. Return ContainsUndefinedContinueTarget of *Statement* with arguments *iterationSet* and « ».

13.11.5 Static Semantics: VarDeclaredNames

WithStatement : `with` (*Expression*) *Statement*

1. Return the VarDeclaredNames of *Statement*.

13.11.6 Static Semantics: VarScopedDeclarations

WithStatement : `with` (*Expression*) *Statement*

1. Return the VarScopedDeclarations of *Statement*.

13.11.7 Runtime Semantics: Evaluation

WithStatement : `with` (*Expression*) *Statement*

1. Let *val* be the result of evaluating *Expression*.
2. Let *obj* be ? ToObject(? GetValue(*val*)).
3. Let *oldEnv* be the running execution context's LexicalEnvironment.
4. Let *newEnv* be NewObjectEnvironment(*obj*, *oldEnv*).
5. Set the *withEnvironment* flag of *newEnv*'s EnvironmentRecord to **true**.
6. Set the running execution context's LexicalEnvironment to *newEnv*.
7. Let *C* be the result of evaluating *Statement*.
8. Set the running execution context's LexicalEnvironment to *oldEnv*.
9. Return Completion(UpdateEmpty(*C*, **undefined**)).

NOTE No matter how control leaves the embedded *Statement*, whether normally or by some form of abrupt completion or exception, the LexicalEnvironment is always restored to its former state.

13.12 The `switch` Statement

Syntax

SwitchStatement[Yield, Await, Return] :
  switch (*Expression*[+In, ?Yield, ?Await]) *CaseBlock*[?Yield, ?Await, ?Return]

CaseBlock[Yield, Await, Return] :
  { *CaseClauses*[?Yield, ?Await, ?Return]opt }
  { *CaseClauses*[?Yield, ?Await, ?Return]opt *DefaultClause*[?Yield, ?Await, ?Return]
    CaseClauses[?Yield, ?Await, ?Return]opt }

CaseClauses[Yield, Await, Return] :
  CaseClause[?Yield, ?Await, ?Return]
  CaseClauses[?Yield, ?Await, ?Return] *CaseClause*[?Yield, ?Await, ?Return]

CaseClause[Yield, Await, Return] :
  case *Expression*[+In, ?Yield, ?Await] : *StatementList*[?Yield, ?Await, ?Return]opt

DefaultClause[Yield, Await, Return] :
  default : *StatementList*[?Yield, ?Await, ?Return]opt

13.12.1 Static Semantics: Early Errors

SwitchStatement : **switch** (*Expression*) *CaseBlock*

- It is a Syntax Error if the LexicallyDeclaredNames of *CaseBlock* contains any duplicate entries.
- It is a Syntax Error if any element of the LexicallyDeclaredNames of *CaseBlock* also occurs in the VarDeclaredNames of *CaseBlock*.

13.12.2 Static Semantics: ContainsDuplicateLabels

With parameter *labelSet*.

SwitchStatement : **switch** (*Expression*) *CaseBlock*

1. Return ContainsDuplicateLabels of *CaseBlock* with argument *labelSet*.

CaseBlock : { }

1. Return **false**.

CaseBlock : { *CaseClauses*$_{opt}$ *DefaultClause* *CaseClauses*$_{opt}$ }

1. If the first *CaseClauses* is present, then
   a. Let *hasDuplicates* be ContainsDuplicateLabels of the first *CaseClauses* with argument *labelSet*.
   b. If *hasDuplicates* is **true**, return **true**.
2. Let *hasDuplicates* be ContainsDuplicateLabels of *DefaultClause* with argument *labelSet*.
3. If *hasDuplicates* is **true**, return **true**.
4. If the second *CaseClauses* is not present, return **false**.
5. Return ContainsDuplicateLabels of the second *CaseClauses* with argument *labelSet*.

CaseClauses : *CaseClauses* *CaseClause*

1. Let *hasDuplicates* be ContainsDuplicateLabels of *CaseClauses* with argument *labelSet*.
2. If *hasDuplicates* is **true**, return **true**.
3. Return ContainsDuplicateLabels of *CaseClause* with argument *labelSet*.

CaseClause : `case` *Expression* : $StatementList_{opt}$

1. If the *StatementList* is present, return ContainsDuplicateLabels of *StatementList* with argument *labelSet*.
2. Return **false**.

DefaultClause : `default` : $StatementList_{opt}$

1. If the *StatementList* is present, return ContainsDuplicateLabels of *StatementList* with argument *labelSet*.
2. Return **false**.

13.12.3 Static Semantics: ContainsUndefinedBreakTarget

With parameter *labelSet*.

SwitchStatement : `switch` `(` *Expression* `)` *CaseBlock*

1. Return ContainsUndefinedBreakTarget of *CaseBlock* with argument *labelSet*.

CaseBlock : `{` `}`

1. Return **false**.

CaseBlock : `{` $CaseClauses_{opt}$ *DefaultClause* $CaseClauses_{opt}$ `}`

1. If the first *CaseClauses* is present, then
    a. Let *hasUndefinedLabels* be ContainsUndefinedBreakTarget of the first *CaseClauses* with argument *labelSet*.
    b. If *hasUndefinedLabels* is **true**, return **true**.
2. Let *hasUndefinedLabels* be ContainsUndefinedBreakTarget of *DefaultClause* with argument *labelSet*.
3. If *hasUndefinedLabels* is **true**, return **true**.
4. If the second *CaseClauses* is not present, return **false**.
5. Return ContainsUndefinedBreakTarget of the second *CaseClauses* with argument *labelSet*.

CaseClauses : *CaseClauses* *CaseClause*

1. Let *hasUndefinedLabels* be ContainsUndefinedBreakTarget of *CaseClauses* with argument *labelSet*.
2. If *hasUndefinedLabels* is **true**, return **true**.
3. Return ContainsUndefinedBreakTarget of *CaseClause* with argument *labelSet*.

CaseClause : `case` *Expression* : $StatementList_{opt}$

1. If the *StatementList* is present, return ContainsUndefinedBreakTarget of *StatementList* with argument *labelSet*.
2. Return **false**.

DefaultClause : `default` : $StatementList_{opt}$

1. If the *StatementList* is present, return ContainsUndefinedBreakTarget of *StatementList* with argument *labelSet*.
2. Return **false**.

13.12.4 Static Semantics: ContainsUndefinedContinueTarget

With parameters *iterationSet* and *labelSet*.

SwitchStatement : **switch** (*Expression*) *CaseBlock*

1. Return ContainsUndefinedContinueTarget of *CaseBlock* with arguments *iterationSet* and « ».

CaseBlock : { }

1. Return **false**.

CaseBlock : { $CaseClauses_{opt}$ *DefaultClause* $CaseClauses_{opt}$ }

1. If the first *CaseClauses* is present, then
    a. Let *hasUndefinedLabels* be ContainsUndefinedContinueTarget of the first *CaseClauses* with arguments *iterationSet* and « ».
    b. If *hasUndefinedLabels* is **true**, return **true**.
2. Let *hasUndefinedLabels* be ContainsUndefinedContinueTarget of *DefaultClause* with arguments *iterationSet* and « ».
3. If *hasUndefinedLabels* is **true**, return **true**.
4. If the second *CaseClauses* is not present, return **false**.
5. Return ContainsUndefinedContinueTarget of the second *CaseClauses* with arguments *iterationSet* and « ».

CaseClauses : *CaseClauses* *CaseClause*

1. Let *hasUndefinedLabels* be ContainsUndefinedContinueTarget of *CaseClauses* with arguments *iterationSet* and « ».
2. If *hasUndefinedLabels* is **true**, return **true**.
3. Return ContainsUndefinedContinueTarget of *CaseClause* with arguments *iterationSet* and « ».

CaseClause : **case** *Expression* : $StatementList_{opt}$

1. If the *StatementList* is present, return ContainsUndefinedContinueTarget of *StatementList* with arguments *iterationSet* and « ».
2. Return **false**.

DefaultClause : **default** : $StatementList_{opt}$

1. If the *StatementList* is present, return ContainsUndefinedContinueTarget of *StatementList* with arguments *iterationSet* and « ».
2. Return **false**.

13.12.5 Static Semantics: LexicallyDeclaredNames

CaseBlock : { }

1. Return a new empty List.

CaseBlock : { $CaseClauses_{opt}$ *DefaultClause* $CaseClauses_{opt}$ }

1. If the first *CaseClauses* is present, let *names* be the LexicallyDeclaredNames of the first *CaseClauses*.
2. Else, let *names* be a new empty List.
3. Append to *names* the elements of the LexicallyDeclaredNames of *DefaultClause*.

4. If the second *CaseClauses* is not present, return *names*.
5. Return the result of appending to *names* the elements of the LexicallyDeclaredNames of the second *CaseClauses*.

CaseClauses : *CaseClauses* *CaseClause*

1. Let *names* be LexicallyDeclaredNames of *CaseClauses*.
2. Append to *names* the elements of the LexicallyDeclaredNames of *CaseClause*.
3. Return *names*.

CaseClause : **case** *Expression* : *StatementList*$_{opt}$

1. If the *StatementList* is present, return the LexicallyDeclaredNames of *StatementList*.
2. Return a new empty List.

DefaultClause : **default** : *StatementList*$_{opt}$

1. If the *StatementList* is present, return the LexicallyDeclaredNames of *StatementList*.
2. Return a new empty List.

13.12.6 Static Semantics: LexicallyScopedDeclarations

CaseBlock : **{ }**

1. Return a new empty List.

CaseBlock : **{** *CaseClauses*$_{opt}$ *DefaultClause* *CaseClauses*$_{opt}$ **}**

1. If the first *CaseClauses* is present, let *declarations* be the LexicallyScopedDeclarations of the first *CaseClauses*.
2. Else, let *declarations* be a new empty List.
3. Append to *declarations* the elements of the LexicallyScopedDeclarations of *DefaultClause*.
4. If the second *CaseClauses* is not present, return *declarations*.
5. Return the result of appending to *declarations* the elements of the LexicallyScopedDeclarations of the second *CaseClauses*.

CaseClauses : *CaseClauses* *CaseClause*

1. Let *declarations* be LexicallyScopedDeclarations of *CaseClauses*.
2. Append to *declarations* the elements of the LexicallyScopedDeclarations of *CaseClause*.
3. Return *declarations*.

CaseClause : **case** *Expression* : *StatementList*$_{opt}$

1. If the *StatementList* is present, return the LexicallyScopedDeclarations of *StatementList*.
2. Return a new empty List.

DefaultClause : **default** : *StatementList*$_{opt}$

1. If the *StatementList* is present, return the LexicallyScopedDeclarations of *StatementList*.
2. Return a new empty List.

13.12.7 Static Semantics: VarDeclaredNames

SwitchStatement : **switch** (*Expression*) *CaseBlock*

1. Return the VarDeclaredNames of *CaseBlock*.

CaseBlock : `{ }`

1. Return a new empty List.

CaseBlock : `{` *CaseClauses*$_{opt}$ *DefaultClause* *CaseClauses*$_{opt}$ `}`

1. If the first *CaseClauses* is present, let *names* be the VarDeclaredNames of the first *CaseClauses*.
2. Else, let *names* be a new empty List.
3. Append to *names* the elements of the VarDeclaredNames of *DefaultClause*.
4. If the second *CaseClauses* is not present, return *names*.
5. Return the result of appending to *names* the elements of the VarDeclaredNames of the second *CaseClauses*.

CaseClauses : *CaseClauses* *CaseClause*

1. Let *names* be VarDeclaredNames of *CaseClauses*.
2. Append to *names* the elements of the VarDeclaredNames of *CaseClause*.
3. Return *names*.

CaseClause : `case` *Expression* `:` *StatementList*$_{opt}$

1. If the *StatementList* is present, return the VarDeclaredNames of *StatementList*.
2. Return a new empty List.

DefaultClause : `default` `:` *StatementList*$_{opt}$

1. If the *StatementList* is present, return the VarDeclaredNames of *StatementList*.
2. Return a new empty List.

13.12.8 Static Semantics: VarScopedDeclarations

SwitchStatement : `switch` `(` *Expression* `)` *CaseBlock*

1. Return the VarScopedDeclarations of *CaseBlock*.

CaseBlock : `{ }`

1. Return a new empty List.

CaseBlock : `{` *CaseClauses*$_{opt}$ *DefaultClause* *CaseClauses*$_{opt}$ `}`

1. If the first *CaseClauses* is present, let *declarations* be the VarScopedDeclarations of the first *CaseClauses*.
2. Else, let *declarations* be a new empty List.
3. Append to *declarations* the elements of the VarScopedDeclarations of *DefaultClause*.
4. If the second *CaseClauses* is not present, return *declarations*.
5. Return the result of appending to *declarations* the elements of the VarScopedDeclarations of the second *CaseClauses*.

CaseClauses : *CaseClauses* *CaseClause*

1. Let *declarations* be VarScopedDeclarations of *CaseClauses*.
2. Append to *declarations* the elements of the VarScopedDeclarations of *CaseClause*.

3. Return *declarations*.

CaseClause : `case` *Expression* : *StatementList*$_{opt}$

1. If the *StatementList* is present, return the VarScopedDeclarations of *StatementList*.
2. Return a new empty List.

DefaultClause : `default` : *StatementList*$_{opt}$

1. If the *StatementList* is present, return the VarScopedDeclarations of *StatementList*.
2. Return a new empty List.

13.12.9 Runtime Semantics: CaseBlockEvaluation

With parameter *input*.

CaseBlock : `{ }`

1. Return NormalCompletion(**undefined**).

CaseBlock : `{` *CaseClauses* `}`

1. Let *V* be **undefined**.
2. Let *A* be the List of *CaseClause* items in *CaseClauses*, in source text order.
3. Let *found* be **false**.
4. For each *CaseClause* *C* in *A*, do
    a. If *found* is **false**, then
        i. Set *found* to ? CaseClauseIsSelected(*C*, *input*).
    b. If *found* is **true**, then
        i. Let *R* be the result of evaluating *C*.
        ii. If *R*.[[Value]] is not empty, set *V* to *R*.[[Value]].
        iii. If *R* is an abrupt completion, return Completion(UpdateEmpty(*R*, *V*)).
5. Return NormalCompletion(*V*).

CaseBlock : `{` *CaseClauses*$_{opt}$ *DefaultClause* *CaseClauses*$_{opt}$ `}`

1. Let *V* be **undefined**.
2. If the first *CaseClauses* is present, then
    a. Let *A* be the List of *CaseClause* items in the first *CaseClauses*, in source text order.
3. Else,
    a. Let *A* be « ».
4. Let *found* be **false**.
5. For each *CaseClause* *C* in *A*, do
    a. If *found* is **false**, then
        i. Set *found* to ? CaseClauseIsSelected(*C*, *input*).
    b. If *found* is **true**, then
        i. Let *R* be the result of evaluating *C*.
        ii. If *R*.[[Value]] is not empty, set *V* to *R*.[[Value]].
        iii. If *R* is an abrupt completion, return Completion(UpdateEmpty(*R*, *V*)).
6. Let *foundInB* be **false**.

7. If the second *CaseClauses* is present, then
    a. Let *B* be the List of *CaseClause* items in the second *CaseClauses*, in source text order.
8. Else,
    a. Let *B* be « ».
9. If *found* is **false**, then
    a. For each *CaseClause C* in *B*, do
        i. If *foundInB* is **false**, then
            1. Set *foundInB* to ? CaseClauseIsSelected(*C*, *input*).
        ii. If *foundInB* is **true**, then
            1. Let *R* be the result of evaluating *CaseClause C*.
            2. If *R*.[[Value]] is not empty, set *V* to *R*.[[Value]].
            3. If *R* is an abrupt completion, return Completion(UpdateEmpty(*R*, *V*)).
10. If *foundInB* is **true**, return NormalCompletion(*V*).
11. Let *R* be the result of evaluating *DefaultClause*.
12. If *R*.[[Value]] is not empty, set *V* to *R*.[[Value]].
13. If *R* is an abrupt completion, return Completion(UpdateEmpty(*R*, *V*)).
14. NOTE: The following is another complete iteration of the second *CaseClauses*.
15. For each *CaseClause C* in *B*, do
    a. Let *R* be the result of evaluating *CaseClause C*.
    b. If *R*.[[Value]] is not empty, set *V* to *R*.[[Value]].
    c. If *R* is an abrupt completion, return Completion(UpdateEmpty(*R*, *V*)).
16. Return NormalCompletion(*V*).

13.12.10 Runtime Semantics: CaseClauseIsSelected (*C*, *input*)

The abstract operation CaseClauseIsSelected, given *CaseClause C* and value *input*, determines whether *C* matches *input*.

1. Assert: *C* is an instance of the production *CaseClause* `:` `case` *Expression* `:` $StatementList_{opt}$.
2. Let *exprRef* be the result of evaluating the *Expression* of *C*.
3. Let *clauseSelector* be ? GetValue(*exprRef*).
4. Return the result of performing Strict Equality Comparison *input* === *clauseSelector*.

> NOTE This operation does not execute *C*'s *StatementList* (if any). The *CaseBlock* algorithm uses its return value to determine which *StatementList* to start executing.

13.12.11 Runtime Semantics: Evaluation

SwitchStatement `:` `switch` `(` *Expression* `)` *CaseBlock*

1. Let *exprRef* be the result of evaluating *Expression*.
2. Let *switchValue* be ? GetValue(*exprRef*).
3. Let *oldEnv* be the running execution context's LexicalEnvironment.
4. Let *blockEnv* be NewDeclarativeEnvironment(*oldEnv*).
5. Perform BlockDeclarationInstantiation(*CaseBlock*, *blockEnv*).
6. Set the running execution context's LexicalEnvironment to *blockEnv*.
7. Let *R* be CaseBlockEvaluation of *CaseBlock* with argument *switchValue*.
8. Set the running execution context's LexicalEnvironment to *oldEnv*.

9. Return *R*.

NOTE No matter how control leaves the *SwitchStatement* the LexicalEnvironment is always restored to its former state.

CaseClause : `case` *Expression* :

1. Return NormalCompletion(empty).

CaseClause : `case` *Expression* : *StatementList*

1. Return the result of evaluating *StatementList*.

DefaultClause : `default` :

1. Return NormalCompletion(empty).

DefaultClause : `default` : *StatementList*

1. Return the result of evaluating *StatementList*.

13.13 Labelled Statements

Syntax

LabelledStatement[Yield, Await, Return] :
LabelIdentifier[?Yield, ?Await] : *LabelledItem*[?Yield, ?Await, ?Return]

LabelledItem[Yield, Await, Return] :
Statement[?Yield, ?Await, ?Return]
FunctionDeclaration[?Yield, ?Await, ~Default]

NOTE A *Statement* may be prefixed by a label. Labelled statements are only used in conjunction with labelled **`break`** and **`continue`** statements. ECMAScript has no **`goto`** statement. A *Statement* can be part of a *LabelledStatement*, which itself can be part of a *LabelledStatement*, and so on. The labels introduced this way are collectively referred to as the "current label set" when describing the semantics of individual statements.

13.13.1 Static Semantics: Early Errors

LabelledItem : *FunctionDeclaration*

- It is a Syntax Error if any source text matches this rule.

NOTE An alternative definition for this rule is provided in B.3.2.

13.13.2 Static Semantics: ContainsDuplicateLabels

With parameter *labelSet*.

LabelledStatement : *LabelIdentifier* : *LabelledItem*

1. Let *label* be the StringValue of *LabelIdentifier*.
2. If *label* is an element of *labelSet*, return **true**.
3. Let *newLabelSet* be a copy of *labelSet* with *label* appended.
4. Return ContainsDuplicateLabels of *LabelledItem* with argument *newLabelSet*.

LabelledItem : *FunctionDeclaration*

1. Return **false**.

13.13.3 Static Semantics: ContainsUndefinedBreakTarget

With parameter *labelSet*.

LabelledStatement : *LabelIdentifier* : *LabelledItem*

1. Let *label* be the StringValue of *LabelIdentifier*.
2. Let *newLabelSet* be a copy of *labelSet* with *label* appended.
3. Return ContainsUndefinedBreakTarget of *LabelledItem* with argument *newLabelSet*.

LabelledItem : *FunctionDeclaration*

1. Return **false**.

13.13.4 Static Semantics: ContainsUndefinedContinueTarget

With parameters *iterationSet* and *labelSet*.

LabelledStatement : *LabelIdentifier* : *LabelledItem*

1. Let *label* be the StringValue of *LabelIdentifier*.
2. Let *newLabelSet* be a copy of *labelSet* with *label* appended.
3. Return ContainsUndefinedContinueTarget of *LabelledItem* with arguments *iterationSet* and *newLabelSet*.

LabelledItem : *FunctionDeclaration*

1. Return **false**.

13.13.5 Static Semantics: IsLabelledFunction (*stmt*)

The abstract operation IsLabelledFunction with argument *stmt* performs the following steps:

1. If *stmt* is not a *LabelledStatement*, return **false**.
2. Let *item* be the *LabelledItem* of *stmt*.
3. If *item* is *LabelledItem* : *FunctionDeclaration* , return **true**.
4. Let *subStmt* be the *Statement* of *item*.
5. Return IsLabelledFunction(*subStmt*).

13.13.6 Static Semantics: LexicallyDeclaredNames

LabelledStatement : *LabelIdentifier* : *LabelledItem*

1. Return the LexicallyDeclaredNames of *LabelledItem*.

LabelledItem : *Statement*

1. Return a new empty List.

LabelledItem : *FunctionDeclaration*

1. Return BoundNames of *FunctionDeclaration*.

13.13.7 Static Semantics: LexicallyScopedDeclarations

LabelledStatement : *LabelIdentifier* : *LabelledItem*

1. Return the LexicallyScopedDeclarations of *LabelledItem*.

LabelledItem : *Statement*

1. Return a new empty List.

LabelledItem : *FunctionDeclaration*

1. Return a new List containing *FunctionDeclaration*.

13.13.8 Static Semantics: TopLevelLexicallyDeclaredNames

LabelledStatement : *LabelIdentifier* : *LabelledItem*

1. Return a new empty List.

13.13.9 Static Semantics: TopLevelLexicallyScopedDeclarations

LabelledStatement : *LabelIdentifier* : *LabelledItem*

1. Return a new empty List.

13.13.10 Static Semantics: TopLevelVarDeclaredNames

LabelledStatement : *LabelIdentifier* : *LabelledItem*

1. Return the TopLevelVarDeclaredNames of *LabelledItem*.

LabelledItem : *Statement*

1. If *Statement* is *Statement* : *LabelledStatement* , return TopLevelVarDeclaredNames of *Statement*.
2. Return VarDeclaredNames of *Statement*.

LabelledItem : *FunctionDeclaration*

1. Return BoundNames of *FunctionDeclaration*.

13.13.11 Static Semantics: TopLevelVarScopedDeclarations

LabelledStatement : *LabelIdentifier* : *LabelledItem*

1. Return the TopLevelVarScopedDeclarations of *LabelledItem*.

LabelledItem : *Statement*

1. If *Statement* is *Statement* : *LabelledStatement* , return TopLevelVarScopedDeclarations of *Statement*.
2. Return VarScopedDeclarations of *Statement*.

LabelledItem : *FunctionDeclaration*

1. Return a new List containing *FunctionDeclaration*.

13.13.12 Static Semantics: VarDeclaredNames

LabelledStatement : *LabelIdentifier* : *LabelledItem*

1. Return the VarDeclaredNames of *LabelledItem*.

LabelledItem : *FunctionDeclaration*

1. Return a new empty List.

13.13.13 Static Semantics: VarScopedDeclarations

LabelledStatement : *LabelIdentifier* : *LabelledItem*

1. Return the VarScopedDeclarations of *LabelledItem*.

LabelledItem : *FunctionDeclaration*

1. Return a new empty List.

13.13.14 Runtime Semantics: LabelledEvaluation

With parameter *labelSet*.

LabelledStatement : *LabelIdentifier* : *LabelledItem*

1. Let *label* be the StringValue of *LabelIdentifier*.
2. Append *label* as an element of *labelSet*.
3. Let *stmtResult* be LabelledEvaluation of *LabelledItem* with argument *labelSet*.
4. If *stmtResult*.[[Type]] is break and SameValue(*stmtResult*.[[Target]], *label*) is **true**, then
    a. Set *stmtResult* to NormalCompletion(*stmtResult*.[[Value]]).
5. Return Completion(*stmtResult*).

LabelledItem : *Statement*

1. If *Statement* is either a *LabelledStatement* or a *BreakableStatement*, then
    a. Return LabelledEvaluation of *Statement* with argument *labelSet*.
2. Else,
    a. Return the result of evaluating *Statement*.

LabelledItem : *FunctionDeclaration*

1. Return the result of evaluating *FunctionDeclaration*.

13.13.15 Runtime Semantics: Evaluation

LabelledStatement : *LabelIdentifier* : *LabelledItem*

1. Let *newLabelSet* be a new empty List.
2. Return LabelledEvaluation of this *LabelledStatement* with argument *newLabelSet*.

13.14 The `throw` Statement

Syntax

ThrowStatement[Yield, Await] :
  throw [no *LineTerminator* here] *Expression*[+In, ?Yield, ?Await] ;

13.14.1 Runtime Semantics: Evaluation

ThrowStatement : **throw** *Expression* ;

1. Let *exprRef* be the result of evaluating *Expression*.
2. Let *exprValue* be ? GetValue(*exprRef*).
3. Return ThrowCompletion(*exprValue*).

13.15 The `try` Statement

Syntax

TryStatement[Yield, Await, Return] :
  try *Block*[?Yield, ?Await, ?Return] *Catch*[?Yield, ?Await, ?Return]
  try *Block*[?Yield, ?Await, ?Return] *Finally*[?Yield, ?Await, ?Return]
  try *Block*[?Yield, ?Await, ?Return] *Catch*[?Yield, ?Await, ?Return] *Finally*[?Yield, ?Await, ?Return]

Catch[Yield, Await, Return] :
  catch (*CatchParameter*[?Yield, ?Await]) *Block*[?Yield, ?Await, ?Return]
  catch *Block*[?Yield, ?Await, ?Return]

Finally[Yield, Await, Return] :
  finally *Block*[?Yield, ?Await, ?Return]

CatchParameter[Yield, Await] :
  BindingIdentifier[?Yield, ?Await]
  BindingPattern[?Yield, ?Await]

NOTE The **`try`** statement encloses a block of code in which an exceptional condition can occur, such as a runtime error or a **`throw`** statement. The **`catch`** clause provides the exception-handling code. When a catch clause catches an exception, its *CatchParameter* is bound to that exception.

13.15.1 Static Semantics: Early Errors

Catch **`: catch (`** *CatchParameter* **`)`** *Block*

- It is a Syntax Error if BoundNames of *CatchParameter* contains any duplicate elements.
- It is a Syntax Error if any element of the BoundNames of *CatchParameter* also occurs in the LexicallyDeclaredNames of *Block*.
- It is a Syntax Error if any element of the BoundNames of *CatchParameter* also occurs in the VarDeclaredNames of *Block*.

NOTE An alternative static semantics for this production is given in B.3.5.

13.15.2 Static Semantics: ContainsDuplicateLabels

With parameter *labelSet*.

TryStatement **`: try`** *Block* *Catch*

1. Let *hasDuplicates* be ContainsDuplicateLabels of *Block* with argument *labelSet*.
2. If *hasDuplicates* is **true**, return **true**.
3. Return ContainsDuplicateLabels of *Catch* with argument *labelSet*.

TryStatement **`: try`** *Block* *Finally*

1. Let *hasDuplicates* be ContainsDuplicateLabels of *Block* with argument *labelSet*.
2. If *hasDuplicates* is **true**, return **true**.
3. Return ContainsDuplicateLabels of *Finally* with argument *labelSet*.

TryStatement **`: try`** *Block* *Catch* *Finally*

1. Let *hasDuplicates* be ContainsDuplicateLabels of *Block* with argument *labelSet*.
2. If *hasDuplicates* is **true**, return **true**.
3. Let *hasDuplicates* be ContainsDuplicateLabels of *Catch* with argument *labelSet*.
4. If *hasDuplicates* is **true**, return **true**.
5. Return ContainsDuplicateLabels of *Finally* with argument *labelSet*.

Catch **`: catch (`** *CatchParameter* **`)`** *Block*

1. Return ContainsDuplicateLabels of *Block* with argument *labelSet*.

13.15.3 Static Semantics: ContainsUndefinedBreakTarget

With parameter *labelSet*.

TryStatement **`: try`** *Block* *Catch*

1. Let *hasUndefinedLabels* be ContainsUndefinedBreakTarget of *Block* with argument *labelSet*.
2. If *hasUndefinedLabels* is **true**, return **true**.
3. Return ContainsUndefinedBreakTarget of *Catch* with argument *labelSet*.

TryStatement : `try` *Block* *Finally*

1. Let *hasUndefinedLabels* be ContainsUndefinedBreakTarget of *Block* with argument *labelSet*.
2. If *hasUndefinedLabels* is **true**, return **true**.
3. Return ContainsUndefinedBreakTarget of *Finally* with argument *labelSet*.

TryStatement : `try` *Block* *Catch* *Finally*

1. Let *hasUndefinedLabels* be ContainsUndefinedBreakTarget of *Block* with argument *labelSet*.
2. If *hasUndefinedLabels* is **true**, return **true**.
3. Let *hasUndefinedLabels* be ContainsUndefinedBreakTarget of *Catch* with argument *labelSet*.
4. If *hasUndefinedLabels* is **true**, return **true**.
5. Return ContainsUndefinedBreakTarget of *Finally* with argument *labelSet*.

Catch : `catch` `(` *CatchParameter* `)` *Block*

1. Return ContainsUndefinedBreakTarget of *Block* with argument *labelSet*.

13.15.4 Static Semantics: ContainsUndefinedContinueTarget

With parameters *iterationSet* and *labelSet*.

TryStatement : `try` *Block* *Catch*

1. Let *hasUndefinedLabels* be ContainsUndefinedContinueTarget of *Block* with arguments *iterationSet* and « ».
2. If *hasUndefinedLabels* is **true**, return **true**.
3. Return ContainsUndefinedContinueTarget of *Catch* with arguments *iterationSet* and « ».

TryStatement : `try` *Block* *Finally*

1. Let *hasUndefinedLabels* be ContainsUndefinedContinueTarget of *Block* with arguments *iterationSet* and « ».
2. If *hasUndefinedLabels* is **true**, return **true**.
3. Return ContainsUndefinedContinueTarget of *Finally* with arguments *iterationSet* and « ».

TryStatement : `try` *Block* *Catch* *Finally*

1. Let *hasUndefinedLabels* be ContainsUndefinedContinueTarget of *Block* with arguments *iterationSet* and « ».
2. If *hasUndefinedLabels* is **true**, return **true**.
3. Let *hasUndefinedLabels* be ContainsUndefinedContinueTarget of *Catch* with arguments *iterationSet* and « ».
4. If *hasUndefinedLabels* is **true**, return **true**.
5. Return ContainsUndefinedContinueTarget of *Finally* with arguments *iterationSet* and « ».

Catch : `catch` `(` *CatchParameter* `)` *Block*

1. Return ContainsUndefinedContinueTarget of *Block* with arguments *iterationSet* and « ».

13.15.5 Static Semantics: VarDeclaredNames

TryStatement : `try` *Block* *Catch*

1. Let *names* be VarDeclaredNames of *Block*.
2. Append to *names* the elements of the VarDeclaredNames of *Catch*.
3. Return *names*.

TryStatement : `try` *Block* *Finally*

1. Let *names* be VarDeclaredNames of *Block*.
2. Append to *names* the elements of the VarDeclaredNames of *Finally*.
3. Return *names*.

TryStatement : `try` *Block* *Catch* *Finally*

1. Let *names* be VarDeclaredNames of *Block*.
2. Append to *names* the elements of the VarDeclaredNames of *Catch*.
3. Append to *names* the elements of the VarDeclaredNames of *Finally*.
4. Return *names*.

Catch : `catch` `(` *CatchParameter* `)` *Block*

1. Return the VarDeclaredNames of *Block*.

13.15.6 Static Semantics: VarScopedDeclarations

TryStatement : `try` *Block* *Catch*

1. Let *declarations* be VarScopedDeclarations of *Block*.
2. Append to *declarations* the elements of the VarScopedDeclarations of *Catch*.
3. Return *declarations*.

TryStatement : `try` *Block* *Finally*

1. Let *declarations* be VarScopedDeclarations of *Block*.
2. Append to *declarations* the elements of the VarScopedDeclarations of *Finally*.
3. Return *declarations*.

TryStatement : `try` *Block* *Catch* *Finally*

1. Let *declarations* be VarScopedDeclarations of *Block*.
2. Append to *declarations* the elements of the VarScopedDeclarations of *Catch*.
3. Append to *declarations* the elements of the VarScopedDeclarations of *Finally*.
4. Return *declarations*.

Catch : `catch` `(` *CatchParameter* `)` *Block*

1. Return the VarScopedDeclarations of *Block*.

13.15.7 Runtime Semantics: CatchClauseEvaluation

With parameter *thrownValue*.

Catch : `catch` `(` *CatchParameter* `)` *Block*

1. Let *oldEnv* be the running execution context's LexicalEnvironment.

2. Let *catchEnv* be NewDeclarativeEnvironment(*oldEnv*).
3. Let *catchEnvRec* be *catchEnv*'s EnvironmentRecord.
4. For each element *argName* of the BoundNames of *CatchParameter*, do
    a. Perform ! *catchEnvRec*.CreateMutableBinding(*argName*, **false**).
5. Set the running execution context's LexicalEnvironment to *catchEnv*.
6. Let *status* be BindingInitialization of *CatchParameter* with arguments *thrownValue* and *catchEnv*.
7. If *status* is an abrupt completion, then
    a. Set the running execution context's LexicalEnvironment to *oldEnv*.
    b. Return Completion(*status*).
8. Let *B* be the result of evaluating *Block*.
9. Set the running execution context's LexicalEnvironment to *oldEnv*.
10. Return Completion(*B*).

Catch : `catch` *Block*

1. Return the result of evaluating *Block*.

> NOTE No matter how control leaves the *Block* the LexicalEnvironment is always restored to its former state.

13.15.8 Runtime Semantics: Evaluation

TryStatement : `try` *Block* *Catch*

1. Let *B* be the result of evaluating *Block*.
2. If *B*.[[Type]] is throw, let *C* be CatchClauseEvaluation of *Catch* with argument *B*.[[Value]].
3. Else, let *C* be *B*.
4. Return Completion(UpdateEmpty(*C*, **undefined**)).

TryStatement : `try` *Block* *Finally*

1. Let *B* be the result of evaluating *Block*.
2. Let *F* be the result of evaluating *Finally*.
3. If *F*.[[Type]] is normal, set *F* to *B*.
4. Return Completion(UpdateEmpty(*F*, **undefined**)).

TryStatement : `try` *Block* *Catch* *Finally*

1. Let *B* be the result of evaluating *Block*.
2. If *B*.[[Type]] is throw, let *C* be CatchClauseEvaluation of *Catch* with argument *B*.[[Value]].
3. Else, let *C* be *B*.
4. Let *F* be the result of evaluating *Finally*.
5. If *F*.[[Type]] is normal, set *F* to *C*.
6. Return Completion(UpdateEmpty(*F*, **undefined**)).

13.16 The `debugger` Statement

Syntax

DebuggerStatement :
    debugger ;

13.16.1 Runtime Semantics: Evaluation

NOTE Evaluating a *DebuggerStatement* may allow an implementation to cause a breakpoint when run under a debugger. If a debugger is not present or active this statement has no observable effect.

DebuggerStatement : **debugger ;**

1. If an implementation-defined debugging facility is available and enabled, then
    a. Perform an implementation-defined debugging action.
    b. Let *result* be an implementation-defined Completion value.
2. Else,
    a. Let *result* be NormalCompletion(empty).
3. Return *result*.

14 ECMAScript Language: Functions and Classes

NOTE Various ECMAScript language elements cause the creation of ECMAScript function objects (9.2). Evaluation of such functions starts with the execution of their [[Call]] internal method (9.2.1).

14.1 Function Definitions

Syntax

FunctionDeclaration[Yield, Await, Default] :
    function *BindingIdentifier*[?Yield, ?Await] **(** *FormalParameters*[~Yield, ~Await] **) {**
        FunctionBody[~Yield, ~Await] **}**
    [+Default] **function (** *FormalParameters*[~Yield, ~Await] **) {** *FunctionBody*[~Yield, ~Await] **}**

FunctionExpression :
    function *BindingIdentifier*[~Yield, ~Await] opt **(** *FormalParameters*[~Yield, ~Await] **) {**
        FunctionBody[~Yield, ~Await] **}**

UniqueFormalParameters[Yield, Await] :
    FormalParameters[?Yield, ?Await]

FormalParameters[Yield, Await] :
    [empty]
    FunctionRestParameter[?Yield, ?Await]
    FormalParameterList[?Yield, ?Await]
    FormalParameterList[?Yield, ?Await] **,**

FormalParameterList[?Yield, ?Await] , *FunctionRestParameter*[?Yield, ?Await]

FormalParameterList[Yield, Await] :
FormalParameter[?Yield, ?Await]
FormalParameterList[?Yield, ?Await] , *FormalParameter*[?Yield, ?Await]

FunctionRestParameter[Yield, Await] :
BindingRestElement[?Yield, ?Await]

FormalParameter[Yield, Await] :
BindingElement[?Yield, ?Await]

FunctionBody[Yield, Await] :
FunctionStatementList[?Yield, ?Await]

FunctionStatementList[Yield, Await] :
StatementList[?Yield, ?Await, +Return] opt

14.1.1 Directive Prologues and the Use Strict Directive

A *Directive Prologue* is the longest sequence of *ExpressionStatement*s occurring as the initial *StatementListItem*s or *ModuleItem*s of a *FunctionBody*, a *ScriptBody*, or a *ModuleBody* and where each *ExpressionStatement* in the sequence consists entirely of a *StringLiteral* token followed by a semicolon. The semicolon may appear explicitly or may be inserted by automatic semicolon insertion. A Directive Prologue may be an empty sequence.

A *Use Strict Directive* is an *ExpressionStatement* in a Directive Prologue whose *StringLiteral* is either of the exact code point sequences **`"use strict"`** or **`'use strict'`**. A Use Strict Directive may not contain an *EscapeSequence* or *LineContinuation*.

A Directive Prologue may contain more than one Use Strict Directive. However, an implementation may issue a warning if this occurs.

> NOTE The *ExpressionStatement*s of a Directive Prologue are evaluated normally during evaluation of the containing production. Implementations may define implementation specific meanings for *ExpressionStatement*s which are not a Use Strict Directive and which occur in a Directive Prologue. If an appropriate notification mechanism exists, an implementation should issue a warning if it encounters in a Directive Prologue an *ExpressionStatement* that is not a Use Strict Directive and which does not have a meaning defined by the implementation.

14.1.2 Static Semantics: Early Errors

FunctionDeclaration : **function** *BindingIdentifier* (*FormalParameters*) { *FunctionBody* }
FunctionDeclaration : **function** (*FormalParameters*) { *FunctionBody* }
FunctionExpression : **function** *BindingIdentifier*opt (*FormalParameters*) { *FunctionBody* }

- If the source code matching *FormalParameters* is strict mode code, the Early Error rules for *UniqueFormalParameters* : *FormalParameters* are applied.
- If *BindingIdentifier* is present and the source code matching *BindingIdentifier* is strict mode code, it is a Syntax Error if the StringValue of *BindingIdentifier* is **"eval"** or **"arguments"**.

- It is a Syntax Error if ContainsUseStrict of *FunctionBody* is **true** and IsSimpleParameterList of *FormalParameters* is **false**.
- It is a Syntax Error if any element of the BoundNames of *FormalParameters* also occurs in the Lexically DeclaredNames of *FunctionBody*.
- It is a Syntax Error if *FormalParameters* Contains *SuperProperty* is **true**.
- It is a Syntax Error if *FunctionBody* Contains *SuperProperty* is **true**.
- It is a Syntax Error if *FormalParameters* Contains *SuperCall* is **true**.
- It is a Syntax Error if *FunctionBody* Contains *SuperCall* is **true**.

NOTE 1 The LexicallyDeclaredNames of a *FunctionBody* does not include identifiers bound using var or function declarations.

UniqueFormalParameters **:** *FormalParameters*

- It is a Syntax Error if BoundNames of *FormalParameters* contains any duplicate elements.

FormalParameters **:** *FormalParameterList*

- It is a Syntax Error if IsSimpleParameterList of *FormalParameterList* is **false** and BoundNames of *FormalParameterList* contains any duplicate elements.

NOTE 2 Multiple occurrences of the same *BindingIdentifier* in a *FormalParameterList* is only allowed for functions which have simple parameter lists and which are not defined in strict mode code.

FunctionBody **:** *FunctionStatementList*

- It is a Syntax Error if the LexicallyDeclaredNames of *FunctionStatementList* contains any duplicate entries.
- It is a Syntax Error if any element of the LexicallyDeclaredNames of *FunctionStatementList* also occurs in the VarDeclaredNames of *FunctionStatementList*.
- It is a Syntax Error if ContainsDuplicateLabels of *FunctionStatementList* with argument « » is **true**.
- It is a Syntax Error if ContainsUndefinedBreakTarget of *FunctionStatementList* with argument « » is **true**.
- It is a Syntax Error if ContainsUndefinedContinueTarget of *FunctionStatementList* with arguments « » and « » is **true**.

14.1.3 Static Semantics: BoundNames

FunctionDeclaration **:** `function` *BindingIdentifier* `(` *FormalParameters* `)` `{` *FunctionBody* `}`

1. Return the BoundNames of *BindingIdentifier*.

FunctionDeclaration **:** `function` `(` *FormalParameters* `)` `{` *FunctionBody* `}`

1. Return « **"*default*"** ».

NOTE **"*default*"** is used within this specification as a synthetic name for hoistable anonymous functions that are defined using export declarations.

FormalParameters **:** [empty]

1. Return a new empty List.

FormalParameters : *FormalParameterList* , *FunctionRestParameter*

1. Let *names* be BoundNames of *FormalParameterList*.
2. Append to *names* the BoundNames of *FunctionRestParameter*.
3. Return *names*.

FormalParameterList : *FormalParameterList* , *FormalParameter*

1. Let *names* be BoundNames of *FormalParameterList*.
2. Append to *names* the BoundNames of *FormalParameter*.
3. Return *names*.

14.1.4 Static Semantics: Contains

With parameter *symbol*.

FunctionDeclaration : **function** *BindingIdentifier* (*FormalParameters*) { *FunctionBody* }
FunctionDeclaration : **function** (*FormalParameters*) { *FunctionBody* }
FunctionExpression : **function** *BindingIdentifier*$_{opt}$ (*FormalParameters*) { *FunctionBody* }

1. Return **false**.

> NOTE Static semantic rules that depend upon substructure generally do not look into function definitions.

14.1.5 Static Semantics: ContainsDuplicateLabels

With parameter *labelSet*.

FunctionStatementList : [empty]

1. Return **false**.

14.1.6 Static Semantics: ContainsExpression

FormalParameters : [empty]

1. Return **false**.

FormalParameters : *FormalParameterList* , *FunctionRestParameter*

1. If ContainsExpression of *FormalParameterList* is **true**, return **true**.
2. Return ContainsExpression of *FunctionRestParameter*.

FormalParameterList : *FormalParameterList* , *FormalParameter*

1. If ContainsExpression of *FormalParameterList* is **true**, return **true**.
2. Return ContainsExpression of *FormalParameter*.

14.1.7 Static Semantics: ContainsUndefinedBreakTarget

With parameter *labelSet*.

FunctionStatementList : [empty]

1. Return **false**.

14.1.8 Static Semantics: ContainsUndefinedContinueTarget

With parameters *iterationSet* and *labelSet*.

FunctionStatementList : [empty]

1. Return **false**.

14.1.9 Static Semantics: ContainsUseStrict

FunctionBody : *FunctionStatementList*

1. If the Directive Prologue of *FunctionBody* contains a Use Strict Directive, return **true**; otherwise, return **false**.

14.1.10 Static Semantics: ExpectedArgumentCount

FormalParameters :
[empty]
FunctionRestParameter

1. Return 0.

FormalParameters : *FormalParameterList* , *FunctionRestParameter*

1. Return ExpectedArgumentCount of *FormalParameterList*.

NOTE The ExpectedArgumentCount of a *FormalParameterList* is the number of *FormalParameters* to the left of either the rest parameter or the first *FormalParameter* with an Initializer. A *FormalParameter* without an initializer is allowed after the first parameter with an initializer but such parameters are considered to be optional with **undefined** as their default value.

FormalParameterList : *FormalParameter*

1. If HasInitializer of *FormalParameter* is **true**, return 0.
2. Return 1.

FormalParameterList : *FormalParameterList* , *FormalParameter*

1. Let *count* be ExpectedArgumentCount of *FormalParameterList*.
2. If HasInitializer of *FormalParameterList* is **true** or HasInitializer of *FormalParameter* is **true**, return *count*.
3. Return *count* + 1.

14.1.11 Static Semantics: HasInitializer

FormalParameterList : *FormalParameterList* , *FormalParameter*

1. If HasInitializer of *FormalParameterList* is **true**, return **true**.

2. Return HasInitializer of *FormalParameter*.

14.1.12 Static Semantics: HasName

FunctionExpression : `function` (*FormalParameters*) { *FunctionBody* }

1. Return **false**.

FunctionExpression : `function` *BindingIdentifier* (*FormalParameters*) { *FunctionBody* }

1. Return **true**.

14.1.13 Static Semantics: IsAnonymousFunctionDefinition (*expr*)

The abstract operation IsAnonymousFunctionDefinition determines if its argument is a function definition that does not bind a name. The argument *expr* is the result of parsing an *AssignmentExpression* or *Initializer*. The following steps are taken:

1. If IsFunctionDefinition of *expr* is **false**, return **false**.
2. Let *hasName* be HasName of *expr*.
3. If *hasName* is **true**, return **false**.
4. Return **true**.

14.1.14 Static Semantics: IsConstantDeclaration

FunctionDeclaration : `function` *BindingIdentifier* (*FormalParameters*) { *FunctionBody* }
FunctionDeclaration : `function` (*FormalParameters*) { *FunctionBody* }

1. Return **false**.

14.1.15 Static Semantics: IsFunctionDefinition

FunctionExpression : `function` $BindingIdentifier_{opt}$ (*FormalParameters*) { *FunctionBody* }

1. Return **true**.

14.1.16 Static Semantics: IsSimpleParameterList

FormalParameters : [empty]

1. Return **true**.

FormalParameters : *FunctionRestParameter*

1. Return **false**.

FormalParameters : *FormalParameterList* , *FunctionRestParameter*

1. Return **false**.

FormalParameterList : *FormalParameterList* , *FormalParameter*

1. If IsSimpleParameterList of *FormalParameterList* is **false**, return **false**.
2. Return IsSimpleParameterList of *FormalParameter*.

FormalParameter : *BindingElement*

1. Return IsSimpleParameterList of *BindingElement*.

14.1.17 Static Semantics: LexicallyDeclaredNames

FunctionStatementList : [empty]

1. Return a new empty List.

FunctionStatementList : *StatementList*

1. Return TopLevelLexicallyDeclaredNames of *StatementList*.

14.1.18 Static Semantics: LexicallyScopedDeclarations

FunctionStatementList : [empty]

1. Return a new empty List.

FunctionStatementList : *StatementList*

1. Return the TopLevelLexicallyScopedDeclarations of *StatementList*.

14.1.19 Static Semantics: VarDeclaredNames

FunctionStatementList : [empty]

1. Return a new empty List.

FunctionStatementList : *StatementList*

1. Return TopLevelVarDeclaredNames of *StatementList*.

14.1.20 Static Semantics: VarScopedDeclarations

FunctionStatementList : [empty]

1. Return a new empty List.

FunctionStatementList : *StatementList*

1. Return the TopLevelVarScopedDeclarations of *StatementList*.

14.1.21 Runtime Semantics: EvaluateBody

With parameters *functionObject* and List *argumentsList*.

FunctionBody : *FunctionStatementList*

1. Perform ? FunctionDeclarationInstantiation(*functionObject*, *argumentsList*).
2. Return the result of evaluating *FunctionStatementList*.

14.1.22 Runtime Semantics: IteratorBindingInitialization

With parameters *iteratorRecord* and *environment*.

> NOTE When **undefined** is passed for *environment* it indicates that a PutValue operation should be used to assign the initialization value. This is the case for formal parameter lists of non-strict functions. In that case the formal parameter bindings are preinitialized in order to deal with the possibility of multiple parameters with the same name.

FormalParameters : [empty]

1. Return NormalCompletion(empty).

FormalParameters : *FormalParameterList* , *FunctionRestParameter*

1. Perform ? IteratorBindingInitialization for *FormalParameterList* using *iteratorRecord* and *environment* as the arguments.
2. Return the result of performing IteratorBindingInitialization for *FunctionRestParameter* using *iteratorRecord* and *environment* as the arguments.

FormalParameterList : *FormalParameterList* , *FormalParameter*

1. Perform ? IteratorBindingInitialization for *FormalParameterList* using *iteratorRecord* and *environment* as the arguments.
2. Return the result of performing IteratorBindingInitialization for *FormalParameter* using *iteratorRecord* and *environment* as the arguments.

FormalParameter : *BindingElement*

1. Return the result of performing IteratorBindingInitialization for *BindingElement* with arguments *iteratorRecord* and *environment*.

FunctionRestParameter : *BindingRestElement*

1. Return the result of performing IteratorBindingInitialization for *BindingRestElement* with arguments *iteratorRecord* and *environment*.

14.1.23 Runtime Semantics: InstantiateFunctionObject

With parameter *scope*.

FunctionDeclaration : `function` *BindingIdentifier* `(` *FormalParameters* `)` `{` *FunctionBody* `}`

1. Let *name* be StringValue of *BindingIdentifier*.
2. Let *F* be OrdinaryFunctionCreate(%Function.prototype%, *FormalParameters*, *FunctionBody*, non-lexical-this, *scope*).
3. Perform MakeConstructor(*F*).
4. Perform SetFunctionName(*F*, *name*).
5. Set *F*.[[SourceText]] to the source text matched by *FunctionDeclaration*.
6. Return *F*.

FunctionDeclaration : `function` `(` *FormalParameters* `)` `{` *FunctionBody* `}`

1. Let *F* be OrdinaryFunctionCreate(%Function.prototype%, *FormalParameters*, *FunctionBody*, non-lexical-this, *scope*).
2. Perform MakeConstructor(*F*).
3. Perform SetFunctionName(*F*, **"default"**).
4. Set *F*.[[SourceText]] to the source text matched by *FunctionDeclaration*.
5. Return *F*.

NOTE An anonymous *FunctionDeclaration* can only occur as part of an **`export default`** declaration, and its function code is therefore always strict mode code.

14.1.24 Runtime Semantics: NamedEvaluation

With parameter *name*.

FunctionExpression **`:`** **`function`** **`(`** *FormalParameters* **`)`** **`{`** *FunctionBody* **`}`**

1. Let *closure* be the result of evaluating this *FunctionExpression*.
2. Perform SetFunctionName(*closure*, *name*).
3. Return *closure*.

14.1.25 Runtime Semantics: Evaluation

FunctionDeclaration **`:`** **`function`** *BindingIdentifier* **`(`** *FormalParameters* **`)`** **`{`** *FunctionBody* **`}`**

1. Return NormalCompletion(empty).

NOTE 1 An alternative semantics is provided in B.3.3.

FunctionDeclaration **`:`** **`function`** **`(`** *FormalParameters* **`)`** **`{`** *FunctionBody* **`}`**

1. Return NormalCompletion(empty).

FunctionExpression **`:`** **`function`** **`(`** *FormalParameters* **`)`** **`{`** *FunctionBody* **`}`**

1. Let *scope* be the LexicalEnvironment of the running execution context.
2. Let *closure* be OrdinaryFunctionCreate(%Function.prototype%, *FormalParameters*, *FunctionBody*, non-lexical-this, *scope*).
3. Perform MakeConstructor(*closure*).
4. Set *closure*.[[SourceText]] to the source text matched by *FunctionExpression*.
5. Return *closure*.

FunctionExpression **`:`** **`function`** *BindingIdentifier* **`(`** *FormalParameters* **`)`** **`{`** *FunctionBody* **`}`**

1. Let *scope* be the running execution context's LexicalEnvironment.
2. Let *funcEnv* be NewDeclarativeEnvironment(*scope*).
3. Let *envRec* be *funcEnv*'s EnvironmentRecord.
4. Let *name* be StringValue of *BindingIdentifier*.
5. Perform *envRec*.CreateImmutableBinding(*name*, **false**).
6. Let *closure* be OrdinaryFunctionCreate(%Function.prototype%, *FormalParameters*, *FunctionBody*, non-lexical-this,

funcEnv).

7. Perform MakeConstructor(*closure*).
8. Perform SetFunctionName(*closure*, *name*).
9. Set *closure*.[[SourceText]] to the source text matched by *FunctionExpression*.
10. Perform *envRec*.InitializeBinding(*name*, *closure*).
11. Return *closure*.

NOTE 2 The *BindingIdentifier* in a *FunctionExpression* can be referenced from inside the *FunctionExpression*'s *FunctionBody* to allow the function to call itself recursively. However, unlike in a *FunctionDeclaration*, the *BindingIdentifier* in a *FunctionExpression* cannot be referenced from and does not affect the scope enclosing the *FunctionExpression*.

NOTE 3 A **"prototype"** property is automatically created for every function defined using a *FunctionDeclaration* or *FunctionExpression*, to allow for the possibility that the function will be used as a constructor.

FunctionStatementList : [empty]

1. Return NormalCompletion(**undefined**).

14.2 Arrow Function Definitions

Syntax

ArrowFunction[In, Yield, Await] :
  ArrowParameters[?Yield, ?Await] [no *LineTerminator* here] => *ConciseBody*[?In]

ArrowParameters[Yield, Await] :
  BindingIdentifier[?Yield, ?Await]
  CoverParenthesizedExpressionAndArrowParameterList[?Yield, ?Await]

ConciseBody[In] :
  [lookahead ≠ {] *ExpressionBody*[?In, ~Await]
  { *FunctionBody*[~Yield, ~Await] }

ExpressionBody[In, Await] :
  AssignmentExpression[?In, ~Yield, ?Await]

Supplemental Syntax

When the production
ArrowParameters[Yield, Await] : *CoverParenthesizedExpressionAndArrowParameterList*[?Yield, ?Await]
is recognized the following grammar is used to refine the interpretation of *CoverParenthesizedExpressionAndArrowParameterList*:

ArrowFormalParameters[Yield, Await] :

(*UniqueFormalParameters* `[?Yield, ?Await]`)

14.2.1 Static Semantics: Early Errors

ArrowFunction : *ArrowParameters* `=>` *ConciseBody*

- It is a Syntax Error if *ArrowParameters* Contains *YieldExpression* is **true**.
- It is a Syntax Error if *ArrowParameters* Contains *AwaitExpression* is **true**.
- It is a Syntax Error if ContainsUseStrict of *ConciseBody* is **true** and IsSimpleParameterList of *ArrowParameters* is **false**.
- It is a Syntax Error if any element of the BoundNames of *ArrowParameters* also occurs in the LexicallyDeclaredNames of *ConciseBody*.

ArrowParameters : *CoverParenthesizedExpressionAndArrowParameterList*

- It is a Syntax Error if *CoverParenthesizedExpressionAndArrowParameterList* is not covering an *ArrowFormalParameters*.
- All early error rules for *ArrowFormalParameters* and its derived productions also apply to CoveredFormalsList of *CoverParenthesizedExpressionAndArrowParameterList*.

14.2.2 Static Semantics: BoundNames

ArrowParameters : *CoverParenthesizedExpressionAndArrowParameterList*

1. Let *formals* be CoveredFormalsList of *CoverParenthesizedExpressionAndArrowParameterList*.
2. Return the BoundNames of *formals*.

14.2.3 Static Semantics: Contains

With parameter *symbol*.

ArrowFunction : *ArrowParameters* `=>` *ConciseBody*

1. If *symbol* is not one of *NewTarget*, *SuperProperty*, *SuperCall*, `super` or `this`, return **false**.
2. If *ArrowParameters* Contains *symbol* is **true**, return **true**.
3. Return *ConciseBody* Contains *symbol*.

> NOTE Normally, Contains does not look inside most function forms. However, Contains is used to detect `new.target`, `this`, and `super` usage within an *ArrowFunction*.

ArrowParameters : *CoverParenthesizedExpressionAndArrowParameterList*

1. Let *formals* be CoveredFormalsList of *CoverParenthesizedExpressionAndArrowParameterList*.
2. Return *formals* Contains *symbol*.

14.2.4 Static Semantics: ContainsExpression

ArrowParameters : *BindingIdentifier*

1. Return **false**.

ArrowParameters : *CoverParenthesizedExpressionAndArrowParameterList*

1. Let *formals* be CoveredFormalsList of *CoverParenthesizedExpressionAndArrowParameterList*.
2. Return ContainsExpression of *formals*.

14.2.5 Static Semantics: ContainsUseStrict

ConciseBody : *ExpressionBody*

1. Return **false**.

14.2.6 Static Semantics: ExpectedArgumentCount

ArrowParameters : *BindingIdentifier*

1. Return 1.

ArrowParameters : *CoverParenthesizedExpressionAndArrowParameterList*

1. Let *formals* be CoveredFormalsList of *CoverParenthesizedExpressionAndArrowParameterList*.
2. Return ExpectedArgumentCount of *formals*.

14.2.7 Static Semantics: HasName

ArrowFunction : *ArrowParameters* `=>` *ConciseBody*

1. Return **false**.

14.2.8 Static Semantics: IsSimpleParameterList

ArrowParameters : *BindingIdentifier*

1. Return **true**.

ArrowParameters : *CoverParenthesizedExpressionAndArrowParameterList*

1. Let *formals* be CoveredFormalsList of *CoverParenthesizedExpressionAndArrowParameterList*.
2. Return IsSimpleParameterList of *formals*.

14.2.9 Static Semantics: CoveredFormalsList

ArrowParameters : *BindingIdentifier*

1. Return this *ArrowParameters*.

CoverParenthesizedExpressionAndArrowParameterList :

`(` *Expression* `)`
`(` *Expression* `,` `)`
`(` `)`
`(` `...` *BindingIdentifier* `)`
`(` `...` *BindingPattern* `)`
`(` *Expression* `,` `...` *BindingIdentifier* `)`
`(` *Expression* `,` `...` *BindingPattern* `)`

1. Return the *ArrowFormalParameters* that is covered by *CoverParenthesizedExpressionAndArrowParameterList*.

14.2.10 Static Semantics: LexicallyDeclaredNames

ConciseBody : *ExpressionBody*

1. Return a new empty List.

14.2.11 Static Semantics: LexicallyScopedDeclarations

ConciseBody : *ExpressionBody*

1. Return a new empty List.

14.2.12 Static Semantics: VarDeclaredNames

ConciseBody : *ExpressionBody*

1. Return a new empty List.

14.2.13 Static Semantics: VarScopedDeclarations

ConciseBody : *ExpressionBody*

1. Return a new empty List.

14.2.14 Runtime Semantics: IteratorBindingInitialization

With parameters *iteratorRecord* and *environment*.

NOTE When **undefined** is passed for *environment* it indicates that a PutValue operation should be used to assign the initialization value. This is the case for formal parameter lists of non-strict functions. In that case the formal parameter bindings are preinitialized in order to deal with the possibility of multiple parameters with the same name.

ArrowParameters : *BindingIdentifier*

1. Assert: *iteratorRecord*.[[Done]] is **false**.
2. Let *next* be IteratorStep(*iteratorRecord*).
3. If *next* is an abrupt completion, set *iteratorRecord*.[[Done]] to **true**.
4. ReturnIfAbrupt(*next*).
5. If *next* is **false**, set *iteratorRecord*.[[Done]] to **true**.
6. Else,
    a. Let *v* be IteratorValue(*next*).
    b. If *v* is an abrupt completion, set *iteratorRecord*.[[Done]] to **true**.
    c. ReturnIfAbrupt(*v*).
7. If *iteratorRecord*.[[Done]] is **true**, let *v* be **undefined**.
8. Return the result of performing BindingInitialization for *BindingIdentifier* using *v* and *environment* as the arguments.

ArrowParameters : *CoverParenthesizedExpressionAndArrowParameterList*

1. Let *formals* be CoveredFormalsList of *CoverParenthesizedExpressionAndArrowParameterList*.
2. Return IteratorBindingInitialization of *formals* with arguments *iteratorRecord* and *environment*.

14.2.15 Runtime Semantics: EvaluateBody

With parameters *functionObject* and List *argumentsList*.

ConciseBody : *ExpressionBody*

1. Perform ? FunctionDeclarationInstantiation(*functionObject*, *argumentsList*).
2. Return the result of evaluating *ExpressionBody*.

14.2.16 Runtime Semantics: NamedEvaluation

With parameter *name*.

ArrowFunction : *ArrowParameters* `=>` *ConciseBody*

1. Let *closure* be the result of evaluating this *ArrowFunction*.
2. Perform SetFunctionName(*closure*, *name*).
3. Return *closure*.

14.2.17 Runtime Semantics: Evaluation

ArrowFunction : *ArrowParameters* `=>` *ConciseBody*

1. Let *scope* be the LexicalEnvironment of the running execution context.
2. Let *parameters* be CoveredFormalsList of *ArrowParameters*.
3. Let *closure* be OrdinaryFunctionCreate(%Function.prototype%, *parameters*, *ConciseBody*, lexical-this, *scope*).
4. Set *closure*.[[SourceText]] to the source text matched by *ArrowFunction*.
5. Return *closure*.

NOTE An *ArrowFunction* does not define local bindings for **`arguments`**, **`super`**, **`this`**, or **`new.target`**. Any reference to **`arguments`**, **`super`**, **`this`**, or **`new.target`** within an *ArrowFunction* must resolve to a binding in a lexically enclosing environment. Typically this will be the Function Environment of an immediately enclosing function. Even though an *ArrowFunction* may contain references to **`super`**, the function object created in step 3 is not made into a method by performing MakeMethod. An *ArrowFunction* that references **`super`** is always contained within a non-*ArrowFunction* and the necessary state to implement **`super`** is accessible via the *scope* that is captured by the function object of the *ArrowFunction*.

ExpressionBody : *AssignmentExpression*

1. Let *exprRef* be the result of evaluating *AssignmentExpression*.
2. Let *exprValue* be ? GetValue(*exprRef*).
3. Return Completion { [[Type]]: return, [[Value]]: *exprValue*, [[Target]]: empty }.

14.3 Method Definitions

Syntax

MethodDefinition[Yield, Await] :
  PropertyName[?Yield, ?Await] (*UniqueFormalParameters*[~Yield, ~Await]) {
    FunctionBody[~Yield, ~Await] }
  GeneratorMethod[?Yield, ?Await]
  AsyncMethod[?Yield, ?Await]
  AsyncGeneratorMethod[?Yield, ?Await]
  get *PropertyName*[?Yield, ?Await] ( ) { *FunctionBody*[~Yield, ~Await] }
  set *PropertyName*[?Yield, ?Await] (*PropertySetParameterList*) { *FunctionBody*[~Yield, ~Await] }

PropertySetParameterList :
  FormalParameter[~Yield, ~Await]

14.3.1 Static Semantics: Early Errors

MethodDefinition : *PropertyName* (*UniqueFormalParameters*) { *FunctionBody* }

- It is a Syntax Error if ContainsUseStrict of *FunctionBody* is **true** and IsSimpleParameterList of *UniqueFormalParameters* is **false**.
- It is a Syntax Error if any element of the BoundNames of *UniqueFormalParameters* also occurs in the Lexically DeclaredNames of *FunctionBody*.

MethodDefinition : **set** *PropertyName* (*PropertySetParameterList*) { *FunctionBody* }

- It is a Syntax Error if BoundNames of *PropertySetParameterList* contains any duplicate elements.
- It is a Syntax Error if ContainsUseStrict of *FunctionBody* is **true** and IsSimpleParameterList of *PropertySetParameterList* is **false**.
- It is a Syntax Error if any element of the BoundNames of *PropertySetParameterList* also occurs in the Lexically DeclaredNames of *FunctionBody*.

14.3.2 Static Semantics: ComputedPropertyContains

With parameter *symbol*.

MethodDefinition :
  PropertyName (*UniqueFormalParameters*) { *FunctionBody* }
  get *PropertyName* ( ) { *FunctionBody* }
  set *PropertyName* (*PropertySetParameterList*) { *FunctionBody* }

1. Return the result of ComputedPropertyContains for *PropertyName* with argument *symbol*.

14.3.3 Static Semantics: ExpectedArgumentCount

PropertySetParameterList : *FormalParameter*

1. If HasInitializer of *FormalParameter* is **true**, return 0.
2. Return 1.

14.3.4 Static Semantics: HasDirectSuper

MethodDefinition : *PropertyName* `(` *UniqueFormalParameters* `)` `{` *FunctionBody* `}`

1. If *UniqueFormalParameters* Contains *SuperCall* is **true**, return **true**.
2. Return *FunctionBody* Contains *SuperCall*.

MethodDefinition : `get` *PropertyName* `( )` `{` *FunctionBody* `}`

1. Return *FunctionBody* Contains *SuperCall*.

MethodDefinition : `set` *PropertyName* `(` *PropertySetParameterList* `)` `{` *FunctionBody* `}`

1. If *PropertySetParameterList* Contains *SuperCall* is **true**, return **true**.
2. Return *FunctionBody* Contains *SuperCall*.

14.3.5 Static Semantics: PropName

MethodDefinition :

PropertyName `(` *UniqueFormalParameters* `)` `{` *FunctionBody* `}`
`get` *PropertyName* `( )` `{` *FunctionBody* `}`
`set` *PropertyName* `(` *PropertySetParameterList* `)` `{` *FunctionBody* `}`

1. Return PropName of *PropertyName*.

14.3.6 Static Semantics: SpecialMethod

MethodDefinition : *PropertyName* `(` *UniqueFormalParameters* `)` `{` *FunctionBody* `}`

1. Return **false**.

MethodDefinition :

GeneratorMethod
AsyncMethod
AsyncGeneratorMethod
`get` *PropertyName* `( )` `{` *FunctionBody* `}`
`set` *PropertyName* `(` *PropertySetParameterList* `)` `{` *FunctionBody* `}`

1. Return **true**.

14.3.7 Runtime Semantics: DefineMethod

With parameter *object* and optional parameter *functionPrototype*.

MethodDefinition : *PropertyName* `(` *UniqueFormalParameters* `)` `{` *FunctionBody* `}`

1. Let *propKey* be the result of evaluating *PropertyName*.
2. ReturnIfAbrupt(*propKey*).
3. Let *scope* be the running execution context's LexicalEnvironment.
4. If *functionPrototype* is present as a parameter, then
   a. Let *prototype* be *functionPrototype*.
5. Else,
   a. Let *prototype* be %Function.prototype%.

6. Let *closure* be OrdinaryFunctionCreate(*prototype*, *UniqueFormalParameters*, *FunctionBody*, non-lexical-this, *scope*).
7. Perform MakeMethod(*closure*, *object*).
8. Set *closure*.[[SourceText]] to the source text matched by *MethodDefinition*.
9. Return the Record { [[Key]]: *propKey*, [[Closure]]: *closure* }.

14.3.8 Runtime Semantics: PropertyDefinitionEvaluation

With parameters *object* and *enumerable*.

MethodDefinition : *PropertyName* (*UniqueFormalParameters*) { *FunctionBody* }

1. Let *methodDef* be ? DefineMethod of *MethodDefinition* with argument *object*.
2. Perform SetFunctionName(*methodDef*.[[Closure]], *methodDef*.[[Key]]).
3. Let *desc* be the PropertyDescriptor { [[Value]]: *methodDef*.[[Closure]], [[Writable]]: **true**, [[Enumerable]]: *enumerable*, [[Configurable]]: **true** }.
4. Return ? DefinePropertyOrThrow(*object*, *methodDef*.[[Key]], *desc*).

MethodDefinition : **get** *PropertyName* ( ) { *FunctionBody* }

1. Let *propKey* be the result of evaluating *PropertyName*.
2. ReturnIfAbrupt(*propKey*).
3. Let *scope* be the running execution context's LexicalEnvironment.
4. Let *formalParameterList* be an instance of the production *FormalParameters* : [empty] .
5. Let *closure* be OrdinaryFunctionCreate(%Function.prototype%, *formalParameterList*, *FunctionBody*, non-lexical-this, *scope*).
6. Perform MakeMethod(*closure*, *object*).
7. Perform SetFunctionName(*closure*, *propKey*, **"get"**).
8. Set *closure*.[[SourceText]] to the source text matched by *MethodDefinition*.
9. Let *desc* be the PropertyDescriptor { [[Get]]: *closure*, [[Enumerable]]: *enumerable*, [[Configurable]]: **true** }.
10. Return ? DefinePropertyOrThrow(*object*, *propKey*, *desc*).

MethodDefinition : **set** *PropertyName* (*PropertySetParameterList*) { *FunctionBody* }

1. Let *propKey* be the result of evaluating *PropertyName*.
2. ReturnIfAbrupt(*propKey*).
3. Let *scope* be the running execution context's LexicalEnvironment.
4. Let *closure* be OrdinaryFunctionCreate(%Function.prototype%, *PropertySetParameterList*, *FunctionBody*, non-lexical-this, *scope*).
5. Perform MakeMethod(*closure*, *object*).
6. Perform SetFunctionName(*closure*, *propKey*, **"set"**).
7. Set *closure*.[[SourceText]] to the source text matched by *MethodDefinition*.
8. Let *desc* be the PropertyDescriptor { [[Set]]: *closure*, [[Enumerable]]: *enumerable*, [[Configurable]]: **true** }.
9. Return ? DefinePropertyOrThrow(*object*, *propKey*, *desc*).

14.4 Generator Function Definitions

Syntax

GeneratorMethod[Yield, Await] :

* *PropertyName*[?Yield, ?Await] (*UniqueFormalParameters*[+Yield, ~Await]) { *GeneratorBody* }

GeneratorDeclaration[Yield, Await, Default] :

function * *BindingIdentifier*[?Yield, ?Await] (*FormalParameters*[+Yield, ~Await]) { *GeneratorBody* }

[+Default] **function** * (*FormalParameters*[+Yield, ~Await]) { *GeneratorBody* }

GeneratorExpression :

function * *BindingIdentifier*[+Yield, ~Await] opt (*FormalParameters*[+Yield, ~Await]) { *GeneratorBody* }

GeneratorBody :

FunctionBody[+Yield, ~Await]

YieldExpression[In, Await] :

yield

yield [no *LineTerminator* here] *AssignmentExpression*[?In, +Yield, ?Await]

yield [no *LineTerminator* here] * *AssignmentExpression*[?In, +Yield, ?Await]

NOTE 1 The syntactic context immediately following **yield** requires use of the *InputElementRegExpOrTemplateTail* lexical goal.

NOTE 2 *YieldExpression* cannot be used within the *FormalParameters* of a generator function because any expressions that are part of *FormalParameters* are evaluated before the resulting generator object is in a resumable state.

NOTE 3 Abstract operations relating to generator objects are defined in 25.4.3.

14.4.1 Static Semantics: Early Errors

GeneratorMethod : * *PropertyName* (*UniqueFormalParameters*) { *GeneratorBody* }

- It is a Syntax Error if HasDirectSuper of *GeneratorMethod* is **true**.
- It is a Syntax Error if *UniqueFormalParameters* Contains *YieldExpression* is **true**.
- It is a Syntax Error if ContainsUseStrict of *GeneratorBody* is **true** and IsSimpleParameterList of *UniqueFormalParameters* is **false**.
- It is a Syntax Error if any element of the BoundNames of *UniqueFormalParameters* also occurs in the LexicallyDeclaredNames of *GeneratorBody*.

GeneratorDeclaration : **function** * *BindingIdentifier* (*FormalParameters*) { *GeneratorBody* }
GeneratorDeclaration : **function** * (*FormalParameters*) { *GeneratorBody* }
GeneratorExpression : **function** * *BindingIdentifier*opt (*FormalParameters*) { *GeneratorBody* }

- If the source code matching *FormalParameters* is strict mode code, the Early Error rules for *UniqueFormalParameters* : *FormalParameters* are applied.
- If *BindingIdentifier* is present and the source code matching *BindingIdentifier* is strict mode code, it is a Syntax Error if the StringValue of *BindingIdentifier* is **"eval"** or **"arguments"**.
- It is a Syntax Error if ContainsUseStrict of *GeneratorBody* is **true** and IsSimpleParameterList of *FormalParameters*

is **false**.

- It is a Syntax Error if any element of the BoundNames of *FormalParameters* also occurs in the LexicallyDeclaredNames of *GeneratorBody*.
- It is a Syntax Error if *FormalParameters* Contains *YieldExpression* is **true**.
- It is a Syntax Error if *FormalParameters* Contains *SuperProperty* is **true**.
- It is a Syntax Error if *GeneratorBody* Contains *SuperProperty* is **true**.
- It is a Syntax Error if *FormalParameters* Contains *SuperCall* is **true**.
- It is a Syntax Error if *GeneratorBody* Contains *SuperCall* is **true**.

14.4.2 Static Semantics: BoundNames

GeneratorDeclaration `:` `function` `*` *BindingIdentifier* `(` *FormalParameters* `)` `{` *GeneratorBody* `}`

1. Return the BoundNames of *BindingIdentifier*.

GeneratorDeclaration `:` `function` `*` `(` *FormalParameters* `)` `{` *GeneratorBody* `}`

1. Return « **"*default*"** ».

NOTE **"*default*"** is used within this specification as a synthetic name for hoistable anonymous functions that are defined using export declarations.

14.4.3 Static Semantics: ComputedPropertyContains

With parameter *symbol*.

GeneratorMethod `:` `*` *PropertyName* `(` *UniqueFormalParameters* `)` `{` *GeneratorBody* `}`

1. Return the result of ComputedPropertyContains for *PropertyName* with argument *symbol*.

14.4.4 Static Semantics: Contains

With parameter *symbol*.

GeneratorDeclaration `:` `function` `*` *BindingIdentifier* `(` *FormalParameters* `)` `{` *GeneratorBody* `}`
GeneratorDeclaration `:` `function` `*` `(` *FormalParameters* `)` `{` *GeneratorBody* `}`
GeneratorExpression `:` `function` `*` *BindingIdentifier*$_{opt}$ `(` *FormalParameters* `)` `{` *GeneratorBody* `}`

1. Return **false**.

NOTE Static semantic rules that depend upon substructure generally do not look into function definitions.

14.4.5 Static Semantics: HasDirectSuper

GeneratorMethod `:` `*` *PropertyName* `(` *UniqueFormalParameters* `)` `{` *GeneratorBody* `}`

1. If *UniqueFormalParameters* Contains *SuperCall* is **true**, return **true**.
2. Return *GeneratorBody* Contains *SuperCall*.

14.4.6 Static Semantics: HasName

GeneratorExpression : `function` `*` `(` *FormalParameters* `)` `{` *GeneratorBody* `}`

1. Return **false**.

GeneratorExpression : `function` `*` *BindingIdentifier* `(` *FormalParameters* `)` `{` *GeneratorBody* `}`

1. Return **true**.

14.4.7 Static Semantics: IsConstantDeclaration

GeneratorDeclaration : `function` `*` *BindingIdentifier* `(` *FormalParameters* `)` `{` *GeneratorBody* `}`
GeneratorDeclaration : `function` `*` `(` *FormalParameters* `)` `{` *GeneratorBody* `}`

1. Return **false**.

14.4.8 Static Semantics: IsFunctionDefinition

GeneratorExpression : `function` `*` *BindingIdentifier*$_{\text{opt}}$ `(` *FormalParameters* `)` `{` *GeneratorBody* `}`

1. Return **true**.

14.4.9 Static Semantics: PropName

GeneratorMethod : `*` *PropertyName* `(` *UniqueFormalParameters* `)` `{` *GeneratorBody* `}`

1. Return PropName of *PropertyName*.

14.4.10 Runtime Semantics: EvaluateBody

With parameters *functionObject* and List *argumentsList*.

GeneratorBody : *FunctionBody*

1. Perform ? FunctionDeclarationInstantiation(*functionObject*, *argumentsList*).
2. Let *G* be ? OrdinaryCreateFromConstructor(*functionObject*, **"%Generator.prototype%"**, « [[GeneratorState]], [[GeneratorContext]] »).
3. Perform GeneratorStart(*G*, *FunctionBody*).
4. Return Completion { [[Type]]: return, [[Value]]: *G*, [[Target]]: empty }.

14.4.11 Runtime Semantics: InstantiateFunctionObject

With parameter *scope*.

GeneratorDeclaration : `function` `*` *BindingIdentifier* `(` *FormalParameters* `)` `{` *GeneratorBody* `}`

1. Let *name* be StringValue of *BindingIdentifier*.
2. Let *F* be OrdinaryFunctionCreate(%Generator%, *FormalParameters*, *GeneratorBody*, non-lexical-this, *scope*).
3. Let *prototype* be OrdinaryObjectCreate(%Generator.prototype%).
4. Perform DefinePropertyOrThrow(*F*, **"prototype"**, PropertyDescriptor { [[Value]]: *prototype*, [[Writable]]: **true**, [[Enumerable]]: **false**, [[Configurable]]: **false** }).
5. Perform SetFunctionName(*F*, *name*).

6. Set *F*.[[SourceText]] to the source text matched by *GeneratorDeclaration*.
7. Return *F*.

GeneratorDeclaration : `function *` (*FormalParameters*) { *GeneratorBody* }

1. Let *F* be OrdinaryFunctionCreate(%Generator%, *FormalParameters*, *GeneratorBody*, non-lexical-this, *scope*).
2. Let *prototype* be OrdinaryObjectCreate(%Generator.prototype%).
3. Perform DefinePropertyOrThrow(*F*, **"prototype"**, PropertyDescriptor { [[Value]]: *prototype*, [[Writable]]: **true**, [[Enumerable]]: **false**, [[Configurable]]: **false** }).
4. Perform SetFunctionName(*F*, **"default"**).
5. Set *F*.[[SourceText]] to the source text matched by *GeneratorDeclaration*.
6. Return *F*.

NOTE An anonymous *GeneratorDeclaration* can only occur as part of an **`export default`** declaration, and its function code is therefore always strict mode code.

14.4.12 Runtime Semantics: PropertyDefinitionEvaluation

With parameters *object* and *enumerable*.

GeneratorMethod : `*` *PropertyName* (*UniqueFormalParameters*) { *GeneratorBody* }

1. Let *propKey* be the result of evaluating *PropertyName*.
2. ReturnIfAbrupt(*propKey*).
3. Let *scope* be the running execution context's LexicalEnvironment.
4. Let *closure* be OrdinaryFunctionCreate(%Generator%, *UniqueFormalParameters*, *GeneratorBody*, non-lexical-this, *scope*).
5. Perform MakeMethod(*closure*, *object*).
6. Let *prototype* be OrdinaryObjectCreate(%Generator.prototype%).
7. Perform DefinePropertyOrThrow(*closure*, **"prototype"**, PropertyDescriptor { [[Value]]: *prototype*, [[Writable]]: **true**, [[Enumerable]]: **false**, [[Configurable]]: **false** }).
8. Perform SetFunctionName(*closure*, *propKey*).
9. Set *closure*.[[SourceText]] to the source text matched by *GeneratorMethod*.
10. Let *desc* be the PropertyDescriptor { [[Value]]: *closure*, [[Writable]]: **true**, [[Enumerable]]: *enumerable*, [[Configurable]]: **true** }.
11. Return ? DefinePropertyOrThrow(*object*, *propKey*, *desc*).

14.4.13 Runtime Semantics: NamedEvaluation

With parameter *name*.

GeneratorExpression : `function *` (*FormalParameters*) { *GeneratorBody* }

1. Let *closure* be the result of evaluating this *GeneratorExpression*.
2. Perform SetFunctionName(*closure*, *name*).
3. Return *closure*.

14.4.14 Runtime Semantics: Evaluation

GeneratorExpression : `function *` `(` *FormalParameters* `)` `{` *GeneratorBody* `}`

1. Let *scope* be the LexicalEnvironment of the running execution context.
2. Let *closure* be OrdinaryFunctionCreate(%Generator%, *FormalParameters*, *GeneratorBody*, non-lexical-this, *scope*).
3. Let *prototype* be OrdinaryObjectCreate(%Generator.prototype%).
4. Perform DefinePropertyOrThrow(*closure*, **"prototype"**, PropertyDescriptor { [[Value]]: *prototype*, [[Writable]]: **true**, [[Enumerable]]: **false**, [[Configurable]]: **false** }).
5. Set *closure*.[[SourceText]] to the source text matched by *GeneratorExpression*.
6. Return *closure*.

GeneratorExpression : `function *` *BindingIdentifier* `(` *FormalParameters* `)` `{` *GeneratorBody* `}`

1. Let *scope* be the running execution context's LexicalEnvironment.
2. Let *funcEnv* be NewDeclarativeEnvironment(*scope*).
3. Let *envRec* be *funcEnv*'s EnvironmentRecord.
4. Let *name* be StringValue of *BindingIdentifier*.
5. Perform *envRec*.CreateImmutableBinding(*name*, **false**).
6. Let *closure* be OrdinaryFunctionCreate(%Generator%, *FormalParameters*, *GeneratorBody*, non-lexical-this, *funcEnv*).
7. Let *prototype* be OrdinaryObjectCreate(%Generator.prototype%).
8. Perform DefinePropertyOrThrow(*closure*, **"prototype"**, PropertyDescriptor { [[Value]]: *prototype*, [[Writable]]: **true**, [[Enumerable]]: **false**, [[Configurable]]: **false** }).
9. Perform SetFunctionName(*closure*, *name*).
10. Perform *envRec*.InitializeBinding(*name*, *closure*).
11. Set *closure*.[[SourceText]] to the source text matched by *GeneratorExpression*.
12. Return *closure*.

NOTE The *BindingIdentifier* in a *GeneratorExpression* can be referenced from inside the *GeneratorExpression*'s *FunctionBody* to allow the generator code to call itself recursively. However, unlike in a *GeneratorDeclaration*, the *BindingIdentifier* in a *GeneratorExpression* cannot be referenced from and does not affect the scope enclosing the *GeneratorExpression*.

YieldExpression : `yield`

1. Let *generatorKind* be ! GetGeneratorKind().
2. If *generatorKind* is async, then return ? AsyncGeneratorYield(**undefined**).
3. Otherwise, return ? GeneratorYield(CreateIterResultObject(**undefined**, **false**)).

YieldExpression : `yield` *AssignmentExpression*

1. Let *generatorKind* be ! GetGeneratorKind().
2. Let *exprRef* be the result of evaluating *AssignmentExpression*.
3. Let *value* be ? GetValue(*exprRef*).
4. If *generatorKind* is async, then return ? AsyncGeneratorYield(*value*).
5. Otherwise, return ? GeneratorYield(CreateIterResultObject(*value*, **false**)).

YieldExpression : `yield *` *AssignmentExpression*

1. Let *generatorKind* be ! GetGeneratorKind().
2. Let *exprRef* be the result of evaluating *AssignmentExpression*.

3. Let *value* be ? GetValue(*exprRef*).
4. Let *iteratorRecord* be ? GetIterator(*value*, *generatorKind*).
5. Let *iterator* be *iteratorRecord*.[[Iterator]].
6. Let *received* be NormalCompletion(**undefined**).
7. Repeat,
    a. If *received*.[[Type]] is normal, then
        i. Let *innerResult* be ? Call(*iteratorRecord*.[[NextMethod]], *iteratorRecord*.[[Iterator]], « *received*.[[Value]] »).
        ii. If *generatorKind* is async, then set *innerResult* to ? Await(*innerResult*).
        iii. If Type(*innerResult*) is not Object, throw a **TypeError** exception.
        iv. Let *done* be ? IteratorComplete(*innerResult*).
        v. If *done* is **true**, then
            1. Return ? IteratorValue(*innerResult*).
        vi. If *generatorKind* is async, then set *received* to AsyncGeneratorYield(? IteratorValue(*innerResult*)).
        vii. Else, set *received* to GeneratorYield(*innerResult*).
    b. Else if *received*.[[Type]] is throw, then
        i. Let *throw* be ? GetMethod(*iterator*, **"throw"**).
        ii. If *throw* is not **undefined**, then
            1. Let *innerResult* be ? Call(*throw*, *iterator*, « *received*.[[Value]] »).
            2. If *generatorKind* is async, then set *innerResult* to ? Await(*innerResult*).
            3. NOTE: Exceptions from the inner iterator **`throw`** method are propagated. Normal completions from an inner **`throw`** method are processed similarly to an inner **`next`**.
            4. If Type(*innerResult*) is not Object, throw a **TypeError** exception.
            5. Let *done* be ? IteratorComplete(*innerResult*).
            6. If *done* is **true**, then
                a. Return ? IteratorValue(*innerResult*).
            7. If *generatorKind* is async, then set *received* to AsyncGeneratorYield(? IteratorValue(*innerResult*)).
            8. Else, set *received* to GeneratorYield(*innerResult*).
        iii. Else,
            1. NOTE: If *iterator* does not have a **`throw`** method, this throw is going to terminate the **`yield*`** loop. But first we need to give *iterator* a chance to clean up.
            2. Let *closeCompletion* be Completion { [[Type]]: normal, [[Value]]: empty, [[Target]]: empty }.
            3. If *generatorKind* is async, perform ? AsyncIteratorClose(*iteratorRecord*, *closeCompletion*).
            4. Else, perform ? IteratorClose(*iteratorRecord*, *closeCompletion*).
            5. NOTE: The next step throws a **TypeError** to indicate that there was a **`yield*`** protocol violation: *iterator* does not have a **`throw`** method.
            6. Throw a **TypeError** exception.
    c. Else,
        i. Assert: *received*.[[Type]] is return.
        ii. Let *return* be ? GetMethod(*iterator*, **"return"**).
        iii. If *return* is **undefined**, then
            1. If *generatorKind* is async, then set *received*.[[Value]] to ? Await(*received*.[[Value]]).
            2. Return Completion(*received*).
        iv. Let *innerReturnResult* be ? Call(*return*, *iterator*, « *received*.[[Value]] »).
        v. If *generatorKind* is async, then set *innerReturnResult* to ? Await(*innerReturnResult*).
        vi. If Type(*innerReturnResult*) is not Object, throw a **TypeError** exception.

vii. Let *done* be ? IteratorComplete(*innerReturnResult*).
viii. If *done* is **true**, then
    1. Let *value* be ? IteratorValue(*innerReturnResult*).
    2. Return Completion { [[Type]]: return, [[Value]]: *value*, [[Target]]: empty }.
ix. If *generatorKind* is async, then set *received* to AsyncGeneratorYield(? IteratorValue(*innerReturnResult*)).
x. Else, set *received* to GeneratorYield(*innerReturnResult*).

14.5 Async Generator Function Definitions

Syntax

AsyncGeneratorMethod[Yield, Await] :
    async [no *LineTerminator* here] * *PropertyName*[?Yield, ?Await] (
        UniqueFormalParameters[+Yield, +Await]) { *AsyncGeneratorBody* }

AsyncGeneratorDeclaration[Yield, Await, Default] :
    async [no *LineTerminator* here] **function** * *BindingIdentifier*[?Yield, ?Await] (
        FormalParameters[+Yield, +Await]) { *AsyncGeneratorBody* }
    [+Default] **async** [no *LineTerminator* here] **function** * (*FormalParameters*[+Yield, +Await]) {
        AsyncGeneratorBody }

AsyncGeneratorExpression :
    async [no *LineTerminator* here] **function** * *BindingIdentifier*[+Yield, +Await] opt (
        FormalParameters[+Yield, +Await]) { *AsyncGeneratorBody* }

AsyncGeneratorBody :
    FunctionBody[+Yield, +Await]

NOTE 1 *YieldExpression* and *AwaitExpression* cannot be used within the *FormalParameters* of an async generator function because any expressions that are part of *FormalParameters* are evaluated before the resulting async generator object is in a resumable state.

NOTE 2 Abstract operations relating to async generator objects are defined in 25.5.3.

14.5.1 Static Semantics: Early Errors

AsyncGeneratorMethod : **async** * *PropertyName* (*UniqueFormalParameters*) { *AsyncGeneratorBody* }

- It is a Syntax Error if HasDirectSuper of *AsyncGeneratorMethod* is **true**.
- It is a Syntax Error if *UniqueFormalParameters* Contains *YieldExpression* is **true**.
- It is a Syntax Error if *UniqueFormalParameters* Contains *AwaitExpression* is **true**.
- It is a Syntax Error if ContainsUseStrict of *AsyncGeneratorBody* is **true** and IsSimpleParameterList of *UniqueFormalParameters* is **false**.
- It is a Syntax Error if any element of the BoundNames of *UniqueFormalParameters* also occurs in the LexicallyDeclaredNames of *AsyncGeneratorBody*.

AsyncGeneratorDeclaration : **async function** * *BindingIdentifier* (*FormalParameters*) { *AsyncGeneratorBody* }
AsyncGeneratorDeclaration : **async function** * (*FormalParameters*) { *AsyncGeneratorBody* }
AsyncGeneratorExpression : **async function** * *BindingIdentifier*$_{opt}$ (*FormalParameters*) { *AsyncGeneratorBody* }

- If the source code matching *FormalParameters* is strict mode code, the Early Error rules for *UniqueFormalParameters* : *FormalParameters* are applied.
- If *BindingIdentifier* is present and the source code matching *BindingIdentifier* is strict mode code, it is a Syntax Error if the StringValue of *BindingIdentifier* is **"eval"** or **"arguments"**.
- It is a Syntax Error if ContainsUseStrict of *AsyncGeneratorBody* is **true** and IsSimpleParameterList of *FormalParameters* is **false**.
- It is a Syntax Error if any element of the BoundNames of *FormalParameters* also occurs in the LexicallyDeclaredNames of *AsyncGeneratorBody*.
- It is a Syntax Error if *FormalParameters* Contains *YieldExpression* is **true**.
- It is a Syntax Error if *FormalParameters* Contains *AwaitExpression* is **true**.
- It is a Syntax Error if *FormalParameters* Contains *SuperProperty* is **true**.
- It is a Syntax Error if *AsyncGeneratorBody* Contains *SuperProperty* is **true**.
- It is a Syntax Error if *FormalParameters* Contains *SuperCall* is **true**.
- It is a Syntax Error if *AsyncGeneratorBody* Contains *SuperCall* is **true**.

14.5.2 Static Semantics: BoundNames

AsyncGeneratorDeclaration : **async function** * *BindingIdentifier* (*FormalParameters*) { *AsyncGeneratorBody* }

1. Return the BoundNames of *BindingIdentifier*.

AsyncGeneratorDeclaration : **async function** * (*FormalParameters*) { *AsyncGeneratorBody* }

1. Return « **"*default*"** ».

NOTE **"*default*"** is used within this specification as a synthetic name for hoistable anonymous functions that are defined using export declarations.

14.5.3 Static Semantics: ComputedPropertyContains

With parameter *symbol*.

AsyncGeneratorMethod : **async** * *PropertyName* (*UniqueFormalParameters*) { *AsyncGeneratorBody* }

1. Return the result of ComputedPropertyContains for *PropertyName* with argument *symbol*.

14.5.4 Static Semantics: Contains

With parameter *symbol*.

AsyncGeneratorDeclaration : **async function** * *BindingIdentifier* (*FormalParameters*) { *AsyncGeneratorBody* }
AsyncGeneratorDeclaration : **async function** * (*FormalParameters*) { *AsyncGeneratorBody* }
AsyncGeneratorExpression : **async function** * *BindingIdentifier*$_{opt}$ (*FormalParameters*) { *AsyncGeneratorBody* }

1. Return **false**.

NOTE Static semantic rules that depend upon substructure generally do not look into function definitions.

14.5.5 Static Semantics: HasDirectSuper

AsyncGeneratorMethod : `async` * *PropertyName* (*UniqueFormalParameters*) { *AsyncGeneratorBody* }

1. If *UniqueFormalParameters* Contains *SuperCall* is **true**, return **true**.
2. Return *AsyncGeneratorBody* Contains *SuperCall*.

14.5.6 Static Semantics: HasName

AsyncGeneratorExpression : `async function` * (*FormalParameters*) { *AsyncGeneratorBody* }

1. Return **false**.

AsyncGeneratorExpression : `async function` * *BindingIdentifier* (*FormalParameters*) { *AsyncGeneratorBody* }

1. Return **true**.

14.5.7 Static Semantics: IsConstantDeclaration

AsyncGeneratorDeclaration : `async function` * *BindingIdentifier* (*FormalParameters*) { *AsyncGeneratorBody* }
AsyncGeneratorDeclaration : `async function` * (*FormalParameters*) { *AsyncGeneratorBody* }

1. Return **false**.

14.5.8 Static Semantics: IsFunctionDefinition

AsyncGeneratorExpression : `async function` * *BindingIdentifier*$_{opt}$ (*FormalParameters*) { *AsyncGeneratorBody* }

1. Return **true**.

14.5.9 Static Semantics: PropName

AsyncGeneratorMethod : `async` * *PropertyName* (*UniqueFormalParameters*) { *AsyncGeneratorBody* }

1. Return PropName of *PropertyName*.

14.5.10 Runtime Semantics: EvaluateBody

With parameters *functionObject* and List *argumentsList*.

AsyncGeneratorBody : *FunctionBody*

1. Perform ? FunctionDeclarationInstantiation(*functionObject*, *argumentsList*).
2. Let *generator* be ? OrdinaryCreateFromConstructor(*functionObject*, "%**AsyncGenerator.prototype**%", « [[AsyncGeneratorState]], [[AsyncGeneratorContext]], [[AsyncGeneratorQueue]] »).
3. Perform ! AsyncGeneratorStart(*generator*, *FunctionBody*).
4. Return Completion { [[Type]]: return, [[Value]]: *generator*, [[Target]]: empty }.

14.5.11 Runtime Semantics: InstantiateFunctionObject

With parameter *scope*.

AsyncGeneratorDeclaration `: async function *` *BindingIdentifier* `(` *FormalParameters* `) {` *AsyncGeneratorBody* `}`

1. Let *name* be StringValue of *BindingIdentifier*.
2. Let *F* be ! OrdinaryFunctionCreate(%AsyncGenerator%, *FormalParameters*, *AsyncGeneratorBody*, non-lexical-this, *scope*).
3. Let *prototype* be ! OrdinaryObjectCreate(%AsyncGenerator.prototype%).
4. Perform ! DefinePropertyOrThrow(*F*, **"prototype"**, PropertyDescriptor { [[Value]]: *prototype*, [[Writable]]: **true**, [[Enumerable]]: **false**, [[Configurable]]: **false** }).
5. Perform ! SetFunctionName(*F*, *name*).
6. Set *F*.[[SourceText]] to the source text matched by *AsyncGeneratorDeclaration*.
7. Return *F*.

AsyncGeneratorDeclaration `: async function *(` *FormalParameters* `) {` *AsyncGeneratorBody* `}`

1. Let *F* be OrdinaryFunctionCreate(%AsyncGenerator%, *FormalParameters*, *AsyncGeneratorBody*, non-lexical-this, *scope*).
2. Let *prototype* be OrdinaryObjectCreate(%AsyncGenerator.prototype%).
3. Perform DefinePropertyOrThrow(*F*, **"prototype"**, PropertyDescriptor { [[Value]]: *prototype*, [[Writable]]: **true**, [[Enumerable]]: **false**, [[Configurable]]: **false** }).
4. Perform SetFunctionName(*F*, **"default"**).
5. Set *F*.[[SourceText]] to the source text matched by *AsyncGeneratorDeclaration*.
6. Return *F*.

NOTE An anonymous *AsyncGeneratorDeclaration* can only occur as part of an **`export default`** declaration.

14.5.12 Runtime Semantics: PropertyDefinitionEvaluation

With parameter *object* and *enumerable*.

AsyncGeneratorMethod `: async *` *PropertyName* `(` *UniqueFormalParameters* `) {` *AsyncGeneratorBody* `}`

1. Let *propKey* be the result of evaluating *PropertyName*.
2. ReturnIfAbrupt(*propKey*).
3. Let *scope* be the running execution context's LexicalEnvironment.
4. Let *closure* be ! OrdinaryFunctionCreate(%AsyncGenerator%, *UniqueFormalParameters*, *AsyncGeneratorBody*, non-lexical-this, *scope*).
5. Perform ! MakeMethod(*closure*, *object*).
6. Let *prototype* be ! OrdinaryObjectCreate(%AsyncGenerator.prototype%).
7. Perform ! DefinePropertyOrThrow(*closure*, **"prototype"**, PropertyDescriptor { [[Value]]: *prototype*, [[Writable]]: **true**, [[Enumerable]]: **false**, [[Configurable]]: **false** }).
8. Perform ! SetFunctionName(*closure*, *propKey*).
9. Set *closure*.[[SourceText]] to the source text matched by *AsyncGeneratorMethod*.
10. Let *desc* be PropertyDescriptor { [[Value]]: *closure*, [[Writable]]: **true**, [[Enumerable]]: *enumerable*, [[Configurable]]: **true** }.

11. Return ? DefinePropertyOrThrow(*object*, *propKey*, *desc*).

14.5.13 Runtime Semantics: NamedEvaluation

With parameter *name*.

AsyncGeneratorExpression : `async function *` (*FormalParameters*) { *AsyncGeneratorBody* }

1. Let *closure* be the result of evaluating this *AsyncGeneratorExpression*.
2. Perform SetFunctionName(*closure*, *name*).
3. Return *closure*.

14.5.14 Runtime Semantics: Evaluation

AsyncGeneratorExpression : `async function *` (*FormalParameters*) { *AsyncGeneratorBody* }

1. Let *scope* be the LexicalEnvironment of the running execution context.
2. Let *closure* be ! OrdinaryFunctionCreate(%AsyncGenerator%, *FormalParameters*, *AsyncGeneratorBody*, non-lexical-this, *scope*).
3. Let *prototype* be ! OrdinaryObjectCreate(%AsyncGenerator.prototype%).
4. Perform ! DefinePropertyOrThrow(*closure*, **"prototype"**, PropertyDescriptor { [[Value]]: *prototype*, [[Writable]]: **true**, [[Enumerable]]: **false**, [[Configurable]]: **false** }).
5. Set *closure*.[[SourceText]] to the source text matched by *AsyncGeneratorExpression*.
6. Return *closure*.

AsyncGeneratorExpression : `async function *` *BindingIdentifier* (*FormalParameters*) { *AsyncGeneratorBody* }

1. Let *scope* be the running execution context's LexicalEnvironment.
2. Let *funcEnv* be ! NewDeclarativeEnvironment(*scope*).
3. Let *envRec* be *funcEnv*'s EnvironmentRecord.
4. Let *name* be StringValue of *BindingIdentifier*.
5. Perform ! *envRec*.CreateImmutableBinding(*name*, **false**).
6. Let *closure* be ! OrdinaryFunctionCreate(%AsyncGenerator%, *FormalParameters*, *AsyncGeneratorBody*, non-lexical-this, *funcEnv*).
7. Let *prototype* be ! OrdinaryObjectCreate(%AsyncGenerator.prototype%).
8. Perform ! DefinePropertyOrThrow(*closure*, **"prototype"**, PropertyDescriptor { [[Value]]: *prototype*, [[Writable]]: **true**, [[Enumerable]]: **false**, [[Configurable]]: **false** }).
9. Perform ! SetFunctionName(*closure*, *name*).
10. Perform ! *envRec*.InitializeBinding(*name*, *closure*).
11. Set *closure*.[[SourceText]] to the source text matched by *AsyncGeneratorExpression*.
12. Return *closure*.

NOTE The *BindingIdentifier* in an *AsyncGeneratorExpression* can be referenced from inside the *AsyncGeneratorExpression*'s *AsyncGeneratorBody* to allow the generator code to call itself recursively. However, unlike in an *AsyncGeneratorDeclaration*, the *BindingIdentifier* in an *AsyncGeneratorExpression* cannot be referenced from and does not affect the scope enclosing the *AsyncGeneratorExpression*.

14.6 Class Definitions

Syntax

ClassDeclaration[Yield, Await, Default] :
  class *BindingIdentifier*[?Yield, ?Await] *ClassTail*[?Yield, ?Await]
  [+Default] **class** *ClassTail*[?Yield, ?Await]

ClassExpression[Yield, Await] :
  class *BindingIdentifier*[?Yield, ?Await] opt *ClassTail*[?Yield, ?Await]

ClassTail[Yield, Await] :
  ClassHeritage[?Yield, ?Await] opt **{** *ClassBody*[?Yield, ?Await] opt **}**

ClassHeritage[Yield, Await] :
  extends *LeftHandSideExpression*[?Yield, ?Await]

ClassBody[Yield, Await] :
  ClassElementList[?Yield, ?Await]

ClassElementList[Yield, Await] :
  ClassElement[?Yield, ?Await]
  ClassElementList[?Yield, ?Await] *ClassElement*[?Yield, ?Await]

ClassElement[Yield, Await] :
  MethodDefinition[?Yield, ?Await]
  static *MethodDefinition*[?Yield, ?Await]
  ;

NOTE A class definition is always strict mode code.

14.6.1 Static Semantics: Early Errors

ClassTail **:** *ClassHeritage*opt **{** *ClassBody* **}**

- It is a Syntax Error if *ClassHeritage* is not present and the following algorithm evaluates to **true**:
  1. Let *constructor* be ConstructorMethod of *ClassBody*.
  2. If *constructor* is empty, return **false**.
  3. Return HasDirectSuper of *constructor*.

ClassBody **:** *ClassElementList*

- It is a Syntax Error if PrototypePropertyNameList of *ClassElementList* contains more than one occurrence of **"constructor"**.

ClassElement **:** *MethodDefinition*

- It is a Syntax Error if PropName of *MethodDefinition* is not **"constructor"** and HasDirectSuper of *MethodDefinition* is **true**.

- It is a Syntax Error if PropName of *MethodDefinition* is **"constructor"** and SpecialMethod of *MethodDefinition* is **true**.

ClassElement : `static` *MethodDefinition*

- It is a Syntax Error if HasDirectSuper of *MethodDefinition* is **true**.
- It is a Syntax Error if PropName of *MethodDefinition* is **"prototype"**.

14.6.2 Static Semantics: BoundNames

ClassDeclaration : `class` *BindingIdentifier* *ClassTail*

1. Return the BoundNames of *BindingIdentifier*.

ClassDeclaration : `class` *ClassTail*

1. Return « **"*default*"** ».

14.6.3 Static Semantics: ConstructorMethod

ClassElementList : *ClassElement*

1. If *ClassElement* is *ClassElement* : ; , return empty.
2. If IsStatic of *ClassElement* is **true**, return empty.
3. If PropName of *ClassElement* is not **"constructor"**, return empty.
4. Return *ClassElement*.

ClassElementList : *ClassElementList* *ClassElement*

1. Let *head* be ConstructorMethod of *ClassElementList*.
2. If *head* is not empty, return *head*.
3. If *ClassElement* is *ClassElement* : ; , return empty.
4. If IsStatic of *ClassElement* is **true**, return empty.
5. If PropName of *ClassElement* is not **"constructor"**, return empty.
6. Return *ClassElement*.

NOTE Early Error rules ensure that there is only one method definition named **"constructor"** and that it is not an accessor property or generator definition.

14.6.4 Static Semantics: Contains

With parameter *symbol*.

ClassTail : *ClassHeritage*$_{opt}$ { *ClassBody* }

1. If *symbol* is *ClassBody*, return **true**.
2. If *symbol* is *ClassHeritage*, then
   a. If *ClassHeritage* is present, return **true**; otherwise return **false**.
3. Let *inHeritage* be *ClassHeritage* Contains *symbol*.
4. If *inHeritage* is **true**, return **true**.
5. Return the result of ComputedPropertyContains for *ClassBody* with argument *symbol*.

NOTE Static semantic rules that depend upon substructure generally do not look into class bodies except for *PropertyName*s.

14.6.5 Static Semantics: ComputedPropertyContains

With parameter *symbol*.

ClassElementList : *ClassElementList* *ClassElement*

1. Let *inList* be ComputedPropertyContains of *ClassElementList* with argument *symbol*.
2. If *inList* is **true**, return **true**.
3. Return the result of ComputedPropertyContains for *ClassElement* with argument *symbol*.

ClassElement : `;`

1. Return **false**.

14.6.6 Static Semantics: HasName

ClassExpression : `class` *ClassTail*

1. Return **false**.

ClassExpression : `class` *BindingIdentifier* *ClassTail*

1. Return **true**.

14.6.7 Static Semantics: IsConstantDeclaration

ClassDeclaration : `class` *BindingIdentifier* *ClassTail*
ClassDeclaration : `class` *ClassTail*

1. Return **false**.

14.6.8 Static Semantics: IsFunctionDefinition

ClassExpression : `class` *BindingIdentifier*$_{opt}$ *ClassTail*

1. Return **true**.

14.6.9 Static Semantics: IsStatic

ClassElement : *MethodDefinition*

1. Return **false**.

ClassElement : `static` *MethodDefinition*

1. Return **true**.

ClassElement : `;`

1. Return **false**.

14.6.10 Static Semantics: NonConstructorMethodDefinitions

ClassElementList : *ClassElement*

1. If *ClassElement* is *ClassElement* : ; , return a new empty List.
2. If IsStatic of *ClassElement* is **false** and PropName of *ClassElement* is **"constructor"**, return a new empty List.
3. Return a List containing *ClassElement*.

ClassElementList : *ClassElementList* *ClassElement*

1. Let *list* be NonConstructorMethodDefinitions of *ClassElementList*.
2. If *ClassElement* is *ClassElement* : ; , return *list*.
3. If IsStatic of *ClassElement* is **false** and PropName of *ClassElement* is **"constructor"**, return *list*.
4. Append *ClassElement* to the end of *list*.
5. Return *list*.

14.6.11 Static Semantics: PrototypePropertyNameList

ClassElementList : *ClassElement*

1. If PropName of *ClassElement* is empty, return a new empty List.
2. If IsStatic of *ClassElement* is **true**, return a new empty List.
3. Return a List containing PropName of *ClassElement*.

ClassElementList : *ClassElementList* *ClassElement*

1. Let *list* be PrototypePropertyNameList of *ClassElementList*.
2. If PropName of *ClassElement* is empty, return *list*.
3. If IsStatic of *ClassElement* is **true**, return *list*.
4. Append PropName of *ClassElement* to the end of *list*.
5. Return *list*.

14.6.12 Static Semantics: PropName

ClassElement : ;

1. Return empty.

14.6.13 Runtime Semantics: ClassDefinitionEvaluation

With parameters *classBinding* and *className*.

ClassTail : *ClassHeritage*$_{opt}$ { *ClassBody*$_{opt}$ }

1. Let *lex* be the LexicalEnvironment of the running execution context.
2. Let *classScope* be NewDeclarativeEnvironment(*lex*).
3. Let *classScopeEnvRec* be *classScope*'s EnvironmentRecord.
4. If *classBinding* is not **undefined**, then
   a. Perform *classScopeEnvRec*.CreateImmutableBinding(*classBinding*, **true**).
5. If *ClassHeritage*$_{opt}$ is not present, then
   a. Let *protoParent* be %Object.prototype%.
   b. Let *constructorParent* be %Function.prototype%.

6. Else,
    a. Set the running execution context's LexicalEnvironment to *classScope*.
    b. Let *superclassRef* be the result of evaluating *ClassHeritage*.
    c. Set the running execution context's LexicalEnvironment to *lex*.
    d. Let *superclass* be ? GetValue(*superclassRef*).
    e. If *superclass* is **null**, then
        i. Let *protoParent* be **null**.
        ii. Let *constructorParent* be %Function.prototype%.
    f. Else if IsConstructor(*superclass*) is **false**, throw a **TypeError** exception.
    g. Else,
        i. Let *protoParent* be ? Get(*superclass*, **"prototype"**).
        ii. If Type(*protoParent*) is neither Object nor Null, throw a **TypeError** exception.
        iii. Let *constructorParent* be *superclass*.
7. Let *proto* be OrdinaryObjectCreate(*protoParent*).
8. If $ClassBody_{opt}$ is not present, let *constructor* be empty.
9. Else, let *constructor* be ConstructorMethod of *ClassBody*.
10. If *constructor* is empty, then
    a. If $ClassHeritage_{opt}$ is present, then
        i. Set *constructor* to the result of parsing the source text

        ```
        constructor(...args) { super(...args); }
        ```

        using the syntactic grammar with the goal symbol $MethodDefinition_{[\sim Yield,\ \sim Await]}$.
    b. Else,
        i. Set *constructor* to the result of parsing the source text

        ```
        constructor() {}
        ```

        using the syntactic grammar with the goal symbol $MethodDefinition_{[\sim Yield,\ \sim Await]}$.
11. Set the running execution context's LexicalEnvironment to *classScope*.
12. Let *constructorInfo* be ! DefineMethod of *constructor* with arguments *proto* and *constructorParent*.
13. Let *F* be *constructorInfo*.[[Closure]].
14. Perform MakeConstructor(*F*, **false**, *proto*).
15. If $ClassHeritage_{opt}$ is present, set *F*.[[ConstructorKind]] to derived.
16. Perform MakeClassConstructor(*F*).
17. If *className* is not **undefined**, then
    a. Perform SetFunctionName(*F*, *className*).
18. Perform CreateMethodProperty(*proto*, **"constructor"**, *F*).
19. If $ClassBody_{opt}$ is not present, let *methods* be a new empty List.
20. Else, let *methods* be NonConstructorMethodDefinitions of *ClassBody*.
21. For each *ClassElement m* in order from *methods*, do
    a. If IsStatic of *m* is **false**, then
        i. Let *status* be PropertyDefinitionEvaluation of *m* with arguments *proto* and **false**.
    b. Else,
        i. Let *status* be PropertyDefinitionEvaluation of *m* with arguments *F* and **false**.
    c. If *status* is an abrupt completion, then
        i. Set the running execution context's LexicalEnvironment to *lex*.
        ii. Return Completion(*status*).
22. Set the running execution context's LexicalEnvironment to *lex*.

23. If *classBinding* is not **undefined**, then
    a. Perform *classScopeEnvRec*.InitializeBinding(*classBinding*, *F*).
24. Return *F*.

14.6.14 Runtime Semantics: BindingClassDeclarationEvaluation

ClassDeclaration `:` `class` *BindingIdentifier* *ClassTail*

1. Let *className* be StringValue of *BindingIdentifier*.
2. Let *value* be ? ClassDefinitionEvaluation of *ClassTail* with arguments *className* and *className*.
3. Set *value*.[[SourceText]] to the source text matched by *ClassDeclaration*.
4. Let *env* be the running execution context's LexicalEnvironment.
5. Perform ? InitializeBoundName(*className*, *value*, *env*).
6. Return *value*.

ClassDeclaration `:` `class` *ClassTail*

1. Let *value* be ? ClassDefinitionEvaluation of *ClassTail* with arguments **undefined** and **"default"**.
2. Set *value*.[[SourceText]] to the source text matched by *ClassDeclaration*.
3. Return *value*.

NOTE *ClassDeclaration* `:` `class` *ClassTail* only occurs as part of an *ExportDeclaration* and establishing its binding is handled as part of the evaluation action for that production. See 15.2.3.11.

14.6.15 Runtime Semantics: NamedEvaluation

With parameter *name*.

ClassExpression `:` `class` *ClassTail*

1. Let *value* be the result of ClassDefinitionEvaluation of *ClassTail* with arguments **undefined** and *name*.
2. ReturnIfAbrupt(*value*).
3. Set *value*.[[SourceText]] to the source text matched by *ClassExpression*.
4. Return *value*.

14.6.16 Runtime Semantics: Evaluation

ClassDeclaration `:` `class` *BindingIdentifier* *ClassTail*

1. Perform ? BindingClassDeclarationEvaluation of this *ClassDeclaration*.
2. Return NormalCompletion(empty).

NOTE *ClassDeclaration* `:` `class` *ClassTail* only occurs as part of an *ExportDeclaration* and is never directly evaluated.

ClassExpression `:` `class` $BindingIdentifier_{opt}$ *ClassTail*

1. If $BindingIdentifier_{opt}$ is not present, let *className* be **undefined**.
2. Else, let *className* be StringValue of *BindingIdentifier*.

3. Let *value* be ? ClassDefinitionEvaluation of *ClassTail* with arguments *className* and *className*.
4. Set *value*.[[SourceText]] to the source text matched by *ClassExpression*.
5. Return *value*.

14.7 Async Function Definitions

Syntax

AsyncFunctionDeclaration[Yield, Await, Default] :
  async [no *LineTerminator* here] **function** *BindingIdentifier*[?Yield, ?Await] (*FormalParameters*[~Yield, +Await]) { *AsyncFunctionBody* }
  [+Default] **async** [no *LineTerminator* here] **function** (*FormalParameters*[~Yield, +Await]) { *AsyncFunctionBody* }

AsyncFunctionExpression :
  async [no *LineTerminator* here] **function** (*FormalParameters*[~Yield, +Await]) { *AsyncFunctionBody* }
  async [no *LineTerminator* here] **function** *BindingIdentifier*[~Yield, +Await] (*FormalParameters*[~Yield, +Await]) { *AsyncFunctionBody* }

AsyncMethod[Yield, Await] :
  async [no *LineTerminator* here] *PropertyName*[?Yield, ?Await] (*UniqueFormalParameters*[~Yield, +Await]) { *AsyncFunctionBody* }

AsyncFunctionBody :
  FunctionBody[~Yield, +Await]

AwaitExpression[Yield] :
  await *UnaryExpression*[?Yield, +Await]

NOTE 1 **`await`** is parsed as an *AwaitExpression* when the [Await] parameter is present. The [Await] parameter is present in the following contexts:

- In an *AsyncFunctionBody*.
- In the *FormalParameters* of an *AsyncFunctionDeclaration*, *AsyncFunctionExpression*, *AsyncGeneratorDeclaration*, or *AsyncGeneratorExpression*. *AwaitExpression* in this position is a Syntax error via static semantics.

When *Module* is the syntactic goal symbol and the [Await] parameter is absent, **`await`** is parsed as a keyword and will be a Syntax error. When *Script* is the syntactic goal symbol, **`await`** may be parsed as an identifier when the [Await] parameter is absent. This includes the following contexts:

- Anywhere outside of an *AsyncFunctionBody* or *FormalParameters* of an *AsyncFunctionDeclaration*, *AsyncFunctionExpression*, *AsyncGeneratorDeclaration*, or *AsyncGeneratorExpression*.
- In the *BindingIdentifier* of a *FunctionExpression*, *GeneratorExpression*, or *AsyncGeneratorExpression*.

NOTE 2 Unlike *YieldExpression*, it is a Syntax Error to omit the operand of an *AwaitExpression*. You must await something.

14.7.1 Static Semantics: Early Errors

AsyncMethod : `async` *PropertyName* `(` *UniqueFormalParameters* `)` `{` *AsyncFunctionBody* `}`

- It is a Syntax Error if ContainsUseStrict of *AsyncFunctionBody* is **true** and IsSimpleParameterList of *UniqueFormalParameters* is **false**.
- It is a Syntax Error if HasDirectSuper of *AsyncMethod* is **true**.
- It is a Syntax Error if *UniqueFormalParameters* Contains *AwaitExpression* is **true**.
- It is a Syntax Error if any element of the BoundNames of *UniqueFormalParameters* also occurs in the LexicallyDeclaredNames of *AsyncFunctionBody*.

AsyncFunctionDeclaration : `async function` *BindingIdentifier* `(` *FormalParameters* `)` `{` *AsyncFunctionBody* `}`
AsyncFunctionDeclaration : `async function` `(` *FormalParameters* `)` `{` *AsyncFunctionBody* `}`
AsyncFunctionExpression : `async function` `(` *FormalParameters* `)` `{` *AsyncFunctionBody* `}`
AsyncFunctionExpression : `async function` *BindingIdentifier* `(` *FormalParameters* `)` `{` *AsyncFunctionBody* `}`

- It is a Syntax Error if ContainsUseStrict of *AsyncFunctionBody* is **true** and IsSimpleParameterList of *FormalParameters* is **false**.
- It is a Syntax Error if *FormalParameters* Contains *AwaitExpression* is **true**.
- If the source code matching *FormalParameters* is strict mode code, the Early Error rules for *UniqueFormalParameters* : *FormalParameters* are applied.
- If *BindingIdentifier* is present and the source code matching *BindingIdentifier* is strict mode code, it is a Syntax Error if the StringValue of *BindingIdentifier* is **"eval"** or **"arguments"**.
- It is a Syntax Error if any element of the BoundNames of *FormalParameters* also occurs in the LexicallyDeclaredNames of *AsyncFunctionBody*.
- It is a Syntax Error if *FormalParameters* Contains *SuperProperty* is **true**.
- It is a Syntax Error if *AsyncFunctionBody* Contains *SuperProperty* is **true**.
- It is a Syntax Error if *FormalParameters* Contains *SuperCall* is **true**.
- It is a Syntax Error if *AsyncFunctionBody* Contains *SuperCall* is **true**.

14.7.2 Static Semantics: BoundNames

AsyncFunctionDeclaration : `async function` *BindingIdentifier* `(` *FormalParameters* `)` `{` *AsyncFunctionBody* `}`

1. Return the BoundNames of *BindingIdentifier*.

AsyncFunctionDeclaration : `async function` `(` *FormalParameters* `)` `{` *AsyncFunctionBody* `}`

1. Return « **"*default*"** ».

NOTE **"*default*"** is used within this specification as a synthetic name for hoistable anonymous functions that are defined using export declarations.

14.7.3 Static Semantics: ComputedPropertyContains

With parameter *symbol*.

AsyncMethod : **async** *PropertyName* (*UniqueFormalParameters*) { *AsyncFunctionBody* }

1. Return the result of ComputedPropertyContains for *PropertyName* with argument *symbol*.

14.7.4 Static Semantics: Contains

With parameter *symbol*.

AsyncFunctionDeclaration : **async function** *BindingIdentifier* (*FormalParameters*) { *AsyncFunctionBody* }
AsyncFunctionDeclaration : **async function** (*FormalParameters*) { *AsyncFunctionBody* }
AsyncFunctionExpression : **async function** (*FormalParameters*) { *AsyncFunctionBody* }
AsyncFunctionExpression : **async function** *BindingIdentifier* (*FormalParameters*) { *AsyncFunctionBody* }

1. Return **false**.

14.7.5 Static Semantics: HasDirectSuper

AsyncMethod : **async** *PropertyName* (*UniqueFormalParameters*) { *AsyncFunctionBody* }

1. If *UniqueFormalParameters* Contains *SuperCall* is **true**, return **true**.
2. Return *AsyncFunctionBody* Contains *SuperCall*.

14.7.6 Static Semantics: HasName

AsyncFunctionExpression : **async function** (*FormalParameters*) { *AsyncFunctionBody* }

1. Return **false**.

AsyncFunctionExpression : **async function** *BindingIdentifier* (*FormalParameters*) { *AsyncFunctionBody* }

1. Return **true**.

14.7.7 Static Semantics: IsConstantDeclaration

AsyncFunctionDeclaration : **async function** *BindingIdentifier* (*FormalParameters*) { *AsyncFunctionBody* }
AsyncFunctionDeclaration : **async function** (*FormalParameters*) { *AsyncFunctionBody* }

1. Return **false**.

14.7.8 Static Semantics: IsFunctionDefinition

AsyncFunctionExpression : **async function** (*FormalParameters*) { *AsyncFunctionBody* }
AsyncFunctionExpression : **async function** *BindingIdentifier* (*FormalParameters*) { *AsyncFunctionBody* }

1. Return **true**.

14.7.9 Static Semantics: PropName

AsyncMethod : **async** *PropertyName* (*UniqueFormalParameters*) { *AsyncFunctionBody* }

1. Return PropName of *PropertyName*.

14.7.10 Runtime Semantics: InstantiateFunctionObject

With parameter *scope*.

AsyncFunctionDeclaration : **`async function`** *BindingIdentifier* **`(`** *FormalParameters* **`)`** **`{`** *AsyncFunctionBody* **`}`**

1. Let *name* be StringValue of *BindingIdentifier*.
2. Let *F* be ! OrdinaryFunctionCreate(%AsyncFunction.prototype%, *FormalParameters*, *AsyncFunctionBody*, non-lexical-this, *scope*).
3. Perform ! SetFunctionName(*F*, *name*).
4. Set *F*.[[SourceText]] to the source text matched by *AsyncFunctionDeclaration*.
5. Return *F*.

AsyncFunctionDeclaration : **`async function (`** *FormalParameters* **`) {`** *AsyncFunctionBody* **`}`**

1. Let *F* be ! OrdinaryFunctionCreate(%AsyncFunction.prototype%, *FormalParameters*, *AsyncFunctionBody*, non-lexical-this, *scope*).
2. Perform ! SetFunctionName(*F*, **"default"**).
3. Set *F*.[[SourceText]] to the source text matched by *AsyncFunctionDeclaration*.
4. Return *F*.

14.7.11 Runtime Semantics: EvaluateBody

With parameters *functionObject* and List *argumentsList*.

AsyncFunctionBody : *FunctionBody*

1. Let *promiseCapability* be ! NewPromiseCapability(%Promise%).
2. Let *declResult* be FunctionDeclarationInstantiation(*functionObject*, *argumentsList*).
3. If *declResult* is not an abrupt completion, then
   a. Perform ! AsyncFunctionStart(*promiseCapability*, *FunctionBody*).
4. Else,
   a. Perform ! Call(*promiseCapability*.[[Reject]], **undefined**, « *declResult*.[[Value]] »).
5. Return Completion { [[Type]]: return, [[Value]]: *promiseCapability*.[[Promise]], [[Target]]: empty }.

14.7.12 Runtime Semantics: PropertyDefinitionEvaluation

With parameters *object* and *enumerable*.

AsyncMethod : **`async`** *PropertyName* **`(`** *UniqueFormalParameters* **`) {`** *AsyncFunctionBody* **`}`**

1. Let *propKey* be the result of evaluating *PropertyName*.
2. ReturnIfAbrupt(*propKey*).
3. Let *scope* be the LexicalEnvironment of the running execution context.
4. Let *closure* be ! OrdinaryFunctionCreate(%AsyncFunction.prototype%, *UniqueFormalParameters*, *AsyncFunctionBody*, non-lexical-this, *scope*).
5. Perform ! MakeMethod(*closure*, *object*).
6. Perform ! SetFunctionName(*closure*, *propKey*).
7. Set *closure*.[[SourceText]] to the source text matched by *AsyncMethod*.
8. Let *desc* be the PropertyDescriptor { [[Value]]: *closure*, [[Writable]]: **true**, [[Enumerable]]: *enumerable*, [[Configurable]]: **true** }.
9. Return ? DefinePropertyOrThrow(*object*, *propKey*, *desc*).

14.7.13 Runtime Semantics: NamedEvaluation

With parameter *name*.

AsyncFunctionExpression : `async function` (*FormalParameters*) { *AsyncFunctionBody* }

1. Let *closure* be the result of evaluating this *AsyncFunctionExpression*.
2. Perform SetFunctionName(*closure*, *name*).
3. Return *closure*.

14.7.14 Runtime Semantics: Evaluation

AsyncFunctionDeclaration : `async function` *BindingIdentifier* (*FormalParameters*) { *AsyncFunctionBody* }

1. Return NormalCompletion(empty).

AsyncFunctionDeclaration : `async function` (*FormalParameters*) { *AsyncFunctionBody* }

1. Return NormalCompletion(empty).

AsyncFunctionExpression : `async function` (*FormalParameters*) { *AsyncFunctionBody* }

1. Let *scope* be the LexicalEnvironment of the running execution context.
2. Let *closure* be ! OrdinaryFunctionCreate(%AsyncFunction.prototype%, *FormalParameters*, *AsyncFunctionBody*, non-lexical-this, *scope*).
3. Set *closure*.[[SourceText]] to the source text matched by *AsyncFunctionExpression*.
4. Return *closure*.

AsyncFunctionExpression : `async function` *BindingIdentifier* (*FormalParameters*) { *AsyncFunctionBody* }

1. Let *scope* be the LexicalEnvironment of the running execution context.
2. Let *funcEnv* be ! NewDeclarativeEnvironment(*scope*).
3. Let *envRec* be *funcEnv*'s EnvironmentRecord.
4. Let *name* be StringValue of *BindingIdentifier*.
5. Perform ! *envRec*.CreateImmutableBinding(*name*, **false**).
6. Let *closure* be ! OrdinaryFunctionCreate(%AsyncFunction.prototype%, *FormalParameters*, *AsyncFunctionBody*, non-lexical-this, *funcEnv*).
7. Perform ! SetFunctionName(*closure*, *name*).
8. Perform ! *envRec*.InitializeBinding(*name*, *closure*).
9. Set *closure*.[[SourceText]] to the source text matched by *AsyncFunctionExpression*.
10. Return *closure*.

AwaitExpression : `await` *UnaryExpression*

1. Let *exprRef* be the result of evaluating *UnaryExpression*.
2. Let *value* be ? GetValue(*exprRef*).
3. Return ? Await(*value*).

14.8 Async Arrow Function Definitions

Syntax

AsyncArrowFunction[In, Yield, Await] :

async [no *LineTerminator* here] *AsyncArrowBindingIdentifier*[?Yield] [no *LineTerminator* here] **=>** *AsyncConciseBody*[?In]

CoverCallExpressionAndAsyncArrowHead[?Yield, ?Await] [no *LineTerminator* here] **=>** *AsyncConciseBody*[?In]

AsyncConciseBody[In] :

[lookahead ≠ **{**] *ExpressionBody*[?In, +Await]

{ *AsyncFunctionBody* **}**

AsyncArrowBindingIdentifier[Yield] :

BindingIdentifier[?Yield, +Await]

CoverCallExpressionAndAsyncArrowHead[Yield, Await] :

MemberExpression[?Yield, ?Await] *Arguments*[?Yield, ?Await]

Supplemental Syntax

When processing an instance of the production *AsyncArrowFunction* **:** *CoverCallExpressionAndAsyncArrowHead* **=>** *AsyncConciseBody* the interpretation of *CoverCallExpressionAndAsyncArrowHead* is refined using the following grammar:

AsyncArrowHead **:**

async [no *LineTerminator* here] *ArrowFormalParameters*[~Yield, +Await]

14.8.1 Static Semantics: Early Errors

AsyncArrowFunction **:** **async** *AsyncArrowBindingIdentifier* **=>** *AsyncConciseBody*

- It is a Syntax Error if any element of the BoundNames of *AsyncArrowBindingIdentifier* also occurs in the LexicallyDeclaredNames of *AsyncConciseBody*.

AsyncArrowFunction **:** *CoverCallExpressionAndAsyncArrowHead* **=>** *AsyncConciseBody*

- It is a Syntax Error if *CoverCallExpressionAndAsyncArrowHead* Contains *YieldExpression* is **true**.
- It is a Syntax Error if *CoverCallExpressionAndAsyncArrowHead* Contains *AwaitExpression* is **true**.
- It is a Syntax Error if *CoverCallExpressionAndAsyncArrowHead* is not covering an *AsyncArrowHead*.
- It is a Syntax Error if any element of the BoundNames of *CoverCallExpressionAndAsyncArrowHead* also occurs in the LexicallyDeclaredNames of *AsyncConciseBody*.
- It is a Syntax Error if ContainsUseStrict of *AsyncConciseBody* is **true** and IsSimpleParameterList of *CoverCallExpressionAndAsyncArrowHead* is **false**.
- All Early Error rules for *AsyncArrowHead* and its derived productions apply to CoveredAsyncArrowHead of *CoverCallExpressionAndAsyncArrowHead*.

14.8.2 Static Semantics: CoveredAsyncArrowHead

CoverCallExpressionAndAsyncArrowHead **:** *MemberExpression* *Arguments*

1. Return the *AsyncArrowHead* that is covered by *CoverCallExpressionAndAsyncArrowHead*.

14.8.3 Static Semantics: BoundNames

CoverCallExpressionAndAsyncArrowHead : *MemberExpression* *Arguments*

1. Let *head* be CoveredAsyncArrowHead of *CoverCallExpressionAndAsyncArrowHead*.
2. Return the BoundNames of *head*.

14.8.4 Static Semantics: Contains

With parameter *symbol*.

AsyncArrowFunction : `async` *AsyncArrowBindingIdentifier* `=>` *AsyncConciseBody*

1. If *symbol* is not one of *NewTarget*, *SuperProperty*, *SuperCall*, `super`, or `this`, return **false**.
2. Return *AsyncConciseBody* Contains *symbol*.

AsyncArrowFunction : *CoverCallExpressionAndAsyncArrowHead* `=>` *AsyncConciseBody*

1. If *symbol* is not one of *NewTarget*, *SuperProperty*, *SuperCall*, `super`, or `this`, return **false**.
2. Let *head* be CoveredAsyncArrowHead of *CoverCallExpressionAndAsyncArrowHead*.
3. If *head* Contains *symbol* is **true**, return **true**.
4. Return *AsyncConciseBody* Contains *symbol*.

NOTE Normally, Contains does not look inside most function forms. However, Contains is used to detect `new.target`, `this`, and `super` usage within an AsyncArrowFunction.

14.8.5 Static Semantics: ContainsExpression

AsyncArrowBindingIdentifier : *BindingIdentifier*

1. Return **false**.

14.8.6 Static Semantics: ContainsUseStrict

AsyncConciseBody : *ExpressionBody*

1. Return **false**.

14.8.7 Static Semantics: ExpectedArgumentCount

AsyncArrowBindingIdentifier : *BindingIdentifier*

1. Return 1.

14.8.8 Static Semantics: HasName

AsyncArrowFunction : `async` *AsyncArrowBindingIdentifier* `=>` *AsyncConciseBody*
AsyncArrowFunction : *CoverCallExpressionAndAsyncArrowHead* `=>` *AsyncConciseBody*

1. Return **false**.

14.8.9 Static Semantics: IsSimpleParameterList

AsyncArrowBindingIdentifier[Yield] : *BindingIdentifier*[?Yield, +Await]

1. Return **true**.

CoverCallExpressionAndAsyncArrowHead : *MemberExpression* *Arguments*

1. Let *head* be CoveredAsyncArrowHead of *CoverCallExpressionAndAsyncArrowHead*.
2. Return IsSimpleParameterList of *head*.

14.8.10 Static Semantics: LexicallyDeclaredNames

AsyncConciseBody : *ExpressionBody*

1. Return a new empty List.

14.8.11 Static Semantics: LexicallyScopedDeclarations

AsyncConciseBody : *ExpressionBody*

1. Return a new empty List.

14.8.12 Static Semantics: VarDeclaredNames

AsyncConciseBody : *ExpressionBody*

1. Return a new empty List.

14.8.13 Static Semantics: VarScopedDeclarations

AsyncConciseBody : *ExpressionBody*

1. Return a new empty List.

14.8.14 Runtime Semantics: IteratorBindingInitialization

With parameters *iteratorRecord* and *environment*.

AsyncArrowBindingIdentifier : *BindingIdentifier*

1. Assert: *iteratorRecord*.[[Done]] is **false**.
2. Let *next* be IteratorStep(*iteratorRecord*).
3. If *next* is an abrupt completion, set *iteratorRecord*.[[Done]] to **true**.
4. ReturnIfAbrupt(*next*).
5. If *next* is **false**, set *iteratorRecord*.[[Done]] to **true**.
6. Else,
   a. Let *v* be IteratorValue(*next*).
   b. If *v* is an abrupt completion, set *iteratorRecord*.[[Done]] to **true**.
   c. ReturnIfAbrupt(*v*).
7. If *iteratorRecord*.[[Done]] is **true**, let *v* be **undefined**.
8. Return the result of performing BindingInitialization for *BindingIdentifier* using *v* and *environment* as the arguments.

14.8.15 Runtime Semantics: EvaluateBody

With parameters *functionObject* and List *argumentsList*.

AsyncConciseBody : *ExpressionBody*

1. Let *promiseCapability* be ! NewPromiseCapability(%Promise%).
2. Let *declResult* be FunctionDeclarationInstantiation(*functionObject*, *argumentsList*).
3. If *declResult* is not an abrupt completion, then
   a. Perform ! AsyncFunctionStart(*promiseCapability*, *ExpressionBody*).
4. Else,
   a. Perform ! Call(*promiseCapability*.[[Reject]], **undefined**, « *declResult*.[[Value]] »).
5. Return Completion { [[Type]]: return, [[Value]]: *promiseCapability*.[[Promise]], [[Target]]: empty }.

14.8.16 Runtime Semantics: NamedEvaluation

With parameter *name*.

AsyncArrowFunction : `async` *AsyncArrowBindingIdentifier* `=>` *AsyncConciseBody*
AsyncArrowFunction : *CoverCallExpressionAndAsyncArrowHead* `=>` *AsyncConciseBody*

1. Let *closure* be the result of evaluating this *AsyncArrowFunction*.
2. Perform SetFunctionName(*closure*, *name*).
3. Return *closure*.

14.8.17 Runtime Semantics: Evaluation

AsyncArrowFunction : `async` *AsyncArrowBindingIdentifier* `=>` *AsyncConciseBody*

1. Let *scope* be the LexicalEnvironment of the running execution context.
2. Let *parameters* be *AsyncArrowBindingIdentifier*.
3. Let *closure* be ! OrdinaryFunctionCreate(%AsyncFunction.prototype%, *parameters*, *AsyncConciseBody*, lexical-this, *scope*).
4. Set *closure*.[[SourceText]] to the source text matched by *AsyncArrowFunction*.
5. Return *closure*.

AsyncArrowFunction : *CoverCallExpressionAndAsyncArrowHead* `=>` *AsyncConciseBody*

1. Let *scope* be the LexicalEnvironment of the running execution context.
2. Let *head* be CoveredAsyncArrowHead of *CoverCallExpressionAndAsyncArrowHead*.
3. Let *parameters* be the *ArrowFormalParameters* of *head*.
4. Let *closure* be ! OrdinaryFunctionCreate(%AsyncFunction.prototype%, *parameters*, *AsyncConciseBody*, lexical-this, *scope*).
5. Set *closure*.[[SourceText]] to the source text matched by *AsyncArrowFunction*.
6. Return *closure*.

14.9 Tail Position Calls

14.9.1 Static Semantics: IsInTailPosition (*call*)

The abstract operation IsInTailPosition with argument *call* performs the following steps:

1. Assert: *call* is a Parse Node.
2. If the source code matching *call* is non-strict code, return **false**.
3. If *call* is not contained within a *FunctionBody*, *ConciseBody*, or *AsyncConciseBody*, return **false**.
4. Let *body* be the *FunctionBody*, *ConciseBody*, or *AsyncConciseBody* that most closely contains *call*.
5. If *body* is the *FunctionBody* of a *GeneratorBody*, return **false**.
6. If *body* is the *FunctionBody* of an *AsyncFunctionBody*, return **false**.
7. If *body* is the *FunctionBody* of an *AsyncGeneratorBody*, return **false**.
8. If *body* is an *AsyncConciseBody*, return **false**.
9. Return the result of HasCallInTailPosition of *body* with argument *call*.

> NOTE Tail Position calls are only defined in strict mode code because of a common non-standard language extension (see 9.2.4) that enables observation of the chain of caller contexts.

14.9.2 Static Semantics: HasCallInTailPosition

With parameter *call*.

> NOTE *call* is a Parse Node that represents a specific range of source text. When the following algorithms compare *call* to another Parse Node, it is a test of whether they represent the same source text.

14.9.2.1 Statement Rules

StatementList : *StatementList* *StatementListItem*

1. Let *has* be HasCallInTailPosition of *StatementList* with argument *call*.
2. If *has* is **true**, return **true**.
3. Return HasCallInTailPosition of *StatementListItem* with argument *call*.

FunctionStatementList : [empty]
StatementListItem : *Declaration*
Statement :
    VariableStatement
    EmptyStatement
    ExpressionStatement
    ContinueStatement
    BreakStatement
    ThrowStatement
    DebuggerStatement
Block : `{ }`
ReturnStatement : `return ;`
LabelledItem : *FunctionDeclaration*
IterationStatement :
    `for` (*LeftHandSideExpression* `of` *AssignmentExpression*) *Statement*
    `for` (`var` *ForBinding* `of` *AssignmentExpression*) *Statement*
    `for` (*ForDeclaration* `of` *AssignmentExpression*) *Statement*
CaseBlock : `{ }`

1. Return **false**.

IfStatement : `if` (*Expression*) *Statement* `else` *Statement*

1. Let *has* be HasCallInTailPosition of the first *Statement* with argument *call*.
2. If *has* is **true**, return **true**.
3. Return HasCallInTailPosition of the second *Statement* with argument *call*.

IfStatement : `if` (*Expression*) *Statement*
IterationStatement :
    `do` *Statement* `while` (*Expression*) ;
    `while` (*Expression*) *Statement*
    `for` ($Expression_{opt}$; $Expression_{opt}$; $Expression_{opt}$) *Statement*
    `for` (`var` *VariableDeclarationList* ; $Expression_{opt}$; $Expression_{opt}$) *Statement*
    `for` (*LexicalDeclaration* $Expression_{opt}$; $Expression_{opt}$) *Statement*
    `for` (*LeftHandSideExpression* `in` *Expression*) *Statement*
    `for` (`var` *ForBinding* `in` *Expression*) *Statement*
    `for` (*ForDeclaration* `in` *Expression*) *Statement*
    `for` `await` (*LeftHandSideExpression* `of` *AssignmentExpression*) *Statement*
    `for` `await` (`var` *ForBinding* `of` *AssignmentExpression*) *Statement*
    `for` `await` (*ForDeclaration* `of` *AssignmentExpression*) *Statement*
WithStatement : `with` (*Expression*) *Statement*

1. Return HasCallInTailPosition of *Statement* with argument *call*.

LabelledStatement :
    LabelIdentifier : *LabelledItem*

1. Return HasCallInTailPosition of *LabelledItem* with argument *call*.

ReturnStatement : `return` *Expression* ;

1. Return HasCallInTailPosition of *Expression* with argument *call*.

SwitchStatement : `switch` (*Expression*) *CaseBlock*

1. Return HasCallInTailPosition of *CaseBlock* with argument *call*.

CaseBlock : { $CaseClauses_{opt}$ *DefaultClause* $CaseClauses_{opt}$ }

1. Let *has* be **false**.
2. If the first *CaseClauses* is present, let *has* be HasCallInTailPosition of the first *CaseClauses* with argument *call*.
3. If *has* is **true**, return **true**.
4. Let *has* be HasCallInTailPosition of *DefaultClause* with argument *call*.
5. If *has* is **true**, return **true**.
6. If the second *CaseClauses* is present, let *has* be HasCallInTailPosition of the second *CaseClauses* with argument *call*.
7. Return *has*.

CaseClauses : *CaseClauses* *CaseClause*

1. Let *has* be HasCallInTailPosition of *CaseClauses* with argument *call*.

2. If *has* is **true**, return **true**.
3. Return HasCallInTailPosition of *CaseClause* with argument *call*.

CaseClause : `case` *Expression* : *StatementList*$_{opt}$
DefaultClause : `default` : *StatementList*$_{opt}$

1. If *StatementList* is present, return HasCallInTailPosition of *StatementList* with argument *call*.
2. Return **false**.

TryStatement : `try` *Block* *Catch*

1. Return HasCallInTailPosition of *Catch* with argument *call*.

TryStatement : `try` *Block* *Finally*
TryStatement : `try` *Block* *Catch* *Finally*

1. Return HasCallInTailPosition of *Finally* with argument *call*.

Catch : `catch` `(` *CatchParameter* `)` *Block*

1. Return HasCallInTailPosition of *Block* with argument *call*.

14.9.2.2 Expression Rules

NOTE A potential tail position call that is immediately followed by return GetValue of the call result is also a possible tail position call. Function calls cannot return reference values, so such a GetValue operation will always return the same value as the actual function call result.

AssignmentExpression :
    YieldExpression
    ArrowFunction
    AsyncArrowFunction
    LeftHandSideExpression `=` *AssignmentExpression*
    LeftHandSideExpression *AssignmentOperator* *AssignmentExpression*
BitwiseANDExpression : *BitwiseANDExpression* `&` *EqualityExpression*
BitwiseXORExpression : *BitwiseXORExpression* `^` *BitwiseANDExpression*
BitwiseORExpression : *BitwiseORExpression* `|` *BitwiseXORExpression*
EqualityExpression :
    EqualityExpression `==` *RelationalExpression*
    EqualityExpression `!=` *RelationalExpression*
    EqualityExpression `===` *RelationalExpression*
    EqualityExpression `!==` *RelationalExpression*
RelationalExpression :
    RelationalExpression `<` *ShiftExpression*
    RelationalExpression `>` *ShiftExpression*
    RelationalExpression `<=` *ShiftExpression*
    RelationalExpression `>=` *ShiftExpression*
    RelationalExpression `instanceof` *ShiftExpression*
    RelationalExpression `in` *ShiftExpression*
ShiftExpression :

ShiftExpression `<<` *AdditiveExpression*
ShiftExpression `>>` *AdditiveExpression*
ShiftExpression `>>>` *AdditiveExpression*

AdditiveExpression `:`
AdditiveExpression `+` *MultiplicativeExpression*
AdditiveExpression `-` *MultiplicativeExpression*

MultiplicativeExpression `:`
MultiplicativeExpression *MultiplicativeOperator* *ExponentiationExpression*

ExponentiationExpression `:`
UpdateExpression `**` *ExponentiationExpression*

UpdateExpression `:`
LeftHandSideExpression `++`
LeftHandSideExpression `--`
`++` *UnaryExpression*
`--` *UnaryExpression*

UnaryExpression `:`
`delete` *UnaryExpression*
`void` *UnaryExpression*
`typeof` *UnaryExpression*
`+` *UnaryExpression*
`-` *UnaryExpression*
`~` *UnaryExpression*
`!` *UnaryExpression*
AwaitExpression

CallExpression `:`
SuperCall
CallExpression `[` *Expression* `]`
CallExpression `.` *IdentifierName*

NewExpression `:` `new` *NewExpression*

MemberExpression `:`
MemberExpression `[` *Expression* `]`
MemberExpression `.` *IdentifierName*
SuperProperty
MetaProperty
`new` *MemberExpression* *Arguments*

PrimaryExpression `:`
`this`
IdentifierReference
Literal
ArrayLiteral
ObjectLiteral
FunctionExpression
ClassExpression
GeneratorExpression
AsyncFunctionExpression
AsyncGeneratorExpression
RegularExpressionLiteral
TemplateLiteral

1. Return **false**.

Expression **:**
    AssignmentExpression
    Expression **,** *AssignmentExpression*

1. Return HasCallInTailPosition of *AssignmentExpression* with argument *call*.

ConditionalExpression **:** *ShortCircuitExpression* **?** *AssignmentExpression* **:** *AssignmentExpression*

1. Let *has* be HasCallInTailPosition of the first *AssignmentExpression* with argument *call*.
2. If *has* is **true**, return **true**.
3. Return HasCallInTailPosition of the second *AssignmentExpression* with argument *call*.

LogicalANDExpression **:** *LogicalANDExpression* **&&** *BitwiseORExpression*

1. Return HasCallInTailPosition of *BitwiseORExpression* with argument *call*.

LogicalORExpression **:** *LogicalORExpression* **||** *LogicalANDExpression*

1. Return HasCallInTailPosition of *LogicalANDExpression* with argument *call*.

CoalesceExpression **:** *CoalesceExpressionHead* **??** *BitwiseORExpression*

1. Return HasCallInTailPosition of *BitwiseORExpression* with argument *call*.

CallExpression **:**
    CoverCallExpressionAndAsyncArrowHead
    CallExpression *Arguments*
    CallExpression *TemplateLiteral*

1. If this *CallExpression* is *call*, return **true**.
2. Return **false**.

OptionalExpression **:**
    MemberExpression *OptionalChain*
    CallExpression *OptionalChain*
    OptionalExpression *OptionalChain*

1. Return HasCallInTailPosition of *OptionalChain* with argument *call*.

OptionalChain **:**
    ?. **[** *Expression* **]**
    ?. *IdentifierName*
    OptionalChain **[** *Expression* **]**
    OptionalChain **.** *IdentifierName*

1. Return **false**.

OptionalChain **:**
    ?. *Arguments*
    OptionalChain *Arguments*

1. If this *OptionalChain* is *call*, return **true**.

2. Return **false**.

MemberExpression :
    MemberExpression *TemplateLiteral*

1. If this *MemberExpression* is *call*, return **true**.
2. Return **false**.

PrimaryExpression : *CoverParenthesizedExpressionAndArrowParameterList*

1. Let *expr* be CoveredParenthesizedExpression of *CoverParenthesizedExpressionAndArrowParameterList*.
2. Return HasCallInTailPosition of *expr* with argument *call*.

ParenthesizedExpression :
    (*Expression*)

1. Return HasCallInTailPosition of *Expression* with argument *call*.

14.9.3 Runtime Semantics: PrepareForTailCall ( )

The abstract operation PrepareForTailCall performs the following steps:

1. Let *leafContext* be the running execution context.
2. Suspend *leafContext*.
3. Pop *leafContext* from the execution context stack. The execution context now on the top of the stack becomes the running execution context.
4. Assert: *leafContext* has no further use. It will never be activated as the running execution context.

A tail position call must either release any transient internal resources associated with the currently executing function execution context before invoking the target function or reuse those resources in support of the target function.

> NOTE For example, a tail position call should only grow an implementation's activation record stack by the amount that the size of the target function's activation record exceeds the size of the calling function's activation record. If the target function's activation record is smaller, then the total size of the stack should decrease.

15 ECMAScript Language: Scripts and Modules

15.1 Scripts

Syntax

Script :
    ScriptBody$_{\text{opt}}$

ScriptBody :
    StatementList$_{\text{[~Yield, ~Await, ~Return]}}$

15.1.1 Static Semantics: Early Errors

Script : *ScriptBody*

- It is a Syntax Error if the LexicallyDeclaredNames of *ScriptBody* contains any duplicate entries.
- It is a Syntax Error if any element of the LexicallyDeclaredNames of *ScriptBody* also occurs in the VarDeclaredNames of *ScriptBody*.

ScriptBody : *StatementList*

- It is a Syntax Error if *StatementList* Contains `super` unless the source code containing `super` is eval code that is being processed by a direct eval. Additional early error rules for `super` within direct eval are defined in 18.2.1.1.
- It is a Syntax Error if *StatementList* Contains *NewTarget* unless the source code containing *NewTarget* is eval code that is being processed by a direct eval. Additional early error rules for *NewTarget* in direct eval are defined in 18.2.1.1.
- It is a Syntax Error if ContainsDuplicateLabels of *StatementList* with argument « » is **true**.
- It is a Syntax Error if ContainsUndefinedBreakTarget of *StatementList* with argument « » is **true**.
- It is a Syntax Error if ContainsUndefinedContinueTarget of *StatementList* with arguments « » and « » is **true**.

15.1.2 Static Semantics: IsStrict

Script : *ScriptBody*$_{\texttt{opt}}$

1. If *ScriptBody* is present and the Directive Prologue of *ScriptBody* contains a Use Strict Directive, return **true**; otherwise, return **false**.

15.1.3 Static Semantics: LexicallyDeclaredNames

ScriptBody : *StatementList*

1. Return TopLevelLexicallyDeclaredNames of *StatementList*.

NOTE At the top level of a *Script*, function declarations are treated like var declarations rather than like lexical declarations.

15.1.4 Static Semantics: LexicallyScopedDeclarations

ScriptBody : *StatementList*

1. Return TopLevelLexicallyScopedDeclarations of *StatementList*.

15.1.5 Static Semantics: VarDeclaredNames

ScriptBody : *StatementList*

1. Return TopLevelVarDeclaredNames of *StatementList*.

15.1.6 Static Semantics: VarScopedDeclarations

ScriptBody : *StatementList*

1. Return TopLevelVarScopedDeclarations of *StatementList*.

15.1.7 Runtime Semantics: Evaluation

Script : [empty]

1. Return NormalCompletion(**undefined**).

15.1.8 Script Records

A *Script Record* encapsulates information about a script being evaluated. Each script record contains the fields listed in Table 37.

Table 37: **Script Record** Fields

Field Name	Value Type	Meaning
[[Realm]]	Realm Record | **undefined**	The realm within which this script was created. **undefined** if not yet assigned.
[[Environment]]	Lexical Environment | **undefined**	The Lexical Environment containing the top level bindings for this script. This field is set when the script is instantiated.
[[ECMAScriptCode]]	a Parse Node	The result of parsing the source text of this script using *Script* as the goal symbol.
[[HostDefined]]	Any, default value is **undefined**.	Field reserved for use by host environments that need to associate additional information with a script.

15.1.9 ParseScript (*sourceText*, *realm*, *hostDefined*)

The abstract operation ParseScript with arguments *sourceText*, *realm*, and *hostDefined* creates a Script Record based upon the result of parsing *sourceText* as a *Script*. ParseScript performs the following steps:

1. Assert: *sourceText* is an ECMAScript source text (see clause 10).
2. Parse *sourceText* using *Script* as the goal symbol and analyse the parse result for any Early Error conditions. If the parse was successful and no early errors were found, let *body* be the resulting parse tree. Otherwise, let *body* be a List of one or more **SyntaxError** objects representing the parsing errors and/or early errors. Parsing and early error detection may be interweaved in an implementation-dependent manner. If more than one parsing error or early error is present, the number and ordering of error objects in the list is implementation-dependent, but at least one must be present.
3. If *body* is a List of errors, return *body*.
4. Return Script Record { [[Realm]]: *realm*, [[Environment]]: **undefined**, [[ECMAScriptCode]]: *body*, [[HostDefined]]: *hostDefined* }.

NOTE An implementation may parse script source text and analyse it for Early Error conditions prior to evaluation of ParseScript for that script source text. However, the reporting of any errors must be deferred until the point where this specification actually performs ParseScript upon that source text.

15.1.10 ScriptEvaluation (*scriptRecord*)

1. Let *globalEnv* be *scriptRecord*.[[Realm]].[[GlobalEnv]].
2. Let *scriptContext* be a new ECMAScript code execution context.
3. Set the Function of *scriptContext* to **null**.
4. Set the Realm of *scriptContext* to *scriptRecord*.[[Realm]].
5. Set the ScriptOrModule of *scriptContext* to *scriptRecord*.
6. Set the VariableEnvironment of *scriptContext* to *globalEnv*.
7. Set the LexicalEnvironment of *scriptContext* to *globalEnv*.
8. Suspend the currently running execution context.
9. Push *scriptContext* onto the execution context stack; *scriptContext* is now the running execution context.
10. Let *scriptBody* be *scriptRecord*.[[ECMAScriptCode]].
11. Let *result* be GlobalDeclarationInstantiation(*scriptBody*, *globalEnv*).
12. If *result*.[[Type]] is normal, then
    a. Set *result* to the result of evaluating *scriptBody*.
13. If *result*.[[Type]] is normal and *result*.[[Value]] is empty, then
    a. Set *result* to NormalCompletion(**undefined**).
14. Suspend *scriptContext* and remove it from the execution context stack.
15. Assert: The execution context stack is not empty.
16. Resume the context that is now on the top of the execution context stack as the running execution context.
17. Return Completion(*result*).

15.1.11 Runtime Semantics: GlobalDeclarationInstantiation (*script*, *env*)

NOTE 1 When an execution context is established for evaluating scripts, declarations are instantiated in the current global environment. Each global binding declared in the code is instantiated.

GlobalDeclarationInstantiation is performed as follows using arguments *script* and *env*. *script* is the *ScriptBody* for which the execution context is being established. *env* is the global lexical environment in which bindings are to be created.

1. Let *envRec* be *env*'s EnvironmentRecord.
2. Assert: *envRec* is a global Environment Record.
3. Let *lexNames* be the LexicallyDeclaredNames of *script*.
4. Let *varNames* be the VarDeclaredNames of *script*.
5. For each *name* in *lexNames*, do
    a. If *envRec*.HasVarDeclaration(*name*) is **true**, throw a **SyntaxError** exception.
    b. If *envRec*.HasLexicalDeclaration(*name*) is **true**, throw a **SyntaxError** exception.
    c. Let *hasRestrictedGlobal* be ? *envRec*.HasRestrictedGlobalProperty(*name*).
    d. If *hasRestrictedGlobal* is **true**, throw a **SyntaxError** exception.
6. For each *name* in *varNames*, do
    a. If *envRec*.HasLexicalDeclaration(*name*) is **true**, throw a **SyntaxError** exception.
7. Let *varDeclarations* be the VarScopedDeclarations of *script*.
8. Let *functionsToInitialize* be a new empty List.
9. Let *declaredFunctionNames* be a new empty List.
10. For each *d* in *varDeclarations*, in reverse list order, do
    a. If *d* is neither a *VariableDeclaration* nor a *ForBinding* nor a *BindingIdentifier*, then
        i. Assert: *d* is either a *FunctionDeclaration*, a *GeneratorDeclaration*, an *AsyncFunctionDeclaration*, or an *AsyncGeneratorDeclaration*.

ii. NOTE: If there are multiple function declarations for the same name, the last declaration is used.
iii. Let *fn* be the sole element of the BoundNames of *d*.
iv. If *fn* is not an element of *declaredFunctionNames*, then
1. Let *fnDefinable* be ? *envRec*.CanDeclareGlobalFunction(*fn*).
2. If *fnDefinable* is **false**, throw a **TypeError** exception.
3. Append *fn* to *declaredFunctionNames*.
4. Insert *d* as the first element of *functionsToInitialize*.

11. Let *declaredVarNames* be a new empty List.
12. For each *d* in *varDeclarations*, do
    a. If *d* is a *VariableDeclaration*, a *ForBinding*, or a *BindingIdentifier*, then
        i. For each String *vn* in the BoundNames of *d*, do
            1. If *vn* is not an element of *declaredFunctionNames*, then
                a. Let *vnDefinable* be ? *envRec*.CanDeclareGlobalVar(*vn*).
                b. If *vnDefinable* is **false**, throw a **TypeError** exception.
                c. If *vn* is not an element of *declaredVarNames*, then
                i. Append *vn* to *declaredVarNames*.
13. NOTE: No abnormal terminations occur after this algorithm step if the global object is an ordinary object. However, if the global object is a Proxy exotic object it may exhibit behaviours that cause abnormal terminations in some of the following steps.
14. NOTE: Annex B.3.3.2 adds additional steps at this point.
15. Let *lexDeclarations* be the LexicallyScopedDeclarations of *script*.
16. For each element *d* in *lexDeclarations*, do
    a. NOTE: Lexically declared names are only instantiated here but not initialized.
    b. For each element *dn* of the BoundNames of *d*, do
        i. If IsConstantDeclaration of *d* is **true**, then
            1. Perform ? *envRec*.CreateImmutableBinding(*dn*, **true**).
        ii. Else,
            1. Perform ? *envRec*.CreateMutableBinding(*dn*, **false**).
17. For each Parse Node *f* in *functionsToInitialize*, do
    a. Let *fn* be the sole element of the BoundNames of *f*.
    b. Let *fo* be InstantiateFunctionObject of *f* with argument *env*.
    c. Perform ? *envRec*.CreateGlobalFunctionBinding(*fn*, *fo*, **false**).
18. For each String *vn* in *declaredVarNames*, in list order, do
    a. Perform ? *envRec*.CreateGlobalVarBinding(*vn*, **false**).
19. Return NormalCompletion(empty).

NOTE 2 Early errors specified in 15.1.1 prevent name conflicts between function/var declarations and let/const/class declarations as well as redeclaration of let/const/class bindings for declaration contained within a single *Script*. However, such conflicts and redeclarations that span more than one *Script* are detected as runtime errors during GlobalDeclarationInstantiation. If any such errors are detected, no bindings are instantiated for the script. However, if the global object is defined using Proxy exotic objects then the runtime tests for conflicting declarations may be unreliable resulting in an abrupt completion and some global declarations not being instantiated. If this occurs, the code for the *Script* is not evaluated.

Unlike explicit var or function declarations, properties that are directly created on the global object result in global bindings that may be shadowed by let/const/class declarations.

15.2 Modules

Syntax

Module :
  ModuleBody$_{\texttt{opt}}$

ModuleBody :
  ModuleItemList

ModuleItemList :
  ModuleItem
  ModuleItemList *ModuleItem*

ModuleItem :
  ImportDeclaration
  ExportDeclaration
  StatementListItem$_{\texttt{[~Yield, ~Await, ~Return]}}$

15.2.1 Module Semantics

15.2.1.1 Static Semantics: Early Errors

ModuleBody : *ModuleItemList*

- It is a Syntax Error if the LexicallyDeclaredNames of *ModuleItemList* contains any duplicate entries.
- It is a Syntax Error if any element of the LexicallyDeclaredNames of *ModuleItemList* also occurs in the VarDeclaredNames of *ModuleItemList*.
- It is a Syntax Error if the ExportedNames of *ModuleItemList* contains any duplicate entries.
- It is a Syntax Error if any element of the ExportedBindings of *ModuleItemList* does not also occur in either the VarDeclaredNames of *ModuleItemList*, or the LexicallyDeclaredNames of *ModuleItemList*.
- It is a Syntax Error if *ModuleItemList* Contains **`super`**.
- It is a Syntax Error if *ModuleItemList* Contains *NewTarget*.
- It is a Syntax Error if ContainsDuplicateLabels of *ModuleItemList* with argument « » is **true**.
- It is a Syntax Error if ContainsUndefinedBreakTarget of *ModuleItemList* with argument « » is **true**.
- It is a Syntax Error if ContainsUndefinedContinueTarget of *ModuleItemList* with arguments « » and « » is **true**.

NOTE The duplicate ExportedNames rule implies that multiple **`export default`** *ExportDeclaration* items within a *ModuleBody* is a Syntax Error. Additional error conditions relating to conflicting or duplicate declarations are checked during module linking prior to evaluation of a *Module*. If any such errors are detected the *Module* is not evaluated.

15.2.1.2 Static Semantics: ContainsDuplicateLabels

With parameter *labelSet*.

ModuleItemList : *ModuleItemList* *ModuleItem*

1. Let *hasDuplicates* be ContainsDuplicateLabels of *ModuleItemList* with argument *labelSet*.

2. If *hasDuplicates* is **true**, return **true**.
3. Return ContainsDuplicateLabels of *ModuleItem* with argument *labelSet*.

ModuleItem **:**
ImportDeclaration
ExportDeclaration

1. Return **false**.

15.2.1.3 Static Semantics: ContainsUndefinedBreakTarget

With parameter *labelSet*.

ModuleItemList **:** *ModuleItemList* *ModuleItem*

1. Let *hasUndefinedLabels* be ContainsUndefinedBreakTarget of *ModuleItemList* with argument *labelSet*.
2. If *hasUndefinedLabels* is **true**, return **true**.
3. Return ContainsUndefinedBreakTarget of *ModuleItem* with argument *labelSet*.

ModuleItem **:**
ImportDeclaration
ExportDeclaration

1. Return **false**.

15.2.1.4 Static Semantics: ContainsUndefinedContinueTarget

With parameters *iterationSet* and *labelSet*.

ModuleItemList **:** *ModuleItemList* *ModuleItem*

1. Let *hasUndefinedLabels* be ContainsUndefinedContinueTarget of *ModuleItemList* with arguments *iterationSet* and « ».
2. If *hasUndefinedLabels* is **true**, return **true**.
3. Return ContainsUndefinedContinueTarget of *ModuleItem* with arguments *iterationSet* and « ».

ModuleItem **:**
ImportDeclaration
ExportDeclaration

1. Return **false**.

15.2.1.5 Static Semantics: ExportedBindings

NOTE ExportedBindings are the locally bound names that are explicitly associated with a *Module*'s ExportedNames.

ModuleItemList **:** *ModuleItemList* *ModuleItem*

1. Let *names* be ExportedBindings of *ModuleItemList*.
2. Append to *names* the elements of the ExportedBindings of *ModuleItem*.

3. Return *names*.

ModuleItem :
ImportDeclaration
StatementListItem

1. Return a new empty List.

15.2.1.6 Static Semantics: ExportedNames

> NOTE ExportedNames are the externally visible names that a *Module* explicitly maps to one of its local name bindings.

ModuleItemList : *ModuleItemList* *ModuleItem*

1. Let *names* be ExportedNames of *ModuleItemList*.
2. Append to *names* the elements of the ExportedNames of *ModuleItem*.
3. Return *names*.

ModuleItem : *ExportDeclaration*

1. Return the ExportedNames of *ExportDeclaration*.

ModuleItem :
ImportDeclaration
StatementListItem

1. Return a new empty List.

15.2.1.7 Static Semantics: ExportEntries

Module : [empty]

1. Return a new empty List.

ModuleItemList : *ModuleItemList* *ModuleItem*

1. Let *entries* be ExportEntries of *ModuleItemList*.
2. Append to *entries* the elements of the ExportEntries of *ModuleItem*.
3. Return *entries*.

ModuleItem :
ImportDeclaration
StatementListItem

1. Return a new empty List.

15.2.1.8 Static Semantics: ImportEntries

Module : [empty]

1. Return a new empty List.

ModuleItemList : *ModuleItemList* *ModuleItem*

1. Let *entries* be ImportEntries of *ModuleItemList*.
2. Append to *entries* the elements of the ImportEntries of *ModuleItem*.
3. Return *entries*.

ModuleItem :
    ExportDeclaration
    StatementListItem

1. Return a new empty List.

15.2.1.9 Static Semantics: ImportedLocalNames (*importEntries*)

The abstract operation ImportedLocalNames with argument *importEntries* creates a List of all of the local name bindings defined by a List of ImportEntry Records (see Table 43). ImportedLocalNames performs the following steps:

1. Let *localNames* be a new empty List.
2. For each ImportEntry Record *i* in *importEntries*, do
    a. Append *i*.[[LocalName]] to *localNames*.
3. Return *localNames*.

15.2.1.10 Static Semantics: ModuleRequests

Module : [empty]

1. Return a new empty List.

ModuleItemList : *ModuleItem*

1. Return ModuleRequests of *ModuleItem*.

ModuleItemList : *ModuleItemList* *ModuleItem*

1. Let *moduleNames* be ModuleRequests of *ModuleItemList*.
2. Let *additionalNames* be ModuleRequests of *ModuleItem*.
3. Append to *moduleNames* each element of *additionalNames* that is not already an element of *moduleNames*.
4. Return *moduleNames*.

ModuleItem : *StatementListItem*

1. Return a new empty List.

15.2.1.11 Static Semantics: LexicallyDeclaredNames

NOTE 1 The LexicallyDeclaredNames of a *Module* includes the names of all of its imported bindings.

ModuleItemList : *ModuleItemList* *ModuleItem*

1. Let *names* be LexicallyDeclaredNames of *ModuleItemList*.
2. Append to *names* the elements of the LexicallyDeclaredNames of *ModuleItem*.
3. Return *names*.

ModuleItem : *ImportDeclaration*

1. Return the BoundNames of *ImportDeclaration*.

ModuleItem : *ExportDeclaration*

1. If *ExportDeclaration* is **`export`** *VariableStatement*, return a new empty List.
2. Return the BoundNames of *ExportDeclaration*.

ModuleItem : *StatementListItem*

1. Return LexicallyDeclaredNames of *StatementListItem*.

NOTE 2 At the top level of a *Module*, function declarations are treated like lexical declarations rather than like var declarations.

15.2.1.12 Static Semantics: LexicallyScopedDeclarations

Module : [empty]

1. Return a new empty List.

ModuleItemList : *ModuleItemList* *ModuleItem*

1. Let *declarations* be LexicallyScopedDeclarations of *ModuleItemList*.
2. Append to *declarations* the elements of the LexicallyScopedDeclarations of *ModuleItem*.
3. Return *declarations*.

ModuleItem : *ImportDeclaration*

1. Return a new empty List.

15.2.1.13 Static Semantics: VarDeclaredNames

Module : [empty]

1. Return a new empty List.

ModuleItemList : *ModuleItemList* *ModuleItem*

1. Let *names* be VarDeclaredNames of *ModuleItemList*.
2. Append to *names* the elements of the VarDeclaredNames of *ModuleItem*.
3. Return *names*.

ModuleItem : *ImportDeclaration*

1. Return a new empty List.

ModuleItem : *ExportDeclaration*

1. If *ExportDeclaration* is **`export`** *VariableStatement*, return BoundNames of *ExportDeclaration*.
2. Return a new empty List.

15.2.1.14 Static Semantics: VarScopedDeclarations

Module : [empty]

1. Return a new empty List.

ModuleItemList : *ModuleItemList* *ModuleItem*

1. Let *declarations* be VarScopedDeclarations of *ModuleItemList*.
2. Append to *declarations* the elements of the VarScopedDeclarations of *ModuleItem*.
3. Return *declarations*.

ModuleItem : *ImportDeclaration*

1. Return a new empty List.

ModuleItem : *ExportDeclaration*

1. If *ExportDeclaration* is **`export`** *VariableStatement*, return VarScopedDeclarations of *VariableStatement*.
2. Return a new empty List.

15.2.1.15 Abstract Module Records

A *Module Record* encapsulates structural information about the imports and exports of a single module. This information is used to link the imports and exports of sets of connected modules. A Module Record includes four fields that are only used when evaluating a module.

For specification purposes Module Record values are values of the Record specification type and can be thought of as existing in a simple object-oriented hierarchy where Module Record is an abstract class with both abstract and concrete subclasses. This specification defines the abstract subclass named Cyclic Module Record and its concrete subclass named Source Text Module Record. Other specifications and implementations may define additional Module Record subclasses corresponding to alternative module definition facilities that they defined.

Module Record defines the fields listed in Table 38. All Module Definition subclasses include at least those fields. Module Record also defines the abstract method list in Table 39. All Module definition subclasses must provide concrete implementations of these abstract methods.

Table 38: Module Record Fields

Field Name	Value Type	Meaning
[[Realm]]	Realm Record | **undefined**	The Realm within which this module was created. **undefined** if not yet assigned.
[[Environment]]	Lexical Environment | **undefined**	The Lexical Environment containing the top level bindings for this module. This field is set when the module is linked.
[[Namespace]]	Object | **undefined**	The Module Namespace Object (26.3) if one has been created for this module. Otherwise **undefined**.
[[HostDefined]]	Any, default value is **undefined**.	Field reserved for use by host environments that need to associate additional information with a module.

Table 39: Abstract Methods of Module Records

Method	Purpose
GetExportedNames([*exportStarSet*])	Return a list of all names that are either directly or indirectly exported from this module.
ResolveExport(*exportName* [, *resolveSet*])	Return the binding of a name exported by this module. Bindings are represented by a *ResolvedBinding Record*, of the form { [[Module]]: Module Record, [[BindingName]]: String }. If the export is a Module Namespace Object without a direct binding in any module, [[BindingName]] will be set to **"*namespace*"**. Return **null** if the name cannot be resolved, or **"ambiguous"** if multiple bindings were found. Each time this operation is called with a specific *exportName*, *resolveSet* pair as arguments it must return the same result if it completes normally.
Link()	Prepare the module for evaluation by transitively resolving all module dependencies and creating a module Environment Record.
Evaluate()	If this module has already been evaluated successfully, return **undefined**; if it has already been evaluated unsuccessfully, throw the exception that was produced. Otherwise, transitively evaluate all module dependencies of this module and then evaluate this module. Link must have completed successfully prior to invoking this method.

15.2.1.16 Cyclic Module Records

A *Cyclic Module Record* is used to represent information about a module that can participate in dependency cycles with other modules that are subclasses of the Cyclic Module Record type. Module Records that are not subclasses of the Cyclic Module Record type must not participate in dependency cycles with Source Text Module Records.

In addition to the fields defined in Table 38 Cyclic Module Records have the additional fields listed in Table 40

Table 40: Additional Fields of Cyclic Module Records

Field Name	Value Type	Meaning
[[Status]]	unlinked | linking | linked | evaluating | evaluated	Initially unlinked. Transitions to linking, linked, evaluating, evaluated (in that order) as the module progresses throughout its lifecycle.
[[EvaluationError]]	An abrupt completion | **undefined**	A completion of type throw representing the exception that occurred during evaluation. **undefined** if no exception occurred or if [[Status]] is not evaluated.
[[DFSIndex]]	Integer | **undefined**	Auxiliary field used during Link and Evaluate only. If [[Status]] is linking or evaluating, this nonnegative number records the point at which the module was first visited during the ongoing depth-first traversal of the dependency graph.
[[DFSAncestorIndex]]	Integer | **undefined**	Auxiliary field used during Link and Evaluate only. If [[Status]] is linking or evaluating, this is either the module's own [[DFSIndex]] or that of an "earlier" module in the same strongly connected component.
[[RequestedModules]]	List of String	A List of all the *ModuleSpecifier* strings used by the module represented by this record to request the importation of a module. The List is source code occurrence ordered.

In addition to the methods defined in Table 39 Cyclic Module Records have the additional methods listed in Table 41

Table 41: Additional Abstract Methods of Cyclic Module Records

Method	Purpose
InitializeEnvironment()	Initialize the Lexical Environment of the module, including resolving all imported bindings, and create the module's execution context.
ExecuteModule()	Evaluate the module's code within its execution context.

15.2.1.16.1 Link ( ) Concrete Method

The Link concrete method of a Cyclic Module Record implements the corresponding Module Record abstract method.

On success, Link transitions this module's [[Status]] from unlinked to linked. On failure, an exception is thrown and this module's [[Status]] remains unlinked.

This abstract method performs the following steps (most of the work is done by the auxiliary function InnerModuleLinking):

1. Let *module* be this Cyclic Module Record.
2. Assert: *module*.[[Status]] is not linking or evaluating.
3. Let *stack* be a new empty List.

4. Let *result* be InnerModuleLinking(*module*, *stack*, 0).
5. If *result* is an abrupt completion, then
    a. For each Cyclic Module Record *m* in *stack*, do
        i. Assert: *m*.[[Status]] is linking.
        ii. Set *m*.[[Status]] to unlinked.
        iii. Set *m*.[[Environment]] to **undefined**.
        iv. Set *m*.[[DFSIndex]] to **undefined**.
        v. Set *m*.[[DFSAncestorIndex]] to **undefined**.
    b. Assert: *module*.[[Status]] is unlinked.
    c. Return *result*.
6. Assert: *module*.[[Status]] is linked or evaluated.
7. Assert: *stack* is empty.
8. Return **undefined**.

15.2.1.16.1.1 InnerModuleLinking (*module*, *stack*, *index*)

The InnerModuleLinking abstract operation is used by Link to perform the actual linking process for the Cyclic Module Record *module*, as well as recursively on all other modules in the dependency graph. The *stack* and *index* parameters, as well as a module's [[DFSIndex]] and [[DFSAncestorIndex]] fields, keep track of the depth-first search (DFS) traversal. In particular, [[DFSAncestorIndex]] is used to discover strongly connected components (SCCs), such that all modules in an SCC transition to linked together.

This abstract operation performs the following steps:

1. If *module* is not a Cyclic Module Record, then
    a. Perform ? *module*.Link().
    b. Return *index*.
2. If *module*.[[Status]] is linking, linked, or evaluated, then
    a. Return *index*.
3. Assert: *module*.[[Status]] is unlinked.
4. Set *module*.[[Status]] to linking.
5. Set *module*.[[DFSIndex]] to *index*.
6. Set *module*.[[DFSAncestorIndex]] to *index*.
7. Set *index* to *index* + 1.
8. Append *module* to *stack*.
9. For each String *required* that is an element of *module*.[[RequestedModules]], do
    a. Let *requiredModule* be ? HostResolveImportedModule(*module*, *required*).
    b. Set *index* to ? InnerModuleLinking(*requiredModule*, *stack*, *index*).
    c. If *requiredModule* is a Cyclic Module Record, then
        i. Assert: *requiredModule*.[[Status]] is either linking, linked, or evaluated.
        ii. Assert: *requiredModule*.[[Status]] is linking if and only if *requiredModule* is in *stack*.
        iii. If *requiredModule*.[[Status]] is linking, then
            1. Set *module*.[[DFSAncestorIndex]] to min(*module*.[[DFSAncestorIndex]], *requiredModule*.[[DFSAncestorIndex]]).
10. Perform ? *module*.InitializeEnvironment().
11. Assert: *module* occurs exactly once in *stack*.
12. Assert: *module*.[[DFSAncestorIndex]] is less than or equal to *module*.[[DFSIndex]].
13. If *module*.[[DFSAncestorIndex]] equals *module*.[[DFSIndex]], then

a. Let *done* be **false**.
b. Repeat, while *done* is **false**,
    i. Let *requiredModule* be the last element in *stack*.
    ii. Remove the last element of *stack*.
    iii. Assert: *requiredModule* is a Cyclic Module Record.
    iv. Set *requiredModule*.[[Status]] to linked.
    v. If *requiredModule* and *module* are the same Module Record, set *done* to **true**.

14. Return *index*.

15.2.1.16.2 Evaluate ( ) Concrete Method

The Evaluate concrete method of a Cyclic Module Record implements the corresponding Module Record abstract method.

Evaluate transitions this module's [[Status]] from linked to evaluated.

If execution results in an exception, that exception is recorded in the [[EvaluationError]] field and rethrown by future invocations of Evaluate.

This abstract method performs the following steps (most of the work is done by the auxiliary function InnerModuleEvaluation):

1. Assert: This call to Evaluate is not happening at the same time as another call to Evaluate within the surrounding agent.
2. Let *module* be this Cyclic Module Record.
3. Assert: *module*.[[Status]] is linked or evaluated.
4. Let *stack* be a new empty List.
5. Let *result* be InnerModuleEvaluation(*module*, *stack*, 0).
6. If *result* is an abrupt completion, then
    a. For each Cyclic Module Record *m* in *stack*, do
        i. Assert: *m*.[[Status]] is evaluating.
        ii. Set *m*.[[Status]] to evaluated.
        iii. Set *m*.[[EvaluationError]] to *result*.
    b. Assert: *module*.[[Status]] is evaluated and *module*.[[EvaluationError]] is *result*.
    c. Return *result*.
7. Assert: *module*.[[Status]] is evaluated and *module*.[[EvaluationError]] is **undefined**.
8. Assert: *stack* is empty.
9. Return **undefined**.

15.2.1.16.2.1 InnerModuleEvaluation (*module*, *stack*, *index*)

The InnerModuleEvaluation abstract operation is used by Evaluate to perform the actual evaluation process for the Source Text Module Record *module*, as well as recursively on all other modules in the dependency graph. The *stack* and *index* parameters, as well as *module*'s [[DFSIndex]] and [[DFSAncestorIndex]] fields, are used the same way as in InnerModuleLinking.

This abstract operation performs the following steps:

1. If *module* is not a Cyclic Module Record, then
    a. Perform ? *module*.Evaluate().

b. Return *index*.

2. If *module*.[[Status]] is evaluated, then
    a. If *module*.[[EvaluationError]] is **undefined**, return *index*.
    b. Otherwise, return *module*.[[EvaluationError]].
3. If *module*.[[Status]] is evaluating, return *index*.
4. Assert: *module*.[[Status]] is linked.
5. Set *module*.[[Status]] to evaluating.
6. Set *module*.[[DFSIndex]] to *index*.
7. Set *module*.[[DFSAncestorIndex]] to *index*.
8. Set *index* to *index* + 1.
9. Append *module* to *stack*.
10. For each String *required* that is an element of *module*.[[RequestedModules]], do
    a. Let *requiredModule* be ! HostResolveImportedModule(*module*, *required*).
    b. NOTE: Link must be completed successfully prior to invoking this method, so every requested module is guaranteed to resolve successfully.
    c. Set *index* to ? InnerModuleEvaluation(*requiredModule*, *stack*, *index*).
    d. If *requiredModule* is a Cyclic Module Record, then
        i. Assert: *requiredModule*.[[Status]] is either evaluating or evaluated.
        ii. Assert: *requiredModule*.[[Status]] is evaluating if and only if *requiredModule* is in *stack*.
        iii. If *requiredModule*.[[Status]] is evaluating, then
            1. Set *module*.[[DFSAncestorIndex]] to min(*module*.[[DFSAncestorIndex]], *requiredModule*.[[DFSAncestorIndex]]).
11. Perform ? *module*.ExecuteModule().
12. Assert: *module* occurs exactly once in *stack*.
13. Assert: *module*.[[DFSAncestorIndex]] is less than or equal to *module*.[[DFSIndex]].
14. If *module*.[[DFSAncestorIndex]] equals *module*.[[DFSIndex]], then
    a. Let *done* be **false**.
    b. Repeat, while *done* is **false**,
        i. Let *requiredModule* be the last element in *stack*.
        ii. Remove the last element of *stack*.
        iii. Assert: *requiredModule* is a Cyclic Module Record.
        iv. Set *requiredModule*.[[Status]] to evaluated.
        v. If *requiredModule* and *module* are the same Module Record, set *done* to **true**.
15. Return *index*.

15.2.1.16.3 Example Cyclic Module Record Graphs

This non-normative section gives a series of examples of the linking and evaluation of a few common module graphs, with a specific focus on how errors can occur.

First consider the following simple module graph:

Figure 2: A simple module graph

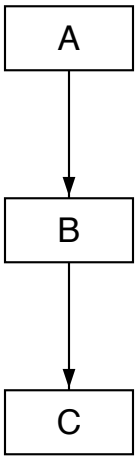

Let's first assume that there are no error conditions. When a host first calls *A*.Link(), this will complete successfully by assumption, and recursively link modules *B* and *C* as well, such that *A*.[[Status]] = *B*.[[Status]] = *C*.[[Status]] = linked. This preparatory step can be performed at any time. Later, when the host is ready to incur any possible side effects of the modules, it can call *A*.Evaluate(), which will complete successfully (again by assumption), recursively having evaluated first *C* and then *B*. Each module's [[Status]] at this point will be evaluated.

Consider then cases involving linking errors. If InnerModuleLinking of *C* succeeds but, thereafter, fails for *B*, for example because it imports something that *C* does not provide, then the original *A*.Link() will fail, and both *A* and *B*'s [[Status]] remain unlinked. *C*'s [[Status]] has become linked, though.

Finally, consider a case involving evaluation errors. If InnerModuleEvaluation of *C* succeeds but, thereafter, fails for *B*, for example because *B* contains code that throws an exception, then the original *A*.Evaluate() will fail. The resulting exception will be recorded in both *A* and *B*'s [[EvaluationError]] fields, and their [[Status]] will become evaluated. *C* will also become evaluated but, in contrast to *A* and *B*, will remain without an [[EvaluationError]], as it successfully completed evaluation. Storing the exception ensures that any time a host tries to reuse *A* or *B* by calling their Evaluate() method, it will encounter the same exception. (Hosts are not required to reuse Cyclic Module Records; similarly, hosts are not required to expose the exception objects thrown by these methods. However, the specification enables such uses.)

The difference here between linking and evaluation errors is due to how evaluation must be only performed once, as it can cause side effects; it is thus important to remember whether evaluation has already been performed, even if unsuccessfully. (In the error case, it makes sense to also remember the exception because otherwise subsequent Evaluate() calls would have to synthesize a new one.) Linking, on the other hand, is side-effect-free, and thus even if it fails, it can be retried at a later time with no issues.

Now consider a different type of error condition:

Figure 3: A module graph with an unresolvable module

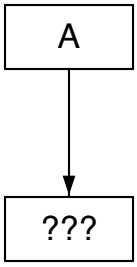

In this scenario, module *A* declares a dependency on some other module, but no Module Record exists for that module, i.e. HostResolveImportedModule throws an exception when asked for it. This could occur for a variety of reasons, such as the corresponding resource not existing, or the resource existing but ParseModule throwing an exception when trying to parse the resulting source text. Hosts can choose to expose the cause of failure via the exception they throw from HostResolveImportedModule. In any case, this exception causes a linking failure, which as before results in *A*'s [[Status]] remaining unlinked.

Lastly, consider a module graph with a cycle:

Figure 4: A cyclic module graph

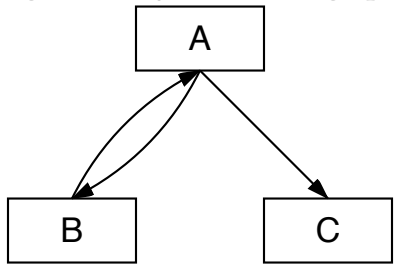

Here we assume that the entry point is module *A*, so that the host proceeds by calling *A*.Link(), which performs InnerModuleLinking on *A*. This in turn calls InnerModuleLinking on *B*. Because of the cycle, this again triggers InnerModuleLinking on *A*, but at this point it is a no-op since *A*.[[Status]] is already linking. *B*.[[Status]] itself remains linking when control gets back to *A* and InnerModuleLinking is triggered on *C*. After this returns with *C*.[[Status]] being linked , both *A* and *B* transition from linking to linked together; this is by design, since they form a strongly connected component.

An analogous story occurs for the evaluation phase of a cyclic module graph, in the success case.

Now consider a case where *A* has an linking error; for example, it tries to import a binding from *C* that does not exist. In that case, the above steps still occur, including the early return from the second call to InnerModuleLinking on *A*. However, once we unwind back to the original InnerModuleLinking on *A*, it fails during InitializeEnvironment, namely right after *C*.ResolveExport(). The thrown **SyntaxError** exception propagates up to *A*.Link, which resets all modules that are currently on its *stack* (these are always exactly the modules that are still linking). Hence both *A* and *B* become unlinked. Note that *C* is left as linked.

Finally, consider a case where *A* has an evaluation error; for example, its source code throws an exception. In that case, the evaluation-time analog of the above steps still occurs, including the early return from the second call to InnerModuleEvaluation on *A*. However, once we unwind back to the original InnerModuleEvaluation on *A*, it fails by assumption. The exception thrown propagates up to *A*.Evaluate(), which records the error in all modules that are currently on its *stack* (i.e., the modules that are still evaluating). Hence both *A* and *B* become evaluated and the exception is recorded in both *A* and *B*'s [[EvaluationError]] fields, while *C* is left as evaluated with no [[EvaluationError]].

15.2.1.17 Source Text Module Records

A *Source Text Module Record* is used to represent information about a module that was defined from ECMAScript source text (10) that was parsed using the goal symbol *Module*. Its fields contain digested information about the names that are imported by the module and its concrete methods use this digest to link, link, and evaluate the module.

A Source Text Module Record can exist in a module graph with other subclasses of the abstract Module Record type,

and can participate in cycles with other subclasses of the Cyclic Module Record type.

In addition to the fields defined in Table 40, Source Text Module Records have the additional fields listed in Table 42. Each of these fields is initially set in ParseModule.

Table 42: Additional Fields of Source Text Module Records

Field Name	Value Type	Meaning
[[ECMAScriptCode]]	a Parse Node	The result of parsing the source text of this module using *Module* as the goal symbol.
[[Context]]	An ECMAScript execution context.	The execution context associated with this module.
[[ImportMeta]]	Object	An object exposed through the `import.meta` meta property. It is empty until it is accessed by ECMAScript code.
[[ImportEntries]]	List of ImportEntry Records	A List of ImportEntry records derived from the code of this module.
[[LocalExportEntries]]	List of ExportEntry Records	A List of ExportEntry records derived from the code of this module that correspond to declarations that occur within the module.
[[IndirectExportEntries]]	List of ExportEntry Records	A List of ExportEntry records derived from the code of this module that correspond to reexported imports that occur within the module or exports from `export * as namespace` declarations.
[[StarExportEntries]]	List of ExportEntry Records	A List of ExportEntry records derived from the code of this module that correspond to `export *` declarations that occur within the module, not including `export * as namespace` declarations.

An *ImportEntry Record* is a Record that digests information about a single declarative import. Each ImportEntry Record has the fields defined in Table 43:

Table 43: ImportEntry Record Fields

Field Name	Value Type	Meaning
[[ModuleRequest]]	String	String value of the *ModuleSpecifier* of the *ImportDeclaration*.
[[ImportName]]	String	The name under which the desired binding is exported by the module identified by [[ModuleRequest]]. The value "*" indicates that the import request is for the target module's namespace object.
[[LocalName]]	String	The name that is used to locally access the imported value from within the importing module.

NOTE 1 Table 44 gives examples of ImportEntry records fields used to represent the syntactic import forms:

Table 44 (Informative): Import Forms Mappings to ImportEntry Records

Import Statement Form	[[ModuleRequest]]	[[ImportName]]	[[LocalName]]
`import v from "mod";`	"mod"	"default"	"v"
`import * as ns from "mod";`	"mod"	"*"	"ns"
`import {x} from "mod";`	"mod"	"x"	"x"
`import {x as v} from "mod";`	"mod"	"x"	"v"
`import "mod";`	An ImportEntry Record is not created.		

An *ExportEntry Record* is a Record that digests information about a single declarative export. Each ExportEntry Record has the fields defined in Table 45:

Table 45: ExportEntry Record Fields

Field Name	Value Type	Meaning
[[ExportName]]	String | null	The name used to export this binding by this module.
[[ModuleRequest]]	String | null	The String value of the *ModuleSpecifier* of the *ExportDeclaration*. **null** if the *ExportDeclaration* does not have a *ModuleSpecifier*.
[[ImportName]]	String | null	The name under which the desired binding is exported by the module identified by [[ModuleRequest]]. **null** if the *ExportDeclaration* does not have a *ModuleSpecifier*. **"*"** indicates that the export request is for all exported bindings.
[[LocalName]]	String | null	The name that is used to locally access the exported value from within the importing module. **null** if the exported value is not locally accessible from within the module.

NOTE 2 Table 46 gives examples of the ExportEntry record fields used to represent the syntactic export forms:

Table 46 (Informative): Export Forms Mappings to ExportEntry Records

Export Statement Form	[[ExportName]]	[[ModuleRequest]]	[[ImportName
`export var v;`	"v"	null	null
`export default function f() {}`	"default"	null	null
`export default function () {}`	"default"	null	null
`export default 42;`	"default"	null	null
`export {x};`	"x"	null	null
`export {v as x};`	"x"	null	null
`export {x} from "mod";`	"x"	"mod"	"x"
`export {v as x} from "mod";`	"x"	"mod"	"v"
`export * from "mod";`	null	"mod"	"*"
`export * as ns from "mod";`	"ns"	"mod"	"*"

The following definitions specify the required concrete methods and other abstract operations for Source Text Module Records

15.2.1.17.1 ParseModule (*sourceText*, *realm*, *hostDefined*)

The abstract operation ParseModule with arguments *sourceText*, *realm*, and *hostDefined* creates a Source Text Module Record based upon the result of parsing *sourceText* as a *Module*. ParseModule performs the following steps:

1. Assert: *sourceText* is an ECMAScript source text (see clause 10).
2. Parse *sourceText* using *Module* as the goal symbol and analyse the parse result for any Early Error conditions. If the parse was successful and no early errors were found, let *body* be the resulting parse tree. Otherwise, let *body* be a List of one or more **SyntaxError** objects representing the parsing errors and/or early errors. Parsing and early error detection may be interweaved in an implementation-dependent manner. If more than one parsing error or early error is present, the number and ordering of error objects in the list is implementation-dependent, but at least one must be present.
3. If *body* is a List of errors, return *body*.
4. Let *requestedModules* be the ModuleRequests of *body*.
5. Let *importEntries* be ImportEntries of *body*.
6. Let *importedBoundNames* be ImportedLocalNames(*importEntries*).
7. Let *indirectExportEntries* be a new empty List.
8. Let *localExportEntries* be a new empty List.
9. Let *starExportEntries* be a new empty List.
10. Let *exportEntries* be ExportEntries of *body*.
11. For each ExportEntry Record *ee* in *exportEntries*, do

a. If *ee*.[[ModuleRequest]] is **null**, then
    i. If *ee*.[[LocalName]] is not an element of *importedBoundNames*, then
        1. Append *ee* to *localExportEntries*.
    ii. Else,
        1. Let *ie* be the element of *importEntries* whose [[LocalName]] is the same as *ee*.[[LocalName]].
        2. If *ie*.[[ImportName]] is **"*"**, then
            a. NOTE: This is a re-export of an imported module namespace object.
            b. Append *ee* to *localExportEntries*.
        3. Else,
            a. NOTE: This is a re-export of a single name.
            b. Append the ExportEntry Record { [[ModuleRequest]]: *ie*.[[ModuleRequest]], [[ImportName]]: *ie*.[[ImportName]], [[LocalName]]: **null**, [[ExportName]]: *ee*.[[ExportName]] } to *indirectExportEntries*.
b. Else if *ee*.[[ImportName]] is **"*"** and *ee*.[[ExportName]] is **null**, then
    i. Append *ee* to *starExportEntries*.
c. Else,
    i. Append *ee* to *indirectExportEntries*.

12. Return Source Text Module Record { [[Realm]]: *realm*, [[Environment]]: **undefined**, [[Namespace]]: **undefined**, [[Status]]: unlinked, [[EvaluationError]]: **undefined**, [[HostDefined]]: *hostDefined*, [[ECMAScriptCode]]: *body*, [[Context]]: empty, [[ImportMeta]]: empty, [[RequestedModules]]: *requestedModules*, [[ImportEntries]]: *importEntries*, [[LocalExportEntries]]: *localExportEntries*, [[IndirectExportEntries]]: *indirectExportEntries*, [[StarExportEntries]]: *starExportEntries*, [[DFSIndex]]: **undefined**, [[DFSAncestorIndex]]: **undefined** }.

NOTE An implementation may parse module source text and analyse it for Early Error conditions prior to the evaluation of ParseModule for that module source text. However, the reporting of any errors must be deferred until the point where this specification actually performs ParseModule upon that source text.

15.2.1.17.2 GetExportedNames ([*exportStarSet*]) Concrete Method

The GetExportedNames concrete method of a Source Text Module Record implements the corresponding Module Record abstract method.

It performs the following steps:

1. If *exportStarSet* is not present, set *exportStarSet* to a new empty List.
2. Assert: *exportStarSet* is a List of Source Text Module Records.
3. Let *module* be this Source Text Module Record.
4. If *exportStarSet* contains *module*, then
    a. Assert: We've reached the starting point of an `export *` circularity.
    b. Return a new empty List.
5. Append *module* to *exportStarSet*.
6. Let *exportedNames* be a new empty List.
7. For each ExportEntry Record *e* in *module*.[[LocalExportEntries]], do
    a. Assert: *module* provides the direct binding for this export.
    b. Append *e*.[[ExportName]] to *exportedNames*.
8. For each ExportEntry Record *e* in *module*.[[IndirectExportEntries]], do

    a. Assert: *module* imports a specific binding for this export.
    b. Append *e*.[[ExportName]] to *exportedNames*.
9. For each ExportEntry Record *e* in *module*.[[StarExportEntries]], do
    a. Let *requestedModule* be ? HostResolveImportedModule(*module*, *e*.[[ModuleRequest]]).
    b. Let *starNames* be ? *requestedModule*.GetExportedNames(*exportStarSet*).
    c. For each element *n* of *starNames*, do
        i. If SameValue(*n*, **"default"**) is **false**, then
            1. If *n* is not an element of *exportedNames*, then
                a. Append *n* to *exportedNames*.
10. Return *exportedNames*.

NOTE GetExportedNames does not filter out or throw an exception for names that have ambiguous star export bindings.

15.2.1.17.3 ResolveExport (*exportName* [, *resolveSet*]) Concrete Method

The ResolveExport concrete method of a Source Text Module Record implements the corresponding Module Record abstract method.

ResolveExport attempts to resolve an imported binding to the actual defining module and local binding name. The defining module may be the module represented by the Module Record this method was invoked on or some other module that is imported by that module. The parameter *resolveSet* is used to detect unresolved circular import/export paths. If a pair consisting of specific Module Record and *exportName* is reached that is already in *resolveSet*, an import circularity has been encountered. Before recursively calling ResolveExport, a pair consisting of *module* and *exportName* is added to *resolveSet*.

If a defining module is found, a ResolvedBinding Record { [[Module]], [[BindingName]] } is returned. This record identifies the resolved binding of the originally requested export, unless this is the export of a namespace with no local binding. In this case, [[BindingName]] will be set to **"*namespace*"**. If no definition was found or the request is found to be circular, **null** is returned. If the request is found to be ambiguous, the string **"ambiguous"** is returned.

This abstract method performs the following steps:

1. If *resolveSet* is not present, set *resolveSet* to a new empty List.
2. Assert: *resolveSet* is a List of Record { [[Module]], [[ExportName]] }.
3. Let *module* be this Source Text Module Record.
4. For each Record { [[Module]], [[ExportName]] } *r* in *resolveSet*, do
    a. If *module* and *r*.[[Module]] are the same Module Record and SameValue(*exportName*, *r*.[[ExportName]]) is **true**, then
        i. Assert: This is a circular import request.
        ii. Return **null**.
5. Append the Record { [[Module]]: *module*, [[ExportName]]: *exportName* } to *resolveSet*.
6. For each ExportEntry Record *e* in *module*.[[LocalExportEntries]], do
    a. If SameValue(*exportName*, *e*.[[ExportName]]) is **true**, then
        i. Assert: *module* provides the direct binding for this export.
        ii. Return ResolvedBinding Record { [[Module]]: *module*, [[BindingName]]: *e*.[[LocalName]] }.
7. For each ExportEntry Record *e* in *module*.[[IndirectExportEntries]], do
    a. If SameValue(*exportName*, *e*.[[ExportName]]) is **true**, then
        i. Let *importedModule* be ? HostResolveImportedModule(*module*, *e*.[[ModuleRequest]]).

ii. If *e*.[[ImportName]] is **"*"**, then
    1. Assert: *module* does not provide the direct binding for this export.
    2. Return ResolvedBinding Record { [[Module]]: *importedModule*, [[BindingName]]: **"*namespace*"** }.
iii. Else,
    1. Assert: *module* imports a specific binding for this export.
    2. Return *importedModule*.ResolveExport(*e*.[[ImportName]], *resolveSet*).

8. If SameValue(*exportName*, **"default"**) is **true**, then
    a. Assert: A `default` export was not explicitly defined by this module.
    b. Return **null**.
    c. NOTE: A `default` export cannot be provided by an `export *` or `export * from "mod"` declaration.
9. Let *starResolution* be **null**.
10. For each ExportEntry Record *e* in *module*.[[StarExportEntries]], do
    a. Let *importedModule* be ? HostResolveImportedModule(*module*, *e*.[[ModuleRequest]]).
    b. Let *resolution* be ? *importedModule*.ResolveExport(*exportName*, *resolveSet*).
    c. If *resolution* is **"ambiguous"**, return **"ambiguous"**.
    d. If *resolution* is not **null**, then
        i. Assert: *resolution* is a ResolvedBinding Record.
        ii. If *starResolution* is **null**, set *starResolution* to *resolution*.
        iii. Else,
            1. Assert: There is more than one `*` import that includes the requested name.
            2. If *resolution*.[[Module]] and *starResolution*.[[Module]] are not the same Module Record or SameValue(*resolution*.[[BindingName]], *starResolution*.[[BindingName]]) is **false**, return **"ambiguous"**.
11. Return *starResolution*.

15.2.1.17.4 InitializeEnvironment ( ) Concrete Method

The InitializeEnvironment concrete method of a Source Text Module Record implements the corresponding Cyclic Module Record abstract method.

This abstract method performs the following steps:

1. Let *module* be this Source Text Module Record.
2. For each ExportEntry Record *e* in *module*.[[IndirectExportEntries]], do
    a. Let *resolution* be ? *module*.ResolveExport(*e*.[[ExportName]]).
    b. If *resolution* is **null** or **"ambiguous"**, throw a **SyntaxError** exception.
    c. Assert: *resolution* is a ResolvedBinding Record.
3. Assert: All named exports from *module* are resolvable.
4. Let *realm* be *module*.[[Realm]].
5. Assert: *realm* is not **undefined**.
6. Let *env* be NewModuleEnvironment(*realm*.[[GlobalEnv]]).
7. Set *module*.[[Environment]] to *env*.
8. Let *envRec* be *env*'s EnvironmentRecord.
9. For each ImportEntry Record *in* in *module*.[[ImportEntries]], do
    a. Let *importedModule* be ! HostResolveImportedModule(*module*, *in*.[[ModuleRequest]]).
    b. NOTE: The above call cannot fail because imported module requests are a subset of *module*.[[RequestedModules]], and these have been resolved earlier in this algorithm.

c. If *in*.[[ImportName]] is **"*"**, then
    i. Let *namespace* be ? GetModuleNamespace(*importedModule*).
    ii. Perform ! *envRec*.CreateImmutableBinding(*in*.[[LocalName]], **true**).
    iii. Call *envRec*.InitializeBinding(*in*.[[LocalName]], *namespace*).
d. Else,
    i. Let *resolution* be ? *importedModule*.ResolveExport(*in*.[[ImportName]]).
    ii. If *resolution* is **null** or **"ambiguous"**, throw a **SyntaxError** exception.
    iii. If *resolution*.[[BindingName]] is **"*namespace*"**, then
        1. Let *namespace* be ? GetModuleNamespace(*resolution*.[[Module]]).
        2. Perform ! *envRec*.CreateImmutableBinding(*in*.[[LocalName]], **true**).
        3. Call *envRec*.InitializeBinding(*in*.[[LocalName]], *namespace*).
    iv. Else,
        1. Call *envRec*.CreateImportBinding(*in*.[[LocalName]], *resolution*.[[Module]], *resolution*.[[BindingName]]).

10. Let *moduleContext* be a new ECMAScript code execution context.
11. Set the Function of *moduleContext* to **null**.
12. Assert: *module*.[[Realm]] is not **undefined**.
13. Set the Realm of *moduleContext* to *module*.[[Realm]].
14. Set the ScriptOrModule of *moduleContext* to *module*.
15. Set the VariableEnvironment of *moduleContext* to *module*.[[Environment]].
16. Set the LexicalEnvironment of *moduleContext* to *module*.[[Environment]].
17. Set *module*.[[Context]] to *moduleContext*.
18. Push *moduleContext* onto the execution context stack; *moduleContext* is now the running execution context.
19. Let *code* be *module*.[[ECMAScriptCode]].
20. Let *varDeclarations* be the VarScopedDeclarations of *code*.
21. Let *declaredVarNames* be a new empty List.
22. For each element *d* in *varDeclarations*, do
    a. For each element *dn* of the BoundNames of *d*, do
        i. If *dn* is not an element of *declaredVarNames*, then
            1. Perform ! *envRec*.CreateMutableBinding(*dn*, **false**).
            2. Call *envRec*.InitializeBinding(*dn*, **undefined**).
            3. Append *dn* to *declaredVarNames*.
23. Let *lexDeclarations* be the LexicallyScopedDeclarations of *code*.
24. For each element *d* in *lexDeclarations*, do
    a. For each element *dn* of the BoundNames of *d*, do
        i. If IsConstantDeclaration of *d* is **true**, then
            1. Perform ! *envRec*.CreateImmutableBinding(*dn*, **true**).
        ii. Else,
            1. Perform ! *envRec*.CreateMutableBinding(*dn*, **false**).
        iii. If *d* is a *FunctionDeclaration*, a *GeneratorDeclaration*, an *AsyncFunctionDeclaration*, or an *AsyncGeneratorDeclaration*, then
            1. Let *fo* be InstantiateFunctionObject of *d* with argument *env*.
            2. Call *envRec*.InitializeBinding(*dn*, *fo*).
25. Remove *moduleContext* from the execution context stack.
26. Return NormalCompletion(empty).

15.2.1.17.5 ExecuteModule ( ) Concrete Method

The ExecuteModule concrete method of a Source Text Module Record implements the corresponding Cyclic Module Record abstract method.

This abstract method performs the following steps:

1. Let *module* be this Source Text Module Record.
2. Suspend the currently running execution context.
3. Let *moduleContext* be *module*.[[Context]].
4. Push *moduleContext* onto the execution context stack; *moduleContext* is now the running execution context.
5. Let *result* be the result of evaluating *module*.[[ECMAScriptCode]].
6. Suspend *moduleContext* and remove it from the execution context stack.
7. Resume the context that is now on the top of the execution context stack as the running execution context.
8. Return Completion(*result*).

15.2.1.18 Runtime Semantics: HostResolveImportedModule (*referencingScriptOrModule*, *specifier*)

HostResolveImportedModule is an implementation-defined abstract operation that provides the concrete Module Record subclass instance that corresponds to the *ModuleSpecifier* String, *specifier*, occurring within the context of the script or module represented by the Script Record or Module Record *referencingScriptOrModule*. *referencingScriptOrModule* may also be **null**, if the resolution is being performed in the context of an `import()` expression, and there is no active script or module at that time.

> NOTE An example of when *referencingScriptOrModule* can be **null** is in a web browser host. There, if a user clicks on a control given by
>
> ```
> <button type="button" onclick="import('./foo.mjs')">Click me</button>
> ```
>
> there will be no active script or module at the time the `import()` expression runs. More generally, this can happen in any situation where the host pushes execution contexts with **null** ScriptOrModule components onto the execution context stack.

The implementation of HostResolveImportedModule must conform to the following requirements:

- The normal return value must be an instance of a concrete subclass of Module Record.
- If a Module Record corresponding to the pair *referencingScriptOrModule*, *specifier* does not exist or cannot be created, an exception must be thrown.
- Each time this operation is called with a specific *referencingScriptOrModule*, *specifier* pair as arguments it must return the same Module Record instance if it completes normally.

Multiple different *referencingScriptOrModule*, *specifier* pairs may map to the same Module Record instance. The actual mapping semantic is implementation-defined but typically a normalization process is applied to *specifier* as part of the mapping process. A typical normalization process would include actions such as alphabetic case folding and expansion of relative and abbreviated path specifiers.

15.2.1.19 Runtime Semantics: HostImportModuleDynamically (*referencingScriptOrModule*, *specifier*, *promiseCapability*)

HostImportModuleDynamically is an implementation-defined abstract operation that performs any necessary setup work in order to make available the module corresponding to the *ModuleSpecifier* String, *specifier*, occurring within the context of the script or module represented by the Script Record or Module Record *referencingScriptOrModule*.

(*referencingScriptOrModule* may also be **null**, if there is no active script or module when the `import()` expression occurs.) It then performs FinishDynamicImport to finish the dynamic import process.

The implementation of HostImportModuleDynamically must conform to the following requirements:

- The abstract operation must always complete normally with **undefined**. Success or failure must instead be signaled as discussed below.
- The host environment must conform to one of the two following sets of requirements:

  Success path
  - At some future time, the host environment must perform FinishDynamicImport(*referencingScriptOrModule*, *specifier*, *promiseCapability*, NormalCompletion(**undefined**)).
  - Any subsequent call to HostResolveImportedModule after FinishDynamicImport has completed, given the arguments *referencingScriptOrModule* and *specifier*, must complete normally.
  - The completion value of any subsequent call to HostResolveImportedModule after FinishDynamicImport has completed, given the arguments *referencingScriptOrModule* and *specifier*, must be a module which has already been evaluated, i.e. whose Evaluate concrete method has already been called and returned a normal completion.

  Failure path
  - At some future time, the host environment must perform FinishDynamicImport(*referencingScriptOrModule*, *specifier*, *promiseCapability*, an abrupt completion), with the abrupt completion representing the cause of failure.

- If the host environment takes the success path once for a given *referencingScriptOrModule*, *specifier* pair, it must always do so for subsequent calls.
- The operation must not call *promiseCapability*.[[Resolve]] or *promiseCapability*.[[Reject]], but instead must treat *promiseCapability* as an opaque identifying value to be passed through to FinishDynamicImport.

The actual process performed is implementation-defined, but typically consists of performing whatever I/O operations are necessary to allow HostResolveImportedModule to synchronously retrieve the appropriate Module Record, and then calling its Evaluate concrete method. This might require performing similar normalization as HostResolveImportedModule does.

15.2.1.20 Runtime Semantics: FinishDynamicImport (*referencingScriptOrModule*, *specifier*, *promiseCapability*, *completion*)

FinishDynamicImport completes the process of a dynamic import originally started by an `import()` call, resolving or rejecting the promise returned by that call as appropriate according to *completion*. It is performed by host environments as part of HostImportModuleDynamically.

1. If *completion* is an abrupt completion, then perform ! Call(*promiseCapability*.[[Reject]], **undefined**, « *completion*.[[Value]] »).
2. Else,
   a. Assert: *completion* is a normal completion and *completion*.[[Value]] is **undefined**.
   b. Let *moduleRecord* be ! HostResolveImportedModule(*referencingScriptOrModule*, *specifier*).
   c. Assert: Evaluate has already been invoked on *moduleRecord* and successfully completed.
   d. Let *namespace* be GetModuleNamespace(*moduleRecord*).
   e. If *namespace* is an abrupt completion, perform ! Call(*promiseCapability*.[[Reject]], **undefined**, « *namespace*.[[Value]] »).

f. Else, perform ! Call(*promiseCapability*.[[Resolve]], **undefined**, « *namespace*.[[Value]] »).

15.2.1.21 Runtime Semantics: GetModuleNamespace (*module*)

The GetModuleNamespace abstract operation retrieves the Module Namespace Object representing *module*'s exports, lazily creating it the first time it was requested, and storing it in *module*.[[Namespace]] for future retrieval.

This abstract operation performs the following steps:

1. Assert: *module* is an instance of a concrete subclass of Module Record.
2. Assert: If *module* is a Cyclic Module Record, then *module*.[[Status]] is not unlinked.
3. Let *namespace* be *module*.[[Namespace]].
4. If *namespace* is **undefined**, then
   a. Let *exportedNames* be ? *module*.GetExportedNames().
   b. Let *unambiguousNames* be a new empty List.
   c. For each *name* that is an element of *exportedNames*, do
      i. Let *resolution* be ? *module*.ResolveExport(*name*).
      ii. If *resolution* is a ResolvedBinding Record, append *name* to *unambiguousNames*.
   d. Set *namespace* to ModuleNamespaceCreate(*module*, *unambiguousNames*).
5. Return *namespace*.

> NOTE The only way GetModuleNamespace can throw is via one of the triggered HostResolveImportedModule calls. Unresolvable names are simply excluded from the namespace at this point. They will lead to a real linking error later unless they are all ambiguous star exports that are not explicitly requested anywhere.

15.2.1.22 Runtime Semantics: Evaluation

Module : [empty]

1. Return NormalCompletion(**undefined**).

ModuleBody : *ModuleItemList*

1. Let *result* be the result of evaluating *ModuleItemList*.
2. If *result*.[[Type]] is normal and *result*.[[Value]] is empty, then
   a. Return NormalCompletion(**undefined**).
3. Return Completion(*result*).

ModuleItemList : *ModuleItemList* *ModuleItem*

1. Let *sl* be the result of evaluating *ModuleItemList*.
2. ReturnIfAbrupt(*sl*).
3. Let *s* be the result of evaluating *ModuleItem*.
4. Return Completion(UpdateEmpty(*s*, *sl*)).

> NOTE The value of a *ModuleItemList* is the value of the last value-producing item in the *ModuleItemList*.

ModuleItem : *ImportDeclaration*

1. Return NormalCompletion(empty).

15.2.2 Imports

Syntax

ImportDeclaration :
  import *ImportClause* *FromClause* **;**
  import *ModuleSpecifier* **;**

ImportClause :
  ImportedDefaultBinding
  NameSpaceImport
  NamedImports
  ImportedDefaultBinding **,** *NameSpaceImport*
  ImportedDefaultBinding **,** *NamedImports*

ImportedDefaultBinding :
  ImportedBinding

NameSpaceImport :
  *** as** *ImportedBinding*

NamedImports :
  { }
  { *ImportsList* **}**
  { *ImportsList* **, }**

FromClause :
  from *ModuleSpecifier*

ImportsList :
  ImportSpecifier
  ImportsList **,** *ImportSpecifier*

ImportSpecifier :
  ImportedBinding
  IdentifierName **as** *ImportedBinding*

ModuleSpecifier :
  StringLiteral

ImportedBinding :
  BindingIdentifier[~Yield, ~Await]

15.2.2.1 Static Semantics: Early Errors

ModuleItem : *ImportDeclaration*

- It is a Syntax Error if the BoundNames of *ImportDeclaration* contains any duplicate entries.

15.2.2.2 Static Semantics: BoundNames

ImportDeclaration : `import` *ImportClause* *FromClause* `;`

1. Return the BoundNames of *ImportClause*.

ImportDeclaration : `import` *ModuleSpecifier* `;`

1. Return a new empty List.

ImportClause : *ImportedDefaultBinding* `,` *NameSpaceImport*

1. Let *names* be the BoundNames of *ImportedDefaultBinding*.
2. Append to *names* the elements of the BoundNames of *NameSpaceImport*.
3. Return *names*.

ImportClause : *ImportedDefaultBinding* `,` *NamedImports*

1. Let *names* be the BoundNames of *ImportedDefaultBinding*.
2. Append to *names* the elements of the BoundNames of *NamedImports*.
3. Return *names*.

NamedImports : `{ }`

1. Return a new empty List.

ImportsList : *ImportsList* `,` *ImportSpecifier*

1. Let *names* be the BoundNames of *ImportsList*.
2. Append to *names* the elements of the BoundNames of *ImportSpecifier*.
3. Return *names*.

ImportSpecifier : *IdentifierName* `as` *ImportedBinding*

1. Return the BoundNames of *ImportedBinding*.

15.2.2.3 Static Semantics: ImportEntries

ImportDeclaration : `import` *ImportClause* *FromClause* `;`

1. Let *module* be the sole element of ModuleRequests of *FromClause*.
2. Return ImportEntriesForModule of *ImportClause* with argument *module*.

ImportDeclaration : `import` *ModuleSpecifier* `;`

1. Return a new empty List.

15.2.2.4 Static Semantics: ImportEntriesForModule

With parameter *module*.

ImportClause : *ImportedDefaultBinding* `,` *NameSpaceImport*

1. Let *entries* be ImportEntriesForModule of *ImportedDefaultBinding* with argument *module*.
2. Append to *entries* the elements of the ImportEntriesForModule of *NameSpaceImport* with argument *module*.
3. Return *entries*.

ImportClause **:** *ImportedDefaultBinding* **,** *NamedImports*

1. Let *entries* be ImportEntriesForModule of *ImportedDefaultBinding* with argument *module*.
2. Append to *entries* the elements of the ImportEntriesForModule of *NamedImports* with argument *module*.
3. Return *entries*.

ImportedDefaultBinding **:** *ImportedBinding*

1. Let *localName* be the sole element of BoundNames of *ImportedBinding*.
2. Let *defaultEntry* be the ImportEntry Record { [[ModuleRequest]]: *module*, [[ImportName]]: **"default"**, [[LocalName]]: *localName* }.
3. Return a new List containing *defaultEntry*.

NameSpaceImport **: * as** *ImportedBinding*

1. Let *localName* be the StringValue of *ImportedBinding*.
2. Let *entry* be the ImportEntry Record { [[ModuleRequest]]: *module*, [[ImportName]]: "*", [[LocalName]]: *localName* }.
3. Return a new List containing *entry*.

NamedImports **: { }**

1. Return a new empty List.

ImportsList **:** *ImportsList* **,** *ImportSpecifier*

1. Let *specs* be the ImportEntriesForModule of *ImportsList* with argument *module*.
2. Append to *specs* the elements of the ImportEntriesForModule of *ImportSpecifier* with argument *module*.
3. Return *specs*.

ImportSpecifier **:** *ImportedBinding*

1. Let *localName* be the sole element of BoundNames of *ImportedBinding*.
2. Let *entry* be the ImportEntry Record { [[ModuleRequest]]: *module*, [[ImportName]]: *localName*, [[LocalName]]: *localName* }.
3. Return a new List containing *entry*.

ImportSpecifier **:** *IdentifierName* **as** *ImportedBinding*

1. Let *importName* be the StringValue of *IdentifierName*.
2. Let *localName* be the StringValue of *ImportedBinding*.
3. Let *entry* be the ImportEntry Record { [[ModuleRequest]]: *module*, [[ImportName]]: *importName*, [[LocalName]]: *localName* }.
4. Return a new List containing *entry*.

15.2.2.5 Static Semantics: ModuleRequests

ImportDeclaration **: import** *ImportClause* *FromClause* **;**

1. Return ModuleRequests of *FromClause*.

ModuleSpecifier **:** *StringLiteral*

1. Return a List containing the StringValue of *StringLiteral*.

15.2.3 Exports

Syntax

ExportDeclaration :
- **export** *ExportFromClause* *FromClause* ;
- **export** *NamedExports* ;
- **export** *VariableStatement*[~Yield, ~Await]
- **export** *Declaration*[~Yield, ~Await]
- **export default** *HoistableDeclaration*[~Yield, ~Await, +Default]
- **export default** *ClassDeclaration*[~Yield, ~Await, +Default]
- **export default** [lookahead ∉ { **function** , **async** [no *LineTerminator* here] **function** , **class** }] *AssignmentExpression*[+In, ~Yield, ~Await] ;

ExportFromClause :
- *
- * **as** *IdentifierName*
- *NamedExports*

NamedExports :
- { }
- { *ExportsList* }
- { *ExportsList* , }

ExportsList :
- *ExportSpecifier*
- *ExportsList* , *ExportSpecifier*

ExportSpecifier :
- *IdentifierName*
- *IdentifierName* **as** *IdentifierName*

15.2.3.1 Static Semantics: Early Errors

ExportDeclaration : **export** *NamedExports* ;

- For each *IdentifierName* *n* in ReferencedBindings of *NamedExports*: It is a Syntax Error if StringValue of *n* is a *ReservedWord* or if the StringValue of *n* is one of: **"implements"**, **"interface"**, **"let"**, **"package"**, **"private"**, **"protected"**, **"public"**, or **"static"**.

> NOTE The above rule means that each ReferencedBindings of *NamedExports* is treated as an *IdentifierReference*.

15.2.3.2 Static Semantics: BoundNames

ExportDeclaration :
- **export** *ExportFromClause* *FromClause* ;
- **export** *NamedExports* ;

1. Return a new empty List.

ExportDeclaration : **export** *VariableStatement*

1. Return the BoundNames of *VariableStatement*.

ExportDeclaration : **export** *Declaration*

1. Return the BoundNames of *Declaration*.

ExportDeclaration : **export default** *HoistableDeclaration*

1. Let *declarationNames* be the BoundNames of *HoistableDeclaration*.
2. If *declarationNames* does not include the element **"*default*"**, append **"*default*"** to *declarationNames*.
3. Return *declarationNames*.

ExportDeclaration : **export default** *ClassDeclaration*

1. Let *declarationNames* be the BoundNames of *ClassDeclaration*.
2. If *declarationNames* does not include the element **"*default*"**, append **"*default*"** to *declarationNames*.
3. Return *declarationNames*.

ExportDeclaration : **export default** *AssignmentExpression* **;**

1. Return « **"*default*"** ».

15.2.3.3 Static Semantics: ExportedBindings

ExportDeclaration :
    export *ExportFromClause* *FromClause* **;**

1. Return a new empty List.

ExportDeclaration : **export** *NamedExports* **;**

1. Return the ExportedBindings of *NamedExports*.

ExportDeclaration : **export** *VariableStatement*

1. Return the BoundNames of *VariableStatement*.

ExportDeclaration : **export** *Declaration*

1. Return the BoundNames of *Declaration*.

ExportDeclaration : **export default** *HoistableDeclaration*
ExportDeclaration : **export default** *ClassDeclaration*
ExportDeclaration : **export default** *AssignmentExpression* **;**

1. Return the BoundNames of this *ExportDeclaration*.

NamedExports : **{ }**

1. Return a new empty List.

ExportsList : *ExportsList* **,** *ExportSpecifier*

1. Let *names* be the ExportedBindings of *ExportsList*.

2. Append to *names* the elements of the ExportedBindings of *ExportSpecifier*.
3. Return *names*.

ExportSpecifier **:** *IdentifierName*

1. Return a List containing the StringValue of *IdentifierName*.

ExportSpecifier **:** *IdentifierName* **as** *IdentifierName*

1. Return a List containing the StringValue of the first *IdentifierName*.

15.2.3.4 Static Semantics: ExportedNames

ExportDeclaration **: export** *ExportFromClause FromClause* **;**

1. Return the ExportedNames of *ExportFromClause*.

ExportFromClause **: ***

1. Return a new empty List.

ExportFromClause **: * as** *IdentifierName*

1. Return a List containing the StringValue of *IdentifierName*.

ExportFromClause **:** *NamedExports*

1. Return the ExportedNames of *NamedExports*.

ExportDeclaration **: export** *VariableStatement*

1. Return the BoundNames of *VariableStatement*.

ExportDeclaration **: export** *Declaration*

1. Return the BoundNames of *Declaration*.

ExportDeclaration **: export default** *HoistableDeclaration*
ExportDeclaration **: export default** *ClassDeclaration*
ExportDeclaration **: export default** *AssignmentExpression* **;**

1. Return « **"default"** ».

NamedExports **: { }**

1. Return a new empty List.

ExportsList **:** *ExportsList* **,** *ExportSpecifier*

1. Let *names* be the ExportedNames of *ExportsList*.
2. Append to *names* the elements of the ExportedNames of *ExportSpecifier*.
3. Return *names*.

ExportSpecifier **:** *IdentifierName*

1. Return a List containing the StringValue of *IdentifierName*.

ExportSpecifier **:** *IdentifierName* **as** *IdentifierName*

1. Return a List containing the StringValue of the second *IdentifierName*.

15.2.3.5 Static Semantics: ExportEntries

ExportDeclaration **:** **export** *ExportFromClause* *FromClause* **;**

1. Let *module* be the sole element of ModuleRequests of *FromClause*.
2. Return ExportEntriesForModule of *ExportFromClause* with argument *module*.

ExportDeclaration **:** **export** *NamedExports* **;**

1. Return ExportEntriesForModule of *NamedExports* with argument **null**.

ExportDeclaration **:** **export** *VariableStatement*

1. Let *entries* be a new empty List.
2. Let *names* be the BoundNames of *VariableStatement*.
3. For each *name* in *names*, do
   a. Append the ExportEntry Record { [[ModuleRequest]]: **null**, [[ImportName]]: **null**, [[LocalName]]: *name*, [[ExportName]]: *name* } to *entries*.
4. Return *entries*.

ExportDeclaration **:** **export** *Declaration*

1. Let *entries* be a new empty List.
2. Let *names* be the BoundNames of *Declaration*.
3. For each *name* in *names*, do
   a. Append the ExportEntry Record { [[ModuleRequest]]: **null**, [[ImportName]]: **null**, [[LocalName]]: *name*, [[ExportName]]: *name* } to *entries*.
4. Return *entries*.

ExportDeclaration **:** **export default** *HoistableDeclaration*

1. Let *names* be BoundNames of *HoistableDeclaration*.
2. Let *localName* be the sole element of *names*.
3. Return a new List containing the ExportEntry Record { [[ModuleRequest]]: **null**, [[ImportName]]: **null**, [[LocalName]]: *localName*, [[ExportName]]: **"default"** }.

ExportDeclaration **:** **export default** *ClassDeclaration*

1. Let *names* be BoundNames of *ClassDeclaration*.
2. Let *localName* be the sole element of *names*.
3. Return a new List containing the ExportEntry Record { [[ModuleRequest]]: **null**, [[ImportName]]: **null**, [[LocalName]]: *localName*, [[ExportName]]: **"default"** }.

ExportDeclaration **:** **export default** *AssignmentExpression* **;**

1. Let *entry* be the ExportEntry Record { [[ModuleRequest]]: **null**, [[ImportName]]: **null**, [[LocalName]]: **"*default*"**, [[ExportName]]: **"default"** }.
2. Return a new List containing *entry*.

NOTE "*default*" is used within this specification as a synthetic name for anonymous default export values.

15.2.3.6 Static Semantics: ExportEntriesForModule

With parameter *module*.

ExportFromClause : `*`

1. Let *entry* be the ExportEntry Record { [[ModuleRequest]]: *module*, [[ImportName]]: "*", [[LocalName]]: **null**, [[ExportName]]: **null** }.
2. Return a new List containing *entry*.

ExportFromClause : `*` **as** *IdentifierName*

1. Let *exportName* be the StringValue of *IdentifierName*.
2. Let *entry* be the ExportEntry Record { [[ModuleRequest]]: *module*, [[ImportName]]: "*", [[LocalName]]: **null**, [[ExportName]]: *exportName* }.
3. Return a new List containing *entry*.

NamedExports : `{ }`

1. Return a new empty List.

ExportsList : *ExportsList* `,` *ExportSpecifier*

1. Let *specs* be the ExportEntriesForModule of *ExportsList* with argument *module*.
2. Append to *specs* the elements of the ExportEntriesForModule of *ExportSpecifier* with argument *module*.
3. Return *specs*.

ExportSpecifier : *IdentifierName*

1. Let *sourceName* be the StringValue of *IdentifierName*.
2. If *module* is **null**, then
   a. Let *localName* be *sourceName*.
   b. Let *importName* be **null**.
3. Else,
   a. Let *localName* be **null**.
   b. Let *importName* be *sourceName*.
4. Return a new List containing the ExportEntry Record { [[ModuleRequest]]: *module*, [[ImportName]]: *importName*, [[LocalName]]: *localName*, [[ExportName]]: *sourceName* }.

ExportSpecifier : *IdentifierName* **as** *IdentifierName*

1. Let *sourceName* be the StringValue of the first *IdentifierName*.
2. Let *exportName* be the StringValue of the second *IdentifierName*.
3. If *module* is **null**, then
   a. Let *localName* be *sourceName*.
   b. Let *importName* be **null**.
4. Else,
   a. Let *localName* be **null**.

b. Let *importName* be *sourceName*.

5. Return a new List containing the ExportEntry Record { [[ModuleRequest]]: *module*, [[ImportName]]: *importName*, [[LocalName]]: *localName*, [[ExportName]]: *exportName* }.

15.2.3.7 Static Semantics: IsConstantDeclaration

ExportDeclaration :

`export` *ExportFromClause* *FromClause* `;`

`export` *NamedExports* `;`

`export default` *AssignmentExpression* `;`

1. Return **false**.

NOTE It is not necessary to treat `export default` *AssignmentExpression* as a constant declaration because there is no syntax that permits assignment to the internal bound name used to reference a module's default object.

15.2.3.8 Static Semantics: LexicallyScopedDeclarations

ExportDeclaration :

`export` *ExportFromClause* *FromClause* `;`

`export` *NamedExports* `;`

`export` *VariableStatement*

1. Return a new empty List.

ExportDeclaration : `export` *Declaration*

1. Return a new List containing DeclarationPart of *Declaration*.

ExportDeclaration : `export default` *HoistableDeclaration*

1. Return a new List containing DeclarationPart of *HoistableDeclaration*.

ExportDeclaration : `export default` *ClassDeclaration*

1. Return a new List containing *ClassDeclaration*.

ExportDeclaration : `export default` *AssignmentExpression* `;`

1. Return a new List containing this *ExportDeclaration*.

15.2.3.9 Static Semantics: ModuleRequests

ExportDeclaration : `export` *ExportFromClause* *FromClause* `;`

1. Return the ModuleRequests of *FromClause*.

ExportDeclaration :

`export` *NamedExports* `;`

`export` *VariableStatement*

`export` *Declaration*

`export default` *HoistableDeclaration*

`export default` *ClassDeclaration*

`export default` *AssignmentExpression* `;`

1. Return a new empty List.

15.2.3.10 Static Semantics: ReferencedBindings

NamedExports `: { }`

1. Return a new empty List.

ExportsList `:` *ExportsList* `,` *ExportSpecifier*

1. Let *names* be the ReferencedBindings of *ExportsList*.
2. Append to *names* the elements of the ReferencedBindings of *ExportSpecifier*.
3. Return *names*.

ExportSpecifier `:` *IdentifierName*

1. Return a List containing the *IdentifierName*.

ExportSpecifier `:` *IdentifierName* `as` *IdentifierName*

1. Return a List containing the first *IdentifierName*.

15.2.3.11 Runtime Semantics: Evaluation

ExportDeclaration `:`

`export` *ExportFromClause* *FromClause* `;`

`export` *NamedExports* `;`

1. Return NormalCompletion(empty).

ExportDeclaration `: export` *VariableStatement*

1. Return the result of evaluating *VariableStatement*.

ExportDeclaration `: export` *Declaration*

1. Return the result of evaluating *Declaration*.

ExportDeclaration `: export default` *HoistableDeclaration*

1. Return the result of evaluating *HoistableDeclaration*.

ExportDeclaration `: export default` *ClassDeclaration*

1. Let *value* be ? BindingClassDeclarationEvaluation of *ClassDeclaration*.
2. Let *className* be the sole element of BoundNames of *ClassDeclaration*.
3. If *className* is **"*default*"**, then
   a. Let *env* be the running execution context's LexicalEnvironment.
   b. Perform ? InitializeBoundName(**"*default*"**, *value*, *env*).
4. Return NormalCompletion(empty).

ExportDeclaration `: export default` *AssignmentExpression* `;`

1. If IsAnonymousFunctionDefinition(*AssignmentExpression*) is **true**, then
    a. Let *value* be NamedEvaluation of *AssignmentExpression* with argument **"default"**.
2. Else,
    a. Let *rhs* be the result of evaluating *AssignmentExpression*.
    b. Let *value* be ? GetValue(*rhs*).
3. Let *env* be the running execution context's LexicalEnvironment.
4. Perform ? InitializeBoundName(**"*default*"**, *value*, *env*).
5. Return NormalCompletion(empty).

16 Error Handling and Language Extensions

An implementation must report most errors at the time the relevant ECMAScript language construct is evaluated. An *early error* is an error that can be detected and reported prior to the evaluation of any construct in the *Script* containing the error. The presence of an early error prevents the evaluation of the construct. An implementation must report early errors in a *Script* as part of parsing that *Script* in ParseScript. Early errors in a *Module* are reported at the point when the *Module* would be evaluated and the *Module* is never initialized. Early errors in **eval** code are reported at the time `eval` is called and prevent evaluation of the **eval** code. All errors that are not early errors are runtime errors.

An implementation must report as an early error any occurrence of a condition that is listed in a "Static Semantics: Early Errors" subclause of this specification.

An implementation shall not treat other kinds of errors as early errors even if the compiler can prove that a construct cannot execute without error under any circumstances. An implementation may issue an early warning in such a case, but it should not report the error until the relevant construct is actually executed.

An implementation shall report all errors as specified, except for the following:

- Except as restricted in 16.1, an implementation may extend *Script* syntax, *Module* syntax, and regular expression pattern or flag syntax. To permit this, all operations (such as calling `eval`, using a regular expression literal, or using the `Function` or `RegExp` constructor) that are allowed to throw **SyntaxError** are permitted to exhibit implementation-defined behaviour instead of throwing **SyntaxError** when they encounter an implementation-defined extension to the script syntax or regular expression pattern or flag syntax.
- Except as restricted in 16.1, an implementation may provide additional types, values, objects, properties, and functions beyond those described in this specification. This may cause constructs (such as looking up a variable in the global scope) to have implementation-defined behaviour instead of throwing an error (such as **ReferenceError**).

16.1 Forbidden Extensions

An implementation must not extend this specification in the following ways:

- ECMAScript function objects defined using syntactic constructors in strict mode code must not be created with own properties named **"caller"** or **"arguments"**. Such own properties also must not be created for function objects defined using an *ArrowFunction*, *MethodDefinition*, *GeneratorDeclaration*, *GeneratorExpression*, *AsyncGeneratorDeclaration*, *AsyncGeneratorExpression*, *ClassDeclaration*, *ClassExpression*, *AsyncFunctionDeclaration*, *AsyncFunctionExpression*, or *AsyncArrowFunction* regardless of whether the definition is contained in strict mode code. Built-in functions, strict functions created using the `Function` constructor, generator functions

created using the **`Generator`** constructor, async functions created using the **`AsyncFunction`** constructor, and functions created using the **`bind`** method also must not be created with such own properties.

- If an implementation extends any function object with an own property named **"caller"** the value of that property, as observed using [[Get]] or [[GetOwnProperty]], must not be a strict function object. If it is an accessor property, the function that is the value of the property's [[Get]] attribute must never return a strict function when called.
- Neither mapped nor unmapped arguments objects may be created with an own property named **"caller"**.
- The behaviour of the following methods must not be extended except as specified in ECMA-402: **`Object.prototype.toLocaleString`**, **`Array.prototype.toLocaleString`**, **`Number.prototype.toLocaleString`**, **`Date.prototype.toLocaleDateString`**, **`Date.prototype.toLocaleString`**, **`Date.prototype.toLocaleTimeString`**, **`String.prototype.localeCompare`**, %TypedArray%**`.prototype.toLocaleString`**.
- The RegExp pattern grammars in 21.2.1 and B.1.4 must not be extended to recognize any of the source characters A-Z or a-z as *IdentityEscape*$_{[+U]}$ when the [U] grammar parameter is present.
- The Syntactic Grammar must not be extended in any manner that allows the token **`:`** to immediately follow source text that matches the *BindingIdentifier* nonterminal symbol.
- When processing strict mode code, the syntax of *NumericLiteral* must not be extended to include *LegacyOctalIntegerLiteral* and the syntax of *DecimalIntegerLiteral* must not be extended to include *NonOctalDecimalIntegerLiteral* as described in B.1.1.
- *TemplateCharacter* must not be extended to include *LegacyOctalEscapeSequence* as defined in B.1.2.
- When processing strict mode code, the extensions defined in B.3.2, B.3.3, B.3.4, and B.3.6 must not be supported.
- When parsing for the *Module* goal symbol, the lexical grammar extensions defined in B.1.3 must not be supported.
- *ImportCall* must not be extended.

17 ECMAScript Standard Built-in Objects

There are certain built-in objects available whenever an ECMAScript *Script* or *Module* begins execution. One, the global object, is part of the lexical environment of the executing program. Others are accessible as initial properties of the global object or indirectly as properties of accessible built-in objects.

Unless specified otherwise, a built-in object that is callable as a function is a built-in function object with the characteristics described in 9.3. Unless specified otherwise, the [[Extensible]] internal slot of a built-in object initially has the value **true**. Every built-in function object has a [[Realm]] internal slot whose value is the Realm Record of the realm for which the object was initially created.

Many built-in objects are functions: they can be invoked with arguments. Some of them furthermore are constructors: they are functions intended for use with the **`new`** operator. For each built-in function, this specification describes the arguments required by that function and the properties of that function object. For each built-in constructor, this specification furthermore describes properties of the prototype object of that constructor and properties of specific object instances returned by a **`new`** expression that invokes that constructor.

Unless otherwise specified in the description of a particular function, if a built-in function or constructor is given fewer arguments than the function is specified to require, the function or constructor shall behave exactly as if it had been given sufficient additional arguments, each such argument being the **undefined** value. Such missing arguments

are considered to be “not present” and may be identified in that manner by specification algorithms. In the description of a particular function, the terms “**this** value” and “NewTarget” have the meanings given in 9.3.

Unless otherwise specified in the description of a particular function, if a built-in function or constructor described is given more arguments than the function is specified to allow, the extra arguments are evaluated by the call and then ignored by the function. However, an implementation may define implementation specific behaviour relating to such arguments as long as the behaviour is not the throwing of a **TypeError** exception that is predicated simply on the presence of an extra argument.

NOTE 1 Implementations that add additional capabilities to the set of built-in functions are encouraged to do so by adding new functions rather than adding new parameters to existing functions.

Unless otherwise specified every built-in function and every built-in constructor has the Function prototype object, which is the initial value of the expression **`Function.prototype`** (19.2.3), as the value of its [[Prototype]] internal slot.

Unless otherwise specified every built-in prototype object has the Object prototype object, which is the initial value of the expression **`Object.prototype`** (19.1.3), as the value of its [[Prototype]] internal slot, except the Object prototype object itself.

Built-in function objects that are not identified as constructors do not implement the [[Construct]] internal method unless otherwise specified in the description of a particular function.

Each built-in function defined in this specification is created by calling the CreateBuiltinFunction abstract operation (9.3.3).

Every built-in function object, including constructors, has a **"length"** property whose value is an integer. Unless otherwise specified, this value is equal to the largest number of named arguments shown in the subclause headings for the function description. Optional parameters (which are indicated with brackets: **`[ ]`**) or rest parameters (which are shown using the form «...name») are not included in the default argument count.

NOTE 2 For example, the function object that is the initial value of the **"map"** property of the Array prototype object is described under the subclause heading «Array.prototype.map (callbackFn [, thisArg])» which shows the two named arguments callbackFn and thisArg, the latter being optional; therefore the value of the **"length"** property of that function object is 1.

Unless otherwise specified, the **"length"** property of a built-in function object has the attributes { [[Writable]]: **false**, [[Enumerable]]: **false**, [[Configurable]]: **true** }.

Every built-in function object, including constructors, that is not identified as an anonymous function has a **"name"** property whose value is a String. Unless otherwise specified, this value is the name that is given to the function in this specification. For functions that are specified as properties of objects, the name value is the property name string used to access the function. Functions that are specified as get or set accessor functions of built-in properties have **"get "** or **"set "** prepended to the property name string. The value of the **"name"** property is explicitly specified for each built-in functions whose property key is a Symbol value.

Unless otherwise specified, the **"name"** property of a built-in function object, if it exists, has the attributes { [[Writable]]: **false**, [[Enumerable]]: **false**, [[Configurable]]: **true** }.

Every other data property described in clauses 18 through 26 and in Annex B.2 has the attributes { [[Writable]]: **true**, [[Enumerable]]: **false**, [[Configurable]]: **true** } unless otherwise specified.

Every accessor property described in clauses 18 through 26 and in Annex B.2 has the attributes { [[Enumerable]]: **false**, [[Configurable]]: **true** } unless otherwise specified. If only a get accessor function is described, the set accessor function is the default value, **undefined**. If only a set accessor is described the get accessor is the default value, **undefined**.

18 The Global Object

The *global object*:

- is created before control enters any execution context.
- does not have a [[Construct]] internal method; it cannot be used as a constructor with the **`new`** operator.
- does not have a [[Call]] internal method; it cannot be invoked as a function.
- has a [[Prototype]] internal slot whose value is implementation-dependent.
- may have host defined properties in addition to the properties defined in this specification. This may include a property whose value is the global object itself.

18.1 Value Properties of the Global Object

18.1.1 globalThis

The initial value of the **"globalThis"** property of the global object in a Realm Record *realm* is *realm*.[[GlobalEnv]]'s EnvironmentRecord's [[GlobalThisValue]].

This property has the attributes { [[Writable]]: **true**, [[Enumerable]]: **false**, [[Configurable]]: **true** }.

18.1.2 Infinity

The value of **`Infinity`** is +∞ (see 6.1.6.1). This property has the attributes { [[Writable]]: **false**, [[Enumerable]]: **false**, [[Configurable]]: **false** }.

18.1.3 NaN

The value of **`NaN`** is **NaN** (see 6.1.6.1). This property has the attributes { [[Writable]]: **false**, [[Enumerable]]: **false**, [[Configurable]]: **false** }.

18.1.4 undefined

The value of **`undefined`** is **undefined** (see 6.1.1). This property has the attributes { [[Writable]]: **false**, [[Enumerable]]: **false**, [[Configurable]]: **false** }.

18.2 Function Properties of the Global Object

18.2.1 eval (*x*)

The **`eval`** function is the *%eval%* intrinsic object. When the **`eval`** function is called with one argument *x*, the following steps are taken:

1. Assert: The execution context stack has at least two elements.
2. Let *callerContext* be the second to top element of the execution context stack.
3. Let *callerRealm* be *callerContext*'s Realm.
4. Return ? PerformEval(*x*, *callerRealm*, **false**, **false**).

18.2.1.1 Runtime Semantics: PerformEval (*x*, *callerRealm*, *strictCaller*, *direct*)

The abstract operation PerformEval with arguments *x*, *callerRealm*, *strictCaller*, and *direct* performs the following steps:

1. Assert: If *direct* is **false**, then *strictCaller* is also **false**.
2. If Type(*x*) is not String, return *x*.
3. Let *evalRealm* be the current Realm Record.
4. Perform ? HostEnsureCanCompileStrings(*callerRealm*, *evalRealm*).
5. Let *thisEnvRec* be ! GetThisEnvironment().
6. If *thisEnvRec* is a function Environment Record, then
   a. Let *F* be *thisEnvRec*.[[FunctionObject]].
   b. Let *inFunction* be **true**.
   c. Let *inMethod* be *thisEnvRec*.HasSuperBinding().
   d. If *F*.[[ConstructorKind]] is derived, let *inDerivedConstructor* be **true**; otherwise, let *inDerivedConstructor* be **false**.
7. Else,
   a. Let *inFunction* be **false**.
   b. Let *inMethod* be **false**.
   c. Let *inDerivedConstructor* be **false**.
8. Perform the following substeps in an implementation-dependent order, possibly interleaving parsing and error detection:
   a. Let *script* be the ECMAScript code that is the result of parsing ! UTF16DecodeString(*x*), for the goal symbol *Script*. If the parse fails, throw a **SyntaxError** exception. If any early errors are detected, throw a **SyntaxError** exception (but see also clause 16).
   b. If *script* Contains *ScriptBody* is **false**, return **undefined**.
   c. Let *body* be the *ScriptBody* of *script*.
   d. If *inFunction* is **false**, and *body* Contains *NewTarget*, throw a **SyntaxError** exception.
   e. If *inMethod* is **false**, and *body* Contains *SuperProperty*, throw a **SyntaxError** exception.
   f. If *inDerivedConstructor* is **false**, and *body* Contains *SuperCall*, throw a **SyntaxError** exception.
9. If *strictCaller* is **true**, let *strictEval* be **true**.
10. Else, let *strictEval* be IsStrict of *script*.
11. Let *runningContext* be the running execution context.
12. NOTE: If *direct* is **true**, *runningContext* will be the execution context that performed the direct eval. If *direct* is **false**, *runningContext* will be the execution context for the invocation of the **`eval`** function.
13. If *direct* is **true**, then
    a. Let *lexEnv* be NewDeclarativeEnvironment(*runningContext*'s LexicalEnvironment).
    b. Let *varEnv* be *runningContext*'s VariableEnvironment.
14. Else,
    a. Let *lexEnv* be NewDeclarativeEnvironment(*evalRealm*.[[GlobalEnv]]).

    b. Let *varEnv* be *evalRealm*.[[GlobalEnv]].
15. If *strictEval* is **true**, set *varEnv* to *lexEnv*.
16. If *runningContext* is not already suspended, suspend *runningContext*.
17. Let *evalContext* be a new ECMAScript code execution context.
18. Set *evalContext*'s Function to **null**.
19. Set *evalContext*'s Realm to *evalRealm*.
20. Set *evalContext*'s ScriptOrModule to *runningContext*'s ScriptOrModule.
21. Set *evalContext*'s VariableEnvironment to *varEnv*.
22. Set *evalContext*'s LexicalEnvironment to *lexEnv*.
23. Push *evalContext* onto the execution context stack; *evalContext* is now the running execution context.
24. Let *result* be EvalDeclarationInstantiation(*body*, *varEnv*, *lexEnv*, *strictEval*).
25. If *result*.[[Type]] is normal, then
    a. Set *result* to the result of evaluating *body*.
26. If *result*.[[Type]] is normal and *result*.[[Value]] is empty, then
    a. Set *result* to NormalCompletion(**undefined**).
27. Suspend *evalContext* and remove it from the execution context stack.
28. Resume the context that is now on the top of the execution context stack as the running execution context.
29. Return Completion(*result*).

NOTE The eval code cannot instantiate variable or function bindings in the variable environment of the calling context that invoked the eval if the calling context is evaluating formal parameter initializers or if either the code of the calling context or the eval code is strict mode code. Instead such bindings are instantiated in a new VariableEnvironment that is only accessible to the eval code. Bindings introduced by `let`, `const`, or `class` declarations are always instantiated in a new LexicalEnvironment.

18.2.1.2 HostEnsureCanCompileStrings (*callerRealm*, *calleeRealm*)

HostEnsureCanCompileStrings is an implementation-defined abstract operation that allows host environments to block certain ECMAScript functions which allow developers to compile strings into ECMAScript code.

An implementation of HostEnsureCanCompileStrings may complete normally or abruptly. Any abrupt completions will be propagated to its callers. The default implementation of HostEnsureCanCompileStrings is to unconditionally return an empty normal completion.

18.2.1.3 Runtime Semantics: EvalDeclarationInstantiation (*body*, *varEnv*, *lexEnv*, *strict*)

When the abstract operation EvalDeclarationInstantiation is called with arguments *body*, *varEnv*, *lexEnv*, and *strict*, the following steps are taken:

1. Let *varNames* be the VarDeclaredNames of *body*.
2. Let *varDeclarations* be the VarScopedDeclarations of *body*.
3. Let *lexEnvRec* be *lexEnv*'s EnvironmentRecord.
4. Let *varEnvRec* be *varEnv*'s EnvironmentRecord.
5. If *strict* is **false**, then
    a. If *varEnvRec* is a global Environment Record, then
        i. For each *name* in *varNames*, do
            1. If *varEnvRec*.HasLexicalDeclaration(*name*) is **true**, throw a **SyntaxError** exception.

2. NOTE: `eval` will not create a global var declaration that would be shadowed by a global lexical declaration.

b. Let *thisLex* be *lexEnv*.
c. Assert: The following loop will terminate.
d. Repeat, while *thisLex* is not the same as *varEnv*,
i. Let *thisEnvRec* be *thisLex*'s EnvironmentRecord.
ii. If *thisEnvRec* is not an object Environment Record, then
1. NOTE: The environment of with statements cannot contain any lexical declaration so it doesn't need to be checked for var/let hoisting conflicts.
2. For each *name* in *varNames*, do
a. If *thisEnvRec*.HasBinding(*name*) is **true**, then
i. Throw a **SyntaxError** exception.
ii. NOTE: Annex B.3.5 defines alternate semantics for the above step.
b. NOTE: A direct eval will not hoist var declaration over a like-named lexical declaration.
iii. Set *thisLex* to *thisLex*'s outer environment reference.

6. Let *functionsToInitialize* be a new empty List.
7. Let *declaredFunctionNames* be a new empty List.
8. For each *d* in *varDeclarations*, in reverse list order, do
a. If *d* is neither a *VariableDeclaration* nor a *ForBinding* nor a *BindingIdentifier*, then
i. Assert: *d* is either a *FunctionDeclaration*, a *GeneratorDeclaration*, an *AsyncFunctionDeclaration*, or an *AsyncGeneratorDeclaration*.
ii. NOTE: If there are multiple function declarations for the same name, the last declaration is used.
iii. Let *fn* be the sole element of the BoundNames of *d*.
iv. If *fn* is not an element of *declaredFunctionNames*, then
1. If *varEnvRec* is a global Environment Record, then
a. Let *fnDefinable* be ? *varEnvRec*.CanDeclareGlobalFunction(*fn*).
b. If *fnDefinable* is **false**, throw a **TypeError** exception.
2. Append *fn* to *declaredFunctionNames*.
3. Insert *d* as the first element of *functionsToInitialize*.
9. NOTE: Annex B.3.3.3 adds additional steps at this point.
10. Let *declaredVarNames* be a new empty List.
11. For each *d* in *varDeclarations*, do
a. If *d* is a *VariableDeclaration*, a *ForBinding*, or a *BindingIdentifier*, then
i. For each String *vn* in the BoundNames of *d*, do
1. If *vn* is not an element of *declaredFunctionNames*, then
a. If *varEnvRec* is a global Environment Record, then
i. Let *vnDefinable* be ? *varEnvRec*.CanDeclareGlobalVar(*vn*).
ii. If *vnDefinable* is **false**, throw a **TypeError** exception.
b. If *vn* is not an element of *declaredVarNames*, then
i. Append *vn* to *declaredVarNames*.
12. NOTE: No abnormal terminations occur after this algorithm step unless *varEnvRec* is a global Environment Record and the global object is a Proxy exotic object.
13. Let *lexDeclarations* be the LexicallyScopedDeclarations of *body*.
14. For each element *d* in *lexDeclarations*, do
a. NOTE: Lexically declared names are only instantiated here but not initialized.
b. For each element *dn* of the BoundNames of *d*, do
i. If IsConstantDeclaration of *d* is **true**, then

        1. Perform ? *lexEnvRec*.CreateImmutableBinding(*dn*, **true**).
    ii. Else,
        1. Perform ? *lexEnvRec*.CreateMutableBinding(*dn*, **false**).
15. For each Parse Node *f* in *functionsToInitialize*, do
    a. Let *fn* be the sole element of the BoundNames of *f*.
    b. Let *fo* be InstantiateFunctionObject of *f* with argument *lexEnv*.
    c. If *varEnvRec* is a global Environment Record, then
        i. Perform ? *varEnvRec*.CreateGlobalFunctionBinding(*fn*, *fo*, **true**).
    d. Else,
        i. Let *bindingExists* be *varEnvRec*.HasBinding(*fn*).
        ii. If *bindingExists* is **false**, then
            1. Let *status* be ! *varEnvRec*.CreateMutableBinding(*fn*, **true**).
            2. Assert: *status* is not an abrupt completion because of validation preceding step 12.
            3. Perform ! *varEnvRec*.InitializeBinding(*fn*, *fo*).
        iii. Else,
            1. Perform ! *varEnvRec*.SetMutableBinding(*fn*, *fo*, **false**).
16. For each String *vn* in *declaredVarNames*, in list order, do
    a. If *varEnvRec* is a global Environment Record, then
        i. Perform ? *varEnvRec*.CreateGlobalVarBinding(*vn*, **true**).
    b. Else,
        i. Let *bindingExists* be *varEnvRec*.HasBinding(*vn*).
        ii. If *bindingExists* is **false**, then
            1. Let *status* be ! *varEnvRec*.CreateMutableBinding(*vn*, **true**).
            2. Assert: *status* is not an abrupt completion because of validation preceding step 12.
            3. Perform ! *varEnvRec*.InitializeBinding(*vn*, **undefined**).
17. Return NormalCompletion(empty).

NOTE An alternative version of this algorithm is described in B.3.5.

18.2.2 isFinite (*number*)

The **`isFinite`** function is the *%isFinite%* intrinsic object. When the **`isFinite`** function is called with one argument *number*, the following steps are taken:

1. Let *num* be ? ToNumber(*number*).
2. If *num* is **NaN**, +∞, or -∞, return **false**.
3. Otherwise, return **true**.

18.2.3 isNaN (*number*)

The **`isNaN`** function is the *%isNaN%* intrinsic object. When the **`isNaN`** function is called with one argument *number*, the following steps are taken:

1. Let *num* be ? ToNumber(*number*).
2. If *num* is **NaN**, return **true**.
3. Otherwise, return **false**.

NOTE A reliable way for ECMAScript code to test if a value **X** is a **NaN** is an expression of the form **X !== X**. The result will be **true** if and only if **X** is a **NaN**.

18.2.4 parseFloat (*string*)

The **parseFloat** function produces a Number value dictated by interpretation of the contents of the *string* argument as a decimal literal.

The **parseFloat** function is the *%parseFloat%* intrinsic object. When the **parseFloat** function is called with one argument *string*, the following steps are taken:

1. Let *inputString* be ? ToString(*string*).
2. Let *trimmedString* be ! TrimString(*inputString*, start).
3. If neither *trimmedString* nor any prefix of *trimmedString* satisfies the syntax of a *StrDecimalLiteral* (see 7.1.4.1), return **NaN**.
4. Let *numberString* be the longest prefix of *trimmedString*, which might be *trimmedString* itself, that satisfies the syntax of a *StrDecimalLiteral*.
5. Let *mathFloat* be MV of *numberString*.
6. If *mathFloat* = $0_{\mathbb{R}}$, then
   a. If the first code unit of *trimmedString* is the code unit 0x002D (HYPHEN-MINUS), return **-0**.
   b. Return **+0**.
7. Return the Number value for *mathFloat*.

NOTE **parseFloat** may interpret only a leading portion of *string* as a Number value; it ignores any code units that cannot be interpreted as part of the notation of a decimal literal, and no indication is given that any such code units were ignored.

18.2.5 parseInt (*string*, *radix*)

The **parseInt** function produces an integer value dictated by interpretation of the contents of the *string* argument according to the specified *radix*. Leading white space in *string* is ignored. If *radix* is **undefined** or 0, it is assumed to be 10 except when the number begins with the code unit pairs **0x** or **0X**, in which case a radix of 16 is assumed. If *radix* is 16, the number may also optionally begin with the code unit pairs **0x** or **0X**.

The **parseInt** function is the *%parseInt%* intrinsic object. When the **parseInt** function is called, the following steps are taken:

1. Let *inputString* be ? ToString(*string*).
2. Let *S* be ! TrimString(*inputString*, start).
3. Let *sign* be 1.
4. If *S* is not empty and the first code unit of *S* is the code unit 0x002D (HYPHEN-MINUS), set *sign* to -1.
5. If *S* is not empty and the first code unit of *S* is the code unit 0x002B (PLUS SIGN) or the code unit 0x002D (HYPHEN-MINUS), remove the first code unit from *S*.
6. Let *R* be ? ToInt32(*radix*).
7. Let *stripPrefix* be **true**.
8. If $R \neq 0$, then

a. If $R < 2$ or $R > 36$, return **NaN**.
b. If $R \neq 16$, set *stripPrefix* to **false**.

9. Else,
   a. Set R to 10.
10. If *stripPrefix* is **true**, then
   a. If the length of S is at least 2 and the first two code units of S are either **"0x"** or **"0X"**, then
      i. Remove the first two code units from S.
      ii. Set R to 16.
11. If S contains a code unit that is not a radix-R digit, let Z be the substring of S consisting of all code units before the first such code unit; otherwise, let Z be S.
12. If Z is empty, return **NaN**.
13. Let *mathInt* be the mathematical integer value that is represented by Z in radix-R notation, using the letters **A**-**Z** and **a**-**z** for digits with values 10 through 35. (However, if R is 10 and Z contains more than 20 significant digits, every significant digit after the 20th may be replaced by a 0 digit, at the option of the implementation; and if R is not 2, 4, 8, 10, 16, or 32, then *mathInt* may be an implementation-dependent approximation to the mathematical integer value that is represented by Z in radix-R notation.)
14. If $mathInt = 0_{\mathbb{R}}$, then
   a. If $sign = -1$, return **-0**.
   b. Return **+0**.
15. Let *number* be the Number value for *mathInt*.
16. Return $sign \times number$.

NOTE `parseInt` may interpret only a leading portion of *string* as an integer value; it ignores any code units that cannot be interpreted as part of the notation of an integer, and no indication is given that any such code units were ignored.

18.2.6 URI Handling Functions

Uniform Resource Identifiers, or URIs, are Strings that identify resources (e.g. web pages or files) and transport protocols by which to access them (e.g. HTTP or FTP) on the Internet. The ECMAScript language itself does not provide any support for using URIs except for functions that encode and decode URIs as described in 18.2.6.2, 18.2.6.3, 18.2.6.4 and 18.2.6.5

NOTE Many implementations of ECMAScript provide additional functions and methods that manipulate web pages; these functions are beyond the scope of this standard.

18.2.6.1 URI Syntax and Semantics

A URI is composed of a sequence of components separated by component separators. The general form is:

Scheme **:** *First* **/** *Second* **;** *Third* **?** *Fourth*

where the italicized names represent components and "**:**", "**/**", "**;**" and "**?**" are reserved for use as separators. The `encodeURI` and `decodeURI` functions are intended to work with complete URIs; they assume that any reserved code units in the URI are intended to have special meaning and so are not encoded. The `encodeURIComponent` and `decodeURIComponent` functions are intended to work with the individual component parts of a URI; they

assume that any reserved code units represent text and so must be encoded so that they are not interpreted as reserved code units when the component is part of a complete URI.

The following lexical grammar specifies the form of encoded URIs.

Syntax

uri **:::**
  uriCharacters$_{opt}$

uriCharacters **:::**
  uriCharacter *uriCharacters*$_{opt}$

uriCharacter **:::**
  uriReserved
  uriUnescaped
  uriEscaped

uriReserved **::: one of**
  `; / ? : @ & = + $ ,`

uriUnescaped **:::**
  uriAlpha
  DecimalDigit
  uriMark

uriEscaped **:::**
  `%` *HexDigit* *HexDigit*

uriAlpha **::: one of**
  `a b c d e f g h i j k l m n o p q r s t u v w x y z A B C D E F G H I J K L M N O P Q R S T U V W X Y Z`

uriMark **::: one of**
  `- _ . ! ~ * ' ( )`

NOTE The above syntax is based upon RFC 2396 and does not reflect changes introduced by the more recent RFC 3986.

Runtime Semantics

When a code unit to be included in a URI is not listed above or is not intended to have the special meaning sometimes given to the reserved code units, that code unit must be encoded. The code unit is transformed into its UTF-8 encoding, with surrogate pairs first converted from UTF-16 to the corresponding code point value. (Note that for code units in the range [0, 127] this results in a single octet with the same value.) The resulting sequence of octets is then transformed into a String with each octet represented by an escape sequence of the form "%**xx**".

18.2.6.1.1 Runtime Semantics: Encode (*string*, *unescapedSet*)

The encoding and escaping process is described by the abstract operation Encode taking two String arguments *string* and *unescapedSet*.

1. Let *strLen* be the number of code units in *string*.
2. Let *R* be the empty String.
3. Let *k* be 0.
4. Repeat,
    a. If *k* equals *strLen*, return *R*.
    b. Let *C* be the code unit at index *k* within *string*.
    c. If *C* is in *unescapedSet*, then
        i. Set *k* to *k* + 1.
        ii. Set *R* to the string-concatenation of the previous value of *R* and *C*.
    d. Else,
        i. Let *cp* be ! CodePointAt(*string*, *k*).
        ii. If *cp*.[[IsUnpairedSurrogate]] is **true**, throw a **URIError** exception.
        iii. Set *k* to *k* + *cp*.[[CodeUnitCount]].
        iv. Let *Octets* be the List of octets resulting by applying the UTF-8 transformation to *cp*.[[CodePoint]].
        v. For each element *octet* of *Octets* in List order, do
            1. Set *R* to the string-concatenation of:
                - the previous value of *R*
                - "%"
                - the String representation of *octet*, formatted as a two-digit uppercase hexadecimal number, padded to the left with a zero if necessary

18.2.6.1.2 Runtime Semantics: Decode (*string*, *reservedSet*)

The unescaping and decoding process is described by the abstract operation Decode taking two String arguments *string* and *reservedSet*.

1. Let *strLen* be the number of code units in *string*.
2. Let *R* be the empty String.
3. Let *k* be 0.
4. Repeat,
    a. If *k* equals *strLen*, return *R*.
    b. Let *C* be the code unit at index *k* within *string*.
    c. If *C* is not the code unit 0x0025 (PERCENT SIGN), then
        i. Let *S* be the String value containing only the code unit *C*.
    d. Else,
        i. Let *start* be *k*.
        ii. If *k* + 2 is greater than or equal to *strLen*, throw a **URIError** exception.
        iii. If the code units at index (*k* + 1) and (*k* + 2) within *string* do not represent hexadecimal digits, throw a **URIError** exception.
        iv. Let *B* be the 8-bit value represented by the two hexadecimal digits at index (*k* + 1) and (*k* + 2).
        v. Set *k* to *k* + 2.
        vi. If the most significant bit in *B* is 0, then
            1. Let *C* be the code unit whose value is *B*.
            2. If *C* is not in *reservedSet*, then
                a. Let *S* be the String value containing only the code unit *C*.
            3. Else,
                a. Let *S* be the substring of *string* from index *start* to index *k* inclusive.

vii. Else,

1. Assert: the most significant bit in *B* is 1.
2. Let *n* be the smallest nonnegative integer such that (*B* << *n*) & 0x80 is equal to 0.
3. If *n* equals 1 or *n* is greater than 4, throw a **URIError** exception.
4. Let *Octets* be a List of 8-bit integers of size *n*.
5. Set *Octets*[0] to *B*.
6. If *k* + (3 × (*n* - 1)) is greater than or equal to *strLen*, throw a **URIError** exception.
7. Let *j* be 1.
8. Repeat, while *j* < *n*
    a. Set *k* to *k* + 1.
    b. If the code unit at index *k* within *string* is not the code unit 0x0025 (PERCENT SIGN), throw a **URIError** exception.
    c. If the code units at index (*k* + 1) and (*k* + 2) within *string* do not represent hexadecimal digits, throw a **URIError** exception.
    d. Let *B* be the 8-bit value represented by the two hexadecimal digits at index (*k* + 1) and (*k* + 2).
    e. If the two most significant bits in *B* are not 10, throw a **URIError** exception.
    f. Set *k* to *k* + 2.
    g. Set *Octets*[*j*] to *B*.
    h. Set *j* to *j* + 1.
9. If *Octets* does not contain a valid UTF-8 encoding of a Unicode code point, throw a **URIError** exception.
10. Let *V* be the value obtained by applying the UTF-8 transformation to *Octets*, that is, from a List of octets into a 21-bit value.
11. Let *S* be the String value whose code units are, in order, the elements in UTF16Encoding(*V*).

e. Set *R* to the string-concatenation of the previous value of *R* and *S*.
f. Set *k* to *k* + 1.

NOTE This syntax of Uniform Resource Identifiers is based upon RFC 2396 and does not reflect the more recen 3986 which replaces RFC 2396. A formal description and implementation of UTF-8 is given in RFC 3629

In UTF-8, characters are encoded using sequences of 1 to 6 octets. The only octet of a sequence of one h higher-order bit set to 0, the remaining 7 bits being used to encode the character value. In a sequence of octets, n > 1, the initial octet has the n higher-order bits set to 1, followed by a bit set to 0. The remainin of that octet contain bits from the value of the character to be encoded. The following octets all have the higher-order bit set to 1 and the following bit set to 0, leaving 6 bits in each to contain bits from the cha to be encoded. The possible UTF-8 encodings of ECMAScript characters are specified in Table 47.

Table 47 (Informative): UTF-8 Encodings

Code Unit Value	Representation	1st Octet	2nd Octet	3rd Octet	4th O
0x0000 – 0x007F	**00000000 0*zzzzzzz***	**0*zzzzzzz***			
0x0080 – 0x07FF	**00000*yyy yyzzzzzz***	**110*yyyyy***	**10*zzzzzz***		
0x0800 – 0xD7FF	***xxxxyyyy yyzzzzzz***	**1110*xxxx***	**10*yyyyyy***	**10*zzzzzz***	
0xD800 – 0xDBFF followed by **0xDC00 – 0xDFFF**	**110110*vv vvwwwwxx*** followed by **110111*yy yyzzzzzz***	**11110*uuu***	**10*uuwwww***	**10*xxyyyy***	**10*zz***
0xD800 – 0xDBFF not followed by **0xDC00 – 0xDFFF**	causes **URIError**				
0xDC00 – 0xDFFF	causes **URIError**				
0xE000 – 0xFFFF	***xxxxyyyy yyzzzzzz***	**1110*xxxx***	**10*yyyyyy***	**10*zzzzzz***	

Where
uuuuu = *vvvv* + 1
to account for the addition of 0x10000 as in section 3.8 of the Unicode Standard (Surrogates).

The above transformation combines each surrogate pair (for which code unit values in the inclusive rar 0xD800 to 0xDFFF are reserved) into a UTF-32 representation and encodes the resulting 21-bit value int 8. Decoding reconstructs the surrogate pair.

RFC 3629 prohibits the decoding of invalid UTF-8 octet sequences. For example, the invalid sequence C must not decode into the code unit 0x0000. Implementations of the Decode algorithm are required to th **URIError** when encountering such invalid sequences.

18.2.6.2 decodeURI (*encodedURI*)

The **decodeURI** function computes a new version of a URI in which each escape sequence and UTF-8 encoding of the sort that might be introduced by the **encodeURI** function is replaced with the UTF-16 encoding of the code points that it represents. Escape sequences that could not have been introduced by **encodeURI** are not replaced.

The **decodeURI** function is the *%decodeURI%* intrinsic object. When the **decodeURI** function is called with one argument *encodedURI*, the following steps are taken:

1. Let *uriString* be ? ToString(*encodedURI*).
2. Let *reservedURISet* be a String containing one instance of each code unit valid in *uriReserved* plus "#".
3. Return ? Decode(*uriString*, *reservedURISet*).

NOTE The code point **#** is not decoded from escape sequences even though it is not a reserved URI code point.

18.2.6.3 decodeURIComponent (*encodedURIComponent*)

The **`decodeURIComponent`** function computes a new version of a URI in which each escape sequence and UTF-8 encoding of the sort that might be introduced by the **`encodeURIComponent`** function is replaced with the UTF-16 encoding of the code points that it represents.

The **`decodeURIComponent`** function is the *%decodeURIComponent%* intrinsic object. When the **`decodeURIComponent`** function is called with one argument *encodedURIComponent*, the following steps are taken:

1. Let *componentString* be ? ToString(*encodedURIComponent*).
2. Let *reservedURIComponentSet* be the empty String.
3. Return ? Decode(*componentString*, *reservedURIComponentSet*).

18.2.6.4 encodeURI (*uri*)

The **`encodeURI`** function computes a new version of a UTF-16 encoded (6.1.4) URI in which each instance of certain code points is replaced by one, two, three, or four escape sequences representing the UTF-8 encoding of the code points.

The **`encodeURI`** function is the *%encodeURI%* intrinsic object. When the **`encodeURI`** function is called with one argument *uri*, the following steps are taken:

1. Let *uriString* be ? ToString(*uri*).
2. Let *unescapedURISet* be a String containing one instance of each code unit valid in *uriReserved* and *uriUnescaped* plus "#".
3. Return ? Encode(*uriString*, *unescapedURISet*).

NOTE The code point **#** is not encoded to an escape sequence even though it is not a reserved or unescaped URI code point.

18.2.6.5 encodeURIComponent (*uriComponent*)

The **`encodeURIComponent`** function computes a new version of a UTF-16 encoded (6.1.4) URI in which each instance of certain code points is replaced by one, two, three, or four escape sequences representing the UTF-8 encoding of the code point.

The **`encodeURIComponent`** function is the *%encodeURIComponent%* intrinsic object. When the **`encodeURIComponent`** function is called with one argument *uriComponent*, the following steps are taken:

1. Let *componentString* be ? ToString(*uriComponent*).
2. Let *unescapedURIComponentSet* be a String containing one instance of each code unit valid in *uriUnescaped*.
3. Return ? Encode(*componentString*, *unescapedURIComponentSet*).

18.3 Constructor Properties of the Global Object

18.3.1 Array (. . .)

See 22.1.1.

18.3.2 ArrayBuffer (. . .)

See 24.1.2.

18.3.3 BigInt (. . .)

See 20.2.1.

18.3.4 BigInt64Array (. . .)

See 22.2.4.

18.3.5 BigUint64Array (. . .)

See 22.2.4.

18.3.6 Boolean (. . .)

See 19.3.1.

18.3.7 DataView (. . .)

See 24.3.2.

18.3.8 Date (. . .)

See 20.4.2.

18.3.9 Error (. . .)

See 19.5.1.

18.3.10 EvalError (. . .)

See 19.5.5.1.

18.3.11 Float32Array (. . .)

See 22.2.4.

18.3.12 Float64Array (. . .)

See 22.2.4.

18.3.13 Function (. . .)

See 19.2.1.

18.3.14 Int8Array (. . .)

See 22.2.4.

18.3.15 Int16Array (. . .)

See 22.2.4.

18.3.16 Int32Array (. . .)

See 22.2.4.

18.3.17 Map (. . .)

See 23.1.1.

18.3.18 Number (. . .)

See 20.1.1.

18.3.19 Object (. . .)

See 19.1.1.

18.3.20 Promise (. . .)

See 25.6.3.

18.3.21 Proxy (. . .)

See 26.2.1.

18.3.22 RangeError (. . .)

See 19.5.5.2.

18.3.23 ReferenceError (. . .)

See 19.5.5.3.

18.3.24 RegExp (. . .)

See 21.2.3.

18.3.25 Set (. . .)

See 23.2.1.

18.3.26 SharedArrayBuffer (. . .)

See 24.2.2.

18.3.27 String (. . .)

See 21.1.1.

18.3.28 Symbol (. . .)

See 19.4.1.

18.3.29 SyntaxError (. . .)

See 19.5.5.4.

18.3.30 TypeError (. . .)

See 19.5.5.5.

18.3.31 Uint8Array (. . .)

See 22.2.4.

18.3.32 Uint8ClampedArray (. . .)

See 22.2.4.

18.3.33 Uint16Array (. . .)

See 22.2.4.

18.3.34 Uint32Array (. . .)

See 22.2.4.

18.3.35 URIError (. . .)

See 19.5.5.6.

18.3.36 WeakMap (. . .)

See 23.3.1.

18.3.37 WeakSet (. . .)

See 23.4.

18.4 Other Properties of the Global Object

18.4.1 Atomics

See 24.4.

18.4.2 JSON

See 24.5.

18.4.3 Math

See 20.3.

18.4.4 Reflect

See 26.1.

19 Fundamental Objects

19.1 Object Objects

19.1.1 The Object Constructor

The Object constructor:

- is the intrinsic object *%Object%*.
- is the initial value of the **"Object"** property of the global object.
- creates a new ordinary object when called as a constructor.
- performs a type conversion when called as a function rather than as a constructor.
- is designed to be subclassable. It may be used as the value of an `extends` clause of a class definition.

19.1.1.1 Object ([*value*])

When the `Object` function is called with optional argument *value*, the following steps are taken:

1. If NewTarget is neither **undefined** nor the active function, then

    a. Return ? OrdinaryCreateFromConstructor(NewTarget, "%**Object.prototype**%").
2. If *value* is **undefined** or **null**, return OrdinaryObjectCreate(%Object.prototype%).
3. Return ! ToObject(*value*).

The **"length"** property of the **`Object`** constructor function is 1.

19.1.2 Properties of the Object Constructor

The Object constructor:

- has a [[Prototype]] internal slot whose value is %Function.prototype%.
- has a **"length"** property.
- has the following additional properties:

19.1.2.1 Object.assign (*target*, ...*sources*)

The **`assign`** function is used to copy the values of all of the enumerable own properties from one or more source objects to a *target* object. When the **`assign`** function is called, the following steps are taken:

1. Let *to* be ? ToObject(*target*).
2. If only one argument was passed, return *to*.
3. Let *sources* be the List of argument values starting with the second argument.
4. For each element *nextSource* of *sources*, in ascending index order, do
    a. If *nextSource* is neither **undefined** nor **null**, then
        i. Let *from* be ! ToObject(*nextSource*).
        ii. Let *keys* be ? *from*.[[OwnPropertyKeys]]().
        iii. For each element *nextKey* of *keys* in List order, do
            1. Let *desc* be ? *from*.[[GetOwnProperty]](*nextKey*).
            2. If *desc* is not **undefined** and *desc*.[[Enumerable]] is **true**, then
                a. Let *propValue* be ? Get(*from*, *nextKey*).
                b. Perform ? Set(*to*, *nextKey*, *propValue*, **true**).
5. Return *to*.

The **"length"** property of the **`assign`** function is 2.

19.1.2.2 Object.create (*O*, *Properties*)

The **`create`** function creates a new object with a specified prototype. When the **`create`** function is called, the following steps are taken:

1. If Type(*O*) is neither Object nor Null, throw a **TypeError** exception.
2. Let *obj* be OrdinaryObjectCreate(*O*).
3. If *Properties* is not **undefined**, then
    a. Return ? ObjectDefineProperties(*obj*, *Properties*).
4. Return *obj*.

19.1.2.3 Object.defineProperties (*O*, *Properties*)

The **`defineProperties`** function is used to add own properties and/or update the attributes of existing own

properties of an object. When the **`defineProperties`** function is called, the following steps are taken:

1. Return ? ObjectDefineProperties(*O*, *Properties*).

19.1.2.3.1 Runtime Semantics: ObjectDefineProperties (*O*, *Properties*)

The abstract operation ObjectDefineProperties with arguments *O* and *Properties* performs the following steps:

1. If Type(*O*) is not Object, throw a **TypeError** exception.
2. Let *props* be ? ToObject(*Properties*).
3. Let *keys* be ? *props*.[[OwnPropertyKeys]]().
4. Let *descriptors* be a new empty List.
5. For each element *nextKey* of *keys* in List order, do
    a. Let *propDesc* be ? *props*.[[GetOwnProperty]](*nextKey*).
    b. If *propDesc* is not **undefined** and *propDesc*.[[Enumerable]] is **true**, then
        i. Let *descObj* be ? Get(*props*, *nextKey*).
        ii. Let *desc* be ? ToPropertyDescriptor(*descObj*).
        iii. Append the pair (a two element List) consisting of *nextKey* and *desc* to the end of *descriptors*.
6. For each *pair* from *descriptors* in list order, do
    a. Let *P* be the first element of *pair*.
    b. Let *desc* be the second element of *pair*.
    c. Perform ? DefinePropertyOrThrow(*O*, *P*, *desc*).
7. Return *O*.

19.1.2.4 Object.defineProperty (*O*, *P*, *Attributes*)

The **`defineProperty`** function is used to add an own property and/or update the attributes of an existing own property of an object. When the **`defineProperty`** function is called, the following steps are taken:

1. If Type(*O*) is not Object, throw a **TypeError** exception.
2. Let *key* be ? ToPropertyKey(*P*).
3. Let *desc* be ? ToPropertyDescriptor(*Attributes*).
4. Perform ? DefinePropertyOrThrow(*O*, *key*, *desc*).
5. Return *O*.

19.1.2.5 Object.entries (*O*)

When the **`entries`** function is called with argument *O*, the following steps are taken:

1. Let *obj* be ? ToObject(*O*).
2. Let *nameList* be ? EnumerableOwnPropertyNames(*obj*, key+value).
3. Return CreateArrayFromList(*nameList*).

19.1.2.6 Object.freeze (*O*)

When the **`freeze`** function is called, the following steps are taken:

1. If Type(*O*) is not Object, return *O*.
2. Let *status* be ? SetIntegrityLevel(*O*, frozen).
3. If *status* is **false**, throw a **TypeError** exception.

4. Return *O*.

19.1.2.7 Object.fromEntries (*iterable*)

When the **`fromEntries`** method is called with argument *iterable*, the following steps are taken:

1. Perform ? RequireObjectCoercible(*iterable*).
2. Let *obj* be OrdinaryObjectCreate(%Object.prototype%).
3. Assert: *obj* is an extensible ordinary object with no own properties.
4. Let *stepsDefine* be the algorithm steps defined in CreateDataPropertyOnObject Functions.
5. Let *adder* be ! CreateBuiltinFunction(*stepsDefine*, « »).
6. Return ? AddEntriesFromIterable(*obj*, *iterable*, *adder*).

NOTE The function created for *adder* is never directly accessible to ECMAScript code.

19.1.2.7.1 CreateDataPropertyOnObject Functions

A CreateDataPropertyOnObject function is an anonymous built-in function. When a CreateDataPropertyOnObject function is called with arguments *key* and *value*, the following steps are taken:

1. Let *O* be the **this** value.
2. Assert: Type(*O*) is Object.
3. Assert: *O* is an extensible ordinary object.
4. Let *propertyKey* be ? ToPropertyKey(*key*).
5. Perform ! CreateDataPropertyOrThrow(*O*, *propertyKey*, *value*).
6. Return **undefined**.

19.1.2.8 Object.getOwnPropertyDescriptor (*O*, *P*)

When the **`getOwnPropertyDescriptor`** function is called, the following steps are taken:

1. Let *obj* be ? ToObject(*O*).
2. Let *key* be ? ToPropertyKey(*P*).
3. Let *desc* be ? *obj*.[[GetOwnProperty]](*key*).
4. Return FromPropertyDescriptor(*desc*).

19.1.2.9 Object.getOwnPropertyDescriptors (*O*)

When the **`getOwnPropertyDescriptors`** function is called, the following steps are taken:

1. Let *obj* be ? ToObject(*O*).
2. Let *ownKeys* be ? *obj*.[[OwnPropertyKeys]]().
3. Let *descriptors* be ! OrdinaryObjectCreate(%Object.prototype%).
4. For each element *key* of *ownKeys* in List order, do
    a. Let *desc* be ? *obj*.[[GetOwnProperty]](*key*).
    b. Let *descriptor* be ! FromPropertyDescriptor(*desc*).
    c. If *descriptor* is not **undefined**, perform ! CreateDataPropertyOrThrow(*descriptors*, *key*, *descriptor*).
5. Return *descriptors*.

19.1.2.10 Object.getOwnPropertyNames (*O*)

When the **`getOwnPropertyNames`** function is called, the following steps are taken:

1. Return ? GetOwnPropertyKeys(*O*, string).

19.1.2.11 Object.getOwnPropertySymbols (*O*)

When the **`getOwnPropertySymbols`** function is called with argument *O*, the following steps are taken:

1. Return ? GetOwnPropertyKeys(*O*, symbol).

19.1.2.11.1 Runtime Semantics: GetOwnPropertyKeys (*O*, *type*)

The abstract operation GetOwnPropertyKeys is called with arguments *O* and *type* where *O* is an Object and *type* is one of string or symbol. The following steps are taken:

1. Let *obj* be ? ToObject(*O*).
2. Let *keys* be ? *obj*.[[OwnPropertyKeys]]().
3. Let *nameList* be a new empty List.
4. For each element *nextKey* of *keys* in List order, do
    a. If Type(*nextKey*) is Symbol and *type* is symbol or Type(*nextKey*) is String and *type* is string, then
        i. Append *nextKey* as the last element of *nameList*.
5. Return CreateArrayFromList(*nameList*).

19.1.2.12 Object.getPrototypeOf (*O*)

When the **`getPrototypeOf`** function is called with argument *O*, the following steps are taken:

1. Let *obj* be ? ToObject(*O*).
2. Return ? *obj*.[[GetPrototypeOf]]().

19.1.2.13 Object.is (*value1*, *value2*)

When the **`is`** function is called with arguments *value1* and *value2*, the following steps are taken:

1. Return SameValue(*value1*, *value2*).

19.1.2.14 Object.isExtensible (*O*)

When the **`isExtensible`** function is called with argument *O*, the following steps are taken:

1. If Type(*O*) is not Object, return **false**.
2. Return ? IsExtensible(*O*).

19.1.2.15 Object.isFrozen (*O*)

When the **`isFrozen`** function is called with argument *O*, the following steps are taken:

1. If Type(*O*) is not Object, return **true**.
2. Return ? TestIntegrityLevel(*O*, frozen).

19.1.2.16 Object.isSealed (*O*)

When the **`isSealed`** function is called with argument *O*, the following steps are taken:

1. If Type(*O*) is not Object, return **true**.
2. Return ? TestIntegrityLevel(*O*, sealed).

19.1.2.17 Object.keys (*O*)

When the **`keys`** function is called with argument *O*, the following steps are taken:

1. Let *obj* be ? ToObject(*O*).
2. Let *nameList* be ? EnumerableOwnPropertyNames(*obj*, key).
3. Return CreateArrayFromList(*nameList*).

19.1.2.18 Object.preventExtensions (*O*)

When the **`preventExtensions`** function is called, the following steps are taken:

1. If Type(*O*) is not Object, return *O*.
2. Let *status* be ? *O*.[[PreventExtensions]]().
3. If *status* is **false**, throw a **TypeError** exception.
4. Return *O*.

19.1.2.19 Object.prototype

The initial value of **`Object.prototype`** is %Object.prototype%.

This property has the attributes { [[Writable]]: **false**, [[Enumerable]]: **false**, [[Configurable]]: **false** }.

19.1.2.20 Object.seal (*O*)

When the **`seal`** function is called, the following steps are taken:

1. If Type(*O*) is not Object, return *O*.
2. Let *status* be ? SetIntegrityLevel(*O*, sealed).
3. If *status* is **false**, throw a **TypeError** exception.
4. Return *O*.

19.1.2.21 Object.setPrototypeOf (*O*, *proto*)

When the **`setPrototypeOf`** function is called with arguments *O* and *proto*, the following steps are taken:

1. Set *O* to ? RequireObjectCoercible(*O*).
2. If Type(*proto*) is neither Object nor Null, throw a **TypeError** exception.
3. If Type(*O*) is not Object, return *O*.
4. Let *status* be ? *O*.[[SetPrototypeOf]](*proto*).
5. If *status* is **false**, throw a **TypeError** exception.
6. Return *O*.

19.1.2.22 Object.values (*O*)

When the **`values`** function is called with argument *O*, the following steps are taken:

1. Let *obj* be ? ToObject(*O*).
2. Let *nameList* be ? EnumerableOwnPropertyNames(*obj*, value).
3. Return CreateArrayFromList(*nameList*).

19.1.3 Properties of the Object Prototype Object

The Object prototype object:

- is the intrinsic object *%ObjectPrototype%*.
- has an [[Extensible]] internal slot whose value is **true**.
- has the internal methods defined for ordinary objects, except for the [[SetPrototypeOf]] method, which is as defined in 9.4.7.1. (Thus, it is an immutable prototype exotic object.)
- has a [[Prototype]] internal slot whose value is **null**.

19.1.3.1 Object.prototype.constructor

The initial value of **`Object.prototype.constructor`** is %Object%.

19.1.3.2 Object.prototype.hasOwnProperty (*V*)

When the **`hasOwnProperty`** method is called with argument *V*, the following steps are taken:

1. Let *P* be ? ToPropertyKey(*V*).
2. Let *O* be ? ToObject(**this** value).
3. Return ? HasOwnProperty(*O*, *P*).

NOTE The ordering of steps 1 and 2 is chosen to ensure that any exception that would have been thrown by step 1 in previous editions of this specification will continue to be thrown even if the **this** value is **undefined** or **null**.

19.1.3.3 Object.prototype.isPrototypeOf (*V*)

When the **`isPrototypeOf`** method is called with argument *V*, the following steps are taken:

1. If Type(*V*) is not Object, return **false**.
2. Let *O* be ? ToObject(**this** value).
3. Repeat,
   a. Set *V* to ? *V*.[[GetPrototypeOf]]().
   b. If *V* is **null**, return **false**.
   c. If SameValue(*O*, *V*) is **true**, return **true**.

NOTE The ordering of steps 1 and 2 preserves the behaviour specified by previous editions of this specification for the case where *V* is not an object and the **this** value is **undefined** or **null**.

19.1.3.4 Object.prototype.propertyIsEnumerable (*V*)

When the **`propertyIsEnumerable`** method is called with argument *V*, the following steps are taken:

1. Let *P* be ? ToPropertyKey(*V*).
2. Let *O* be ? ToObject(**this** value).
3. Let *desc* be ? *O*.[[GetOwnProperty]](*P*).
4. If *desc* is **undefined**, return **false**.
5. Return *desc*.[[Enumerable]].

NOTE 1 This method does not consider objects in the prototype chain.

NOTE 2 The ordering of steps 1 and 2 is chosen to ensure that any exception that would have been thrown by step 1 in previous editions of this specification will continue to be thrown even if the **this** value is **undefined** or **null**.

19.1.3.5 Object.prototype.toLocaleString ([*reserved1* [, *reserved2*]])

When the **`toLocaleString`** method is called, the following steps are taken:

1. Let *O* be the **this** value.
2. Return ? Invoke(*O*, **"toString"**).

The optional parameters to this function are not used but are intended to correspond to the parameter pattern used by ECMA-402 **`toLocaleString`** functions. Implementations that do not include ECMA-402 support must not use those parameter positions for other purposes.

NOTE 1 This function provides a generic **`toLocaleString`** implementation for objects that have no locale-specific **`toString`** behaviour. **`Array`**, **`Number`**, **`Date`**, and %TypedArray% provide their own locale-sensitive **`toLocaleString`** methods.

NOTE 2 ECMA-402 intentionally does not provide an alternative to this default implementation.

19.1.3.6 Object.prototype.toString ( )

When the **`toString`** method is called, the following steps are taken:

1. If the **this** value is **undefined**, return **"[object Undefined]"**.
2. If the **this** value is **null**, return **"[object Null]"**.
3. Let *O* be ! ToObject(**this** value).
4. Let *isArray* be ? IsArray(*O*).
5. If *isArray* is **true**, let *builtinTag* be **"Array"**.
6. Else if *O* has a [[ParameterMap]] internal slot, let *builtinTag* be **"Arguments"**.
7. Else if *O* has a [[Call]] internal method, let *builtinTag* be **"Function"**.
8. Else if *O* has an [[ErrorData]] internal slot, let *builtinTag* be **"Error"**.
9. Else if *O* has a [[BooleanData]] internal slot, let *builtinTag* be **"Boolean"**.
10. Else if *O* has a [[NumberData]] internal slot, let *builtinTag* be **"Number"**.

11. Else if *O* has a [[StringData]] internal slot, let *builtinTag* be **"String"**.
12. Else if *O* has a [[DateValue]] internal slot, let *builtinTag* be **"Date"**.
13. Else if *O* has a [[RegExpMatcher]] internal slot, let *builtinTag* be **"RegExp"**.
14. Else, let *builtinTag* be **"Object"**.
15. Let *tag* be ? Get(*O*, @@toStringTag).
16. If Type(*tag*) is not String, set *tag* to *builtinTag*.
17. Return the string-concatenation of **"[object "**, *tag*, and **"]"**.

This function is the *%ObjProto_toString%* intrinsic object.

NOTE Historically, this function was occasionally used to access the String value of the [[Class]] internal slot that was used in previous editions of this specification as a nominal type tag for various built-in objects. The above definition of **`toString`** preserves compatibility for legacy code that uses **`toString`** as a test for those specific kinds of built-in objects. It does not provide a reliable type testing mechanism for other kinds of built-in or program defined objects. In addition, programs can use @@toStringTag in ways that will invalidate the reliability of such legacy type tests.

19.1.3.7 Object.prototype.valueOf ( )

When the **`valueOf`** method is called, the following steps are taken:

1. Return ? ToObject(**this** value).

This function is the *%ObjProto_valueOf%* intrinsic object.

19.1.4 Properties of Object Instances

Object instances have no special properties beyond those inherited from the Object prototype object.

19.2 Function Objects

19.2.1 The Function Constructor

The Function constructor:

- is the intrinsic object *%Function%*.
- is the initial value of the **"Function"** property of the global object.
- creates and initializes a new function object when called as a function rather than as a constructor. Thus the function call **`Function(…)`** is equivalent to the object creation expression **`new Function(…)`** with the same arguments.
- is designed to be subclassable. It may be used as the value of an **`extends`** clause of a class definition. Subclass constructors that intend to inherit the specified **`Function`** behaviour must include a **`super`** call to the **`Function`** constructor to create and initialize a subclass instance with the internal slots necessary for built-in function behaviour. All ECMAScript syntactic forms for defining function objects create instances of **`Function`**. There is no syntactic means to create instances of **`Function`** subclasses except for the built-in

`GeneratorFunction`, **`AsyncFunction`**, and **`AsyncGeneratorFunction`** subclasses.

19.2.1.1 Function (*p1*, *p2*, … , *pn*, *body*)

The last argument specifies the body (executable code) of a function; any preceding arguments specify formal parameters.

When the **`Function`** function is called with some arguments *p1*, *p2*, … , *pn*, *body* (where *n* might be 0, that is, there are no " *p* " arguments, and where *body* might also not be provided), the following steps are taken:

1. Let *C* be the active function object.
2. Let *args* be the *argumentsList* that was passed to this function by [[Call]] or [[Construct]].
3. Return ? CreateDynamicFunction(*C*, NewTarget, normal, *args*).

NOTE It is permissible but not necessary to have one argument for each formal parameter to be specified. For example, all three of the following expressions produce the same result:

```
new Function("a", "b", "c", "return a+b+c")
new Function("a, b, c", "return a+b+c")
new Function("a,b", "c", "return a+b+c")
```

19.2.1.1.1 Runtime Semantics: CreateDynamicFunction (*constructor*, *newTarget*, *kind*, *args*)

The abstract operation CreateDynamicFunction is called with arguments *constructor*, *newTarget*, *kind*, and *args*. *constructor* is the constructor function that is performing this action, *newTarget* is the constructor that **`new`** was initially applied to, *kind* is either normal, generator, async, or asyncGenerator, and *args* is a List containing the actual argument values that were passed to *constructor*. The following steps are taken:

1. Assert: The execution context stack has at least two elements.
2. Let *callerContext* be the second to top element of the execution context stack.
3. Let *callerRealm* be *callerContext*'s Realm.
4. Let *calleeRealm* be the current Realm Record.
5. Perform ? HostEnsureCanCompileStrings(*callerRealm*, *calleeRealm*).
6. If *newTarget* is **undefined**, set *newTarget* to *constructor*.
7. If *kind* is normal, then
   a. Let *goal* be the grammar symbol *FunctionBody*$_{[\sim Yield,\ \sim Await]}$.
   b. Let *parameterGoal* be the grammar symbol *FormalParameters*$_{[\sim Yield,\ \sim Await]}$.
   c. Let *fallbackProto* be "%**Function.prototype**%".
8. Else if *kind* is generator, then
   a. Let *goal* be the grammar symbol *GeneratorBody*.
   b. Let *parameterGoal* be the grammar symbol *FormalParameters*$_{[+Yield,\ \sim Await]}$.
   c. Let *fallbackProto* be "%**Generator**%".
9. Else if *kind* is async, then
   a. Let *goal* be the grammar symbol *AsyncFunctionBody*.
   b. Let *parameterGoal* be the grammar symbol *FormalParameters*$_{[\sim Yield,\ +Await]}$.
   c. Let *fallbackProto* be "%**AsyncFunction.prototype**%".
10. Else,

a. Assert: *kind* is asyncGenerator.
b. Let *goal* be the grammar symbol *AsyncGeneratorBody*.
c. Let *parameterGoal* be the grammar symbol *FormalParameters*[+Yield, +Await].
d. Let *fallbackProto* be "%**AsyncGenerator**%".

11. Let *argCount* be the number of elements in *args*.
12. Let *P* be the empty String.
13. If *argCount* = 0, let *bodyArg* be the empty String.
14. Else if *argCount* = 1, let *bodyArg* be *args*[0].
15. Else,
    a. Assert: *argCount* > 1.
    b. Let *firstArg* be *args*[0].
    c. Set *P* to ? ToString(*firstArg*).
    d. Let *k* be 1.
    e. Repeat, while *k* < *argCount* - 1
        i. Let *nextArg* be *args*[*k*].
        ii. Let *nextArgString* be ? ToString(*nextArg*).
        iii. Set *P* to the string-concatenation of the previous value of *P*, "," (a comma), and *nextArgString*.
        iv. Set *k* to *k* + 1.
    f. Let *bodyArg* be *args*[*k*].
16. Let *bodyString* be the string-concatenation of 0x000A (LINE FEED), ? ToString(*bodyArg*), and 0x000A (LINE FEED).
17. Perform the following substeps in an implementation-dependent order, possibly interleaving parsing and error detection:
    a. Let *parameters* be the result of parsing ! UTF16DecodeString(*P*), using *parameterGoal* as the goal symbol. Throw a **SyntaxError** exception if the parse fails.
    b. Let *body* be the result of parsing ! UTF16DecodeString(*bodyString*), using *goal* as the goal symbol. Throw a **SyntaxError** exception if the parse fails.
    c. Let *strict* be ContainsUseStrict of *body*.
    d. If any static semantics errors are detected for *parameters* or *body*, throw a **SyntaxError** exception. If *strict* is **true**, the Early Error rules for *UniqueFormalParameters* : *FormalParameters* are applied.
    e. If *strict* is **true** and IsSimpleParameterList of *parameters* is **false**, throw a **SyntaxError** exception.
    f. If any element of the BoundNames of *parameters* also occurs in the LexicallyDeclaredNames of *body*, throw a **SyntaxError** exception.
    g. If *body* Contains *SuperCall* is **true**, throw a **SyntaxError** exception.
    h. If *parameters* Contains *SuperCall* is **true**, throw a **SyntaxError** exception.
    i. If *body* Contains *SuperProperty* is **true**, throw a **SyntaxError** exception.
    j. If *parameters* Contains *SuperProperty* is **true**, throw a **SyntaxError** exception.
    k. If *kind* is generator or asyncGenerator, then
        i. If *parameters* Contains *YieldExpression* is **true**, throw a **SyntaxError** exception.
    l. If *kind* is async or asyncGenerator, then
        i. If *parameters* Contains *AwaitExpression* is **true**, throw a **SyntaxError** exception.
    m. If *strict* is **true**, then
        i. If BoundNames of *parameters* contains any duplicate elements, throw a **SyntaxError** exception.
18. Let *proto* be ? GetPrototypeFromConstructor(*newTarget*, *fallbackProto*).
19. Let *realmF* be the current Realm Record.
20. Let *scope* be *realmF*.[[GlobalEnv]].
21. Let *F* be ! OrdinaryFunctionCreate(*proto*, *parameters*, *body*, non-lexical-this, *scope*).

22. If *kind* is generator, then
    a. Let *prototype* be OrdinaryObjectCreate(%Generator.prototype%).
    b. Perform DefinePropertyOrThrow(*F*, **"prototype"**, PropertyDescriptor { [[Value]]: *prototype*, [[Writable]]: **true**, [[Enumerable]]: **false**, [[Configurable]]: **false** }).
23. Else if *kind* is asyncGenerator, then
    a. Let *prototype* be OrdinaryObjectCreate(%AsyncGenerator.prototype%).
    b. Perform DefinePropertyOrThrow(*F*, **"prototype"**, PropertyDescriptor { [[Value]]: *prototype*, [[Writable]]: **true**, [[Enumerable]]: **false**, [[Configurable]]: **false** }).
24. Else if *kind* is normal, perform MakeConstructor(*F*).
25. NOTE: Async functions are not constructable and do not have a [[Construct]] internal method or a **"prototype"** property.
26. Perform SetFunctionName(*F*, **"anonymous"**).
27. Let *prefix* be the prefix associated with *kind* in Table 48.
28. Let *sourceString* be the string-concatenation of *prefix*, **" anonymous("**, *P*, 0x000A (LINE FEED), **") {"**, *bodyString*, and **"}"**.
29. Set *F*.[[SourceText]] to ! UTF16DecodeString(*sourceString*).
30. Return *F*.

NOTE A **"prototype"** property is created for every non-async function created using CreateDynamicFunction to provide for the possibility that the function will be used as a constructor.

Table 48: Dynamic Function SourceText Prefixes

Kind	Prefix
normal	**"function"**
generator	**"function*"**
async	**"async function"**
asyncGenerator	**"async function*"**

19.2.2 Properties of the Function Constructor

The Function constructor:

- is itself a built-in function object.
- has a [[Prototype]] internal slot whose value is %Function.prototype%.
- has the following properties:

19.2.2.1 Function.length

This is a data property with a value of 1. This property has the attributes { [[Writable]]: **false**, [[Enumerable]]: **false**, [[Configurable]]: **true** }.

19.2.2.2 Function.prototype

The value of **`Function.prototype`** is %Function.prototype%, the intrinsic Function prototype object.

This property has the attributes { [[Writable]]: **false**, [[Enumerable]]: **false**, [[Configurable]]: **false** }.

19.2.3 Properties of the Function Prototype Object

The Function prototype object:

- is *%Function.prototype%*.
- is itself a built-in function object.
- accepts any arguments and returns **undefined** when invoked.
- does not have a [[Construct]] internal method; it cannot be used as a constructor with the **`new`** operator.
- has a [[Prototype]] internal slot whose value is %Object.prototype%.
- does not have a **"prototype"** property.
- has a **"length"** property whose value is 0.
- has a **"name"** property whose value is the empty String.

NOTE The Function prototype object is specified to be a function object to ensure compatibility with ECMAScript code that was created prior to the ECMAScript 2015 specification.

19.2.3.1 Function.prototype.apply (*thisArg*, *argArray*)

When the **`apply`** method is called with arguments *thisArg* and *argArray*, the following steps are taken:

1. Let *func* be the **this** value.
2. If IsCallable(*func*) is **false**, throw a **TypeError** exception.
3. If *argArray* is **undefined** or **null**, then
   a. Perform PrepareForTailCall().
   b. Return ? Call(*func*, *thisArg*).
4. Let *argList* be ? CreateListFromArrayLike(*argArray*).
5. Perform PrepareForTailCall().
6. Return ? Call(*func*, *thisArg*, *argList*).

NOTE 1 The *thisArg* value is passed without modification as the **this** value. This is a change from Edition 3, where an **undefined** or **null** *thisArg* is replaced with the global object and ToObject is applied to all other values and that result is passed as the **this** value. Even though the *thisArg* is passed without modification, non-strict functions still perform these transformations upon entry to the function.

NOTE 2 If *func* is an arrow function or a bound function exotic object then the *thisArg* will be ignored by the function [[Call]] in step 6.

19.2.3.2 Function.prototype.bind (*thisArg*, ...*args*)

When the **`bind`** method is called with argument *thisArg* and zero or more *args*, it performs the following steps:

1. Let *Target* be the **this** value.

2. If IsCallable(*Target*) is **false**, throw a **TypeError** exception.
3. Let *args* be a new (possibly empty) List consisting of all of the argument values provided after *thisArg* in order.
4. Let *F* be ? BoundFunctionCreate(*Target*, *thisArg*, *args*).
5. Let *targetHasLength* be ? HasOwnProperty(*Target*, **"length"**).
6. If *targetHasLength* is **true**, then
    a. Let *targetLen* be ? Get(*Target*, **"length"**).
    b. If Type(*targetLen*) is not Number, let *L* be 0.
    c. Else,
        i. Set *targetLen* to ! ToInteger(*targetLen*).
        ii. Let *L* be the larger of 0 and the result of *targetLen* minus the number of elements of *args*.
7. Else, let *L* be 0.
8. Perform ! SetFunctionLength(*F*, *L*).
9. Let *targetName* be ? Get(*Target*, **"name"**).
10. If Type(*targetName*) is not String, set *targetName* to the empty String.
11. Perform SetFunctionName(*F*, *targetName*, **"bound"**).
12. Return *F*.

NOTE 1 Function objects created using **`Function.prototype.bind`** are exotic objects. They also do not have a **"prototype"** property.

NOTE 2 If *Target* is an arrow function or a bound function exotic object then the *thisArg* passed to this method will not be used by subsequent calls to *F*.

19.2.3.3 Function.prototype.call (*thisArg*, ...*args*)

When the **`call`** method is called with argument *thisArg* and zero or more *args*, the following steps are taken:

1. Let *func* be the **this** value.
2. If IsCallable(*func*) is **false**, throw a **TypeError** exception.
3. Let *argList* be a new empty List.
4. If this method was called with more than one argument, then in left to right order, starting with the second argument, append each argument as the last element of *argList*.
5. Perform PrepareForTailCall().
6. Return ? Call(*func*, *thisArg*, *argList*).

NOTE 1 The *thisArg* value is passed without modification as the **this** value. This is a change from Edition 3, where an **undefined** or **null** *thisArg* is replaced with the global object and ToObject is applied to all other values and that result is passed as the **this** value. Even though the *thisArg* is passed without modification, non-strict functions still perform these transformations upon entry to the function.

NOTE 2 If *func* is an arrow function or a bound function exotic object then the *thisArg* will be ignored by the function [[Call]] in step 6.

19.2.3.4 Function.prototype.constructor

The initial value of **`Function.prototype.constructor`** is %Function%.

19.2.3.5 Function.prototype.toString ( )

When the **`toString`** method is called, the following steps are taken:

1. Let *func* be the **this** value.
2. If *func* is a bound function exotic object or a built-in function object, then return an implementation-dependent String source code representation of *func*. The representation must have the syntax of a *NativeFunction*. Additionally, if *func* is a Well-known Intrinsic Object and is not identified as an anonymous function, the portion of the returned String that would be matched by *PropertyName* must be the initial value of the **"name"** property of *func*.
3. If Type(*func*) is Object and *func* has a [[SourceText]] internal slot and *func*.[[SourceText]] is a sequence of Unicode code points and ! HostHasSourceTextAvailable(*func*) is **true**, then
   a. Return ! UTF16Encode(*func*.[[SourceText]]).
4. If Type(*func*) is Object and IsCallable(*func*) is **true**, then return an implementation-dependent String source code representation of *func*. The representation must have the syntax of a *NativeFunction*.
5. Throw a **TypeError** exception.

NativeFunction **:**

function *PropertyName*$_{[\sim Yield,\ \sim Await]\ opt}$ **(** *FormalParameters*$_{[\sim Yield,\ \sim Await]}$ **) { [native code] }**

19.2.3.6 Function.prototype [@@hasInstance] (*V*)

When the **`@@hasInstance`** method of an object *F* is called with value *V*, the following steps are taken:

1. Let *F* be the **this** value.
2. Return ? OrdinaryHasInstance(*F*, *V*).

The value of the **"name"** property of this function is **"[Symbol.hasInstance]"**.

This property has the attributes { [[Writable]]: **false**, [[Enumerable]]: **false**, [[Configurable]]: **false** }.

> NOTE
>
> This is the default implementation of **`@@hasInstance`** that most functions inherit. **`@@hasInstance`** is called by the **`instanceof`** operator to determine whether a value is an instance of a specific constructor. An expression such as
>
> `v instanceof F`
>
> evaluates as
>
> `F[@@hasInstance](v)`
>
> A constructor function can control which objects are recognized as its instances by **`instanceof`** by exposing a different **`@@hasInstance`** method on the function.

This property is non-writable and non-configurable to prevent tampering that could be used to globally expose the target function of a bound function.

19.2.4 Function Instances

Every Function instance is an ECMAScript function object and has the internal slots listed in Table 27. Function objects created using the **`Function.prototype.bind`** method (19.2.3.2) have the internal slots listed in Table 28.

Function instances have the following properties:

19.2.4.1 length

The value of the **"length"** property is an integer that indicates the typical number of arguments expected by the function. However, the language permits the function to be invoked with some other number of arguments. The behaviour of a function when invoked on a number of arguments other than the number specified by its **"length"** property depends on the function. This property has the attributes { [[Writable]]: **false**, [[Enumerable]]: **false**, [[Configurable]]: **true** }.

19.2.4.2 name

The value of the **"name"** property is a String that is descriptive of the function. The name has no semantic significance but is typically a variable or property name that is used to refer to the function at its point of definition in ECMAScript code. This property has the attributes { [[Writable]]: **false**, [[Enumerable]]: **false**, [[Configurable]]: **true** }.

Anonymous functions objects that do not have a contextual name associated with them by this specification do not have a **"name"** own property but inherit the **"name"** property of %Function.prototype%.

19.2.4.3 prototype

Function instances that can be used as a constructor have a **"prototype"** property. Whenever such a Function instance is created another ordinary object is also created and is the initial value of the function's **"prototype"** property. Unless otherwise specified, the value of the **"prototype"** property is used to initialize the [[Prototype]] internal slot of the object created when that function is invoked as a constructor.

This property has the attributes { [[Writable]]: **true**, [[Enumerable]]: **false**, [[Configurable]]: **false** }.

> NOTE Function objects created using **`Function.prototype.bind`**, or by evaluating a *MethodDefinition* (that is not a *GeneratorMethod* or *AsyncGeneratorMethod*) or an *ArrowFunction* do not have a **"prototype"** property.

19.2.5 HostHasSourceTextAvailable (*func*)

HostHasSourceTextAvailable is an implementation-defined abstract operation that allows host environments to prevent the source text from being provided for a given function.

An implementation of HostHasSourceTextAvailable must complete normally in all cases. This operation must be deterministic with respect to its parameters. Each time it is called with a specific *func* as its argument, it must return the same completion record. The default implementation of HostHasSourceTextAvailable is to unconditionally return a normal completion with a value of **true**.

19.3 Boolean Objects

19.3.1 The Boolean Constructor

The Boolean constructor:

- is the intrinsic object *%Boolean%*.
- is the initial value of the **"Boolean"** property of the global object.
- creates and initializes a new Boolean object when called as a constructor.
- performs a type conversion when called as a function rather than as a constructor.
- is designed to be subclassable. It may be used as the value of an `extends` clause of a class definition. Subclass constructors that intend to inherit the specified `Boolean` behaviour must include a `super` call to the `Boolean` constructor to create and initialize the subclass instance with a [[BooleanData]] internal slot.

19.3.1.1 Boolean (*value*)

When `Boolean` is called with argument *value*, the following steps are taken:

1. Let *b* be ! ToBoolean(*value*).
2. If NewTarget is **undefined**, return *b*.
3. Let *O* be ? OrdinaryCreateFromConstructor(NewTarget, **"%Boolean.prototype%"**, « [[BooleanData]] »).
4. Set *O*.[[BooleanData]] to *b*.
5. Return *O*.

19.3.2 Properties of the Boolean Constructor

The Boolean constructor:

- has a [[Prototype]] internal slot whose value is %Function.prototype%.
- has the following properties:

19.3.2.1 Boolean.prototype

The initial value of `Boolean.prototype` is %Boolean.prototype%.

This property has the attributes { [[Writable]]: **false**, [[Enumerable]]: **false**, [[Configurable]]: **false** }.

19.3.3 Properties of the Boolean Prototype Object

The Boolean prototype object:

- is the intrinsic object *%BooleanPrototype%*.
- is an ordinary object.
- is itself a Boolean object; it has a [[BooleanData]] internal slot with the value **false**.
- has a [[Prototype]] internal slot whose value is %Object.prototype%.

The abstract operation *thisBooleanValue*(*value*) performs the following steps:

1. If Type(*value*) is Boolean, return *value*.
2. If Type(*value*) is Object and *value* has a [[BooleanData]] internal slot, then
    a. Let *b* be *value*.[[BooleanData]].
    b. Assert: Type(*b*) is Boolean.

c. Return *b*.

3. Throw a **TypeError** exception.

19.3.3.1 Boolean.prototype.constructor

The initial value of **`Boolean.prototype.constructor`** is %Boolean%.

19.3.3.2 Boolean.prototype.toString ( )

The following steps are taken:

1. Let *b* be ? thisBooleanValue(**this** value).
2. If *b* is **true**, return **"true"**; else return **"false"**.

19.3.3.3 Boolean.prototype.valueOf ( )

The following steps are taken:

1. Return ? thisBooleanValue(**this** value).

19.3.4 Properties of Boolean Instances

Boolean instances are ordinary objects that inherit properties from the Boolean prototype object. Boolean instances have a [[BooleanData]] internal slot. The [[BooleanData]] internal slot is the Boolean value represented by this Boolean object.

19.4 Symbol Objects

19.4.1 The Symbol Constructor

The Symbol constructor:

- is the intrinsic object *%Symbol%*.
- is the initial value of the **"Symbol"** property of the global object.
- returns a new Symbol value when called as a function.
- is not intended to be used with the **`new`** operator.
- is not intended to be subclassed.
- may be used as the value of an **`extends`** clause of a class definition but a **`super`** call to it will cause an exception.

19.4.1.1 Symbol ([*description*])

When **`Symbol`** is called with optional argument *description*, the following steps are taken:

1. If NewTarget is not **undefined**, throw a **TypeError** exception.
2. If *description* is **undefined**, let *descString* be **undefined**.
3. Else, let *descString* be ? ToString(*description*).
4. Return a new unique Symbol value whose [[Description]] value is *descString*.

19.4.2 Properties of the Symbol Constructor

The Symbol constructor:

- has a [[Prototype]] internal slot whose value is %Function.prototype%.
- has the following properties:

19.4.2.1 Symbol.asyncIterator

The initial value of **`Symbol.asyncIterator`** is the well known symbol @@asyncIterator (Table 1).

This property has the attributes { [[Writable]]: **false**, [[Enumerable]]: **false**, [[Configurable]]: **false** }.

19.4.2.2 Symbol.for (*key*)

When **`Symbol.for`** is called with argument *key* it performs the following steps:

1. Let *stringKey* be ? ToString(*key*).
2. For each element *e* of the GlobalSymbolRegistry List, do
   a. If SameValue(*e*.[[Key]], *stringKey*) is **true**, return *e*.[[Symbol]].
3. Assert: GlobalSymbolRegistry does not currently contain an entry for *stringKey*.
4. Let *newSymbol* be a new unique Symbol value whose [[Description]] value is *stringKey*.
5. Append the Record { [[Key]]: *stringKey*, [[Symbol]]: *newSymbol* } to the GlobalSymbolRegistry List.
6. Return *newSymbol*.

The GlobalSymbolRegistry is a List that is globally available. It is shared by all realms. Prior to the evaluation of any ECMAScript code it is initialized as a new empty List. Elements of the GlobalSymbolRegistry are Records with the structure defined in Table 49.

Table 49: GlobalSymbolRegistry Record Fields

Field Name	Value	Usage
[[Key]]	A String	A string key used to globally identify a Symbol.
[[Symbol]]	A Symbol	A symbol that can be retrieved from any realm.

19.4.2.3 Symbol.hasInstance

The initial value of **`Symbol.hasInstance`** is the well-known symbol @@hasInstance (Table 1).

This property has the attributes { [[Writable]]: **false**, [[Enumerable]]: **false**, [[Configurable]]: **false** }.

19.4.2.4 Symbol.isConcatSpreadable

The initial value of **`Symbol.isConcatSpreadable`** is the well-known symbol @@isConcatSpreadable (Table 1).

This property has the attributes { [[Writable]]: **false**, [[Enumerable]]: **false**, [[Configurable]]: **false** }.

19.4.2.5 Symbol.iterator

The initial value of **`Symbol.iterator`** is the well-known symbol @@iterator (Table 1).

This property has the attributes { [[Writable]]: **false**, [[Enumerable]]: **false**, [[Configurable]]: **false** }.

19.4.2.6 Symbol.keyFor (*sym*)

When **`Symbol.keyFor`** is called with argument *sym* it performs the following steps:

1. If Type(*sym*) is not Symbol, throw a **TypeError** exception.
2. For each element *e* of the GlobalSymbolRegistry List (see 19.4.2.2), do
   a. If SameValue(*e*.[[Symbol]], *sym*) is **true**, return *e*.[[Key]].
3. Assert: GlobalSymbolRegistry does not currently contain an entry for *sym*.
4. Return **undefined**.

19.4.2.7 Symbol.match

The initial value of **`Symbol.match`** is the well-known symbol @@match (Table 1).

This property has the attributes { [[Writable]]: **false**, [[Enumerable]]: **false**, [[Configurable]]: **false** }.

19.4.2.8 Symbol.matchAll

The initial value of **`Symbol.matchAll`** is the well-known symbol @@matchAll (Table 3).

This property has the attributes { [[Writable]]: **false**, [[Enumerable]]: **false**, [[Configurable]]: **false** }.

19.4.2.9 Symbol.prototype

The initial value of **`Symbol.prototype`** is %Symbol.prototype%.

This property has the attributes { [[Writable]]: **false**, [[Enumerable]]: **false**, [[Configurable]]: **false** }.

19.4.2.10 Symbol.replace

The initial value of **`Symbol.replace`** is the well-known symbol @@replace (Table 1).

This property has the attributes { [[Writable]]: **false**, [[Enumerable]]: **false**, [[Configurable]]: **false** }.

19.4.2.11 Symbol.search

The initial value of **`Symbol.search`** is the well-known symbol @@search (Table 1).

This property has the attributes { [[Writable]]: **false**, [[Enumerable]]: **false**, [[Configurable]]: **false** }.

19.4.2.12 Symbol.species

The initial value of **`Symbol.species`** is the well-known symbol @@species (Table 1).

This property has the attributes { [[Writable]]: **false**, [[Enumerable]]: **false**, [[Configurable]]: **false** }.

19.4.2.13 Symbol.split

The initial value of **`Symbol.split`** is the well-known symbol @@split (Table 1).

This property has the attributes { [[Writable]]: **false**, [[Enumerable]]: **false**, [[Configurable]]: **false** }.

19.4.2.14 Symbol.toPrimitive

The initial value of **`Symbol.toPrimitive`** is the well-known symbol @@toPrimitive (Table 1).

This property has the attributes { [[Writable]]: **false**, [[Enumerable]]: **false**, [[Configurable]]: **false** }.

19.4.2.15 Symbol.toStringTag

The initial value of **`Symbol.toStringTag`** is the well-known symbol @@toStringTag (Table 1).

This property has the attributes { [[Writable]]: **false**, [[Enumerable]]: **false**, [[Configurable]]: **false** }.

19.4.2.16 Symbol.unscopables

The initial value of **`Symbol.unscopables`** is the well-known symbol @@unscopables (Table 1).

This property has the attributes { [[Writable]]: **false**, [[Enumerable]]: **false**, [[Configurable]]: **false** }.

19.4.3 Properties of the Symbol Prototype Object

The Symbol prototype object:

- is the intrinsic object *%SymbolPrototype%*.
- is an ordinary object.
- is not a Symbol instance and does not have a [[SymbolData]] internal slot.
- has a [[Prototype]] internal slot whose value is %Object.prototype%.

The abstract operation *thisSymbolValue*(*value*) performs the following steps:

1. If Type(*value*) is Symbol, return *value*.
2. If Type(*value*) is Object and *value* has a [[SymbolData]] internal slot, then
    a. Let *s* be *value*.[[SymbolData]].
    b. Assert: Type(*s*) is Symbol.
    c. Return *s*.
3. Throw a **TypeError** exception.

19.4.3.1 Symbol.prototype.constructor

The initial value of **`Symbol.prototype.constructor`** is %Symbol%.

19.4.3.2 get Symbol.prototype.description

`Symbol.prototype.description` is an accessor property whose set accessor function is **undefined**. Its get accessor function performs the following steps:

1. Let *s* be the **this** value.
2. Let *sym* be ? thisSymbolValue(*s*).
3. Return *sym*.[[Description]].

19.4.3.3 Symbol.prototype.toString ( )

The following steps are taken:

1. Let *sym* be ? thisSymbolValue(**this** value).
2. Return SymbolDescriptiveString(*sym*).

19.4.3.3.1 Runtime Semantics: SymbolDescriptiveString (*sym*)

When the abstract operation SymbolDescriptiveString is called with argument *sym*, the following steps are taken:

1. Assert: Type(*sym*) is Symbol.
2. Let *desc* be *sym*'s [[Description]] value.
3. If *desc* is **undefined**, set *desc* to the empty String.
4. Assert: Type(*desc*) is String.
5. Return the string-concatenation of **"Symbol("**, *desc*, and **")"**.

19.4.3.4 Symbol.prototype.valueOf ( )

The following steps are taken:

1. Return ? thisSymbolValue(**this** value).

19.4.3.5 Symbol.prototype [@@toPrimitive] (*hint*)

This function is called by ECMAScript language operators to convert a Symbol object to a primitive value. The allowed values for *hint* are **"default"**, **"number"**, and **"string"**.

When the **`@@toPrimitive`** method is called with argument *hint*, the following steps are taken:

1. Return ? thisSymbolValue(**this** value).

The value of the **"name"** property of this function is **"[Symbol.toPrimitive]"**.

This property has the attributes { [[Writable]]: **false**, [[Enumerable]]: **false**, [[Configurable]]: **true** }.

19.4.3.6 Symbol.prototype [@@toStringTag]

The initial value of the @@toStringTag property is the String value **"Symbol"**.

This property has the attributes { [[Writable]]: **false**, [[Enumerable]]: **false**, [[Configurable]]: **true** }.

19.4.4 Properties of Symbol Instances

Symbol instances are ordinary objects that inherit properties from the Symbol prototype object. Symbol instances have a [[SymbolData]] internal slot. The [[SymbolData]] internal slot is the Symbol value represented by this Symbol object.

19.5 Error Objects

Instances of Error objects are thrown as exceptions when runtime errors occur. The Error objects may also serve as base objects for user-defined exception classes.

19.5.1 The Error Constructor

The Error constructor:

- is the intrinsic object *%Error%*.
- is the initial value of the **"Error"** property of the global object.
- creates and initializes a new Error object when called as a function rather than as a constructor. Thus the function call `Error(…)` is equivalent to the object creation expression `new Error(…)` with the same arguments.
- is designed to be subclassable. It may be used as the value of an `extends` clause of a class definition. Subclass constructors that intend to inherit the specified `Error` behaviour must include a `super` call to the `Error` constructor to create and initialize subclass instances with an [[ErrorData]] internal slot.

19.5.1.1 Error (*message*)

When the `Error` function is called with argument *message*, the following steps are taken:

1. If NewTarget is **undefined**, let *newTarget* be the active function object; else let *newTarget* be NewTarget.
2. Let *O* be ? OrdinaryCreateFromConstructor(*newTarget*, **"%Error.prototype%"**, « [[ErrorData]] »).
3. If *message* is not **undefined**, then
    a. Let *msg* be ? ToString(*message*).
    b. Let *msgDesc* be the PropertyDescriptor { [[Value]]: *msg*, [[Writable]]: **true**, [[Enumerable]]: **false**, [[Configurable]]: **true** }.
    c. Perform ! DefinePropertyOrThrow(*O*, **"message"**, *msgDesc*).
4. Return *O*.

19.5.2 Properties of the Error Constructor

The Error constructor:

- has a [[Prototype]] internal slot whose value is %Function.prototype%.
- has the following properties:

19.5.2.1 Error.prototype

The initial value of `Error.prototype` is %Error.prototype%.

This property has the attributes { [[Writable]]: **false**, [[Enumerable]]: **false**, [[Configurable]]: **false** }.

19.5.3 Properties of the Error Prototype Object

The Error prototype object:

- is the intrinsic object *%ErrorPrototype%*.

- is an ordinary object.
- is not an Error instance and does not have an [[ErrorData]] internal slot.
- has a [[Prototype]] internal slot whose value is %Object.prototype%.

19.5.3.1 Error.prototype.constructor

The initial value of **`Error.prototype.constructor`** is %Error%.

19.5.3.2 Error.prototype.message

The initial value of **`Error.prototype.message`** is the empty String.

19.5.3.3 Error.prototype.name

The initial value of **`Error.prototype.name`** is **"Error"**.

19.5.3.4 Error.prototype.toString ( )

The following steps are taken:

1. Let *O* be the **this** value.
2. If Type(*O*) is not Object, throw a **TypeError** exception.
3. Let *name* be ? Get(*O*, **"name"**).
4. If *name* is **undefined**, set *name* to **"Error"**; otherwise set *name* to ? ToString(*name*).
5. Let *msg* be ? Get(*O*, **"message"**).
6. If *msg* is **undefined**, set *msg* to the empty String; otherwise set *msg* to ? ToString(*msg*).
7. If *name* is the empty String, return *msg*.
8. If *msg* is the empty String, return *name*.
9. Return the string-concatenation of *name*, the code unit 0x003A (COLON), the code unit 0x0020 (SPACE), and *msg*.

19.5.4 Properties of Error Instances

Error instances are ordinary objects that inherit properties from the Error prototype object and have an [[ErrorData]] internal slot whose value is **undefined**. The only specified uses of [[ErrorData]] is to identify Error and *NativeError* instances as Error objects within **`Object.prototype.toString`**.

19.5.5 Native Error Types Used in This Standard

A new instance of one of the *NativeError* objects below is thrown when a runtime error is detected. All of these objects share the same structure, as described in 19.5.6.

19.5.5.1 EvalError

This exception is not currently used within this specification. This object remains for compatibility with previous editions of this specification.

19.5.5.2 RangeError

Indicates a value that is not in the set or range of allowable values.

19.5.5.3 ReferenceError

Indicate that an invalid reference value has been detected.

19.5.5.4 SyntaxError

Indicates that a parsing error has occurred.

19.5.5.5 TypeError

TypeError is used to indicate an unsuccessful operation when none of the other *NativeError* objects are an appropriate indication of the failure cause.

19.5.5.6 URIError

Indicates that one of the global URI handling functions was used in a way that is incompatible with its definition.

19.5.6 *NativeError* Object Structure

When an ECMAScript implementation detects a runtime error, it throws a new instance of one of the *NativeError* objects defined in 19.5.5. Each of these objects has the structure described below, differing only in the name used as the constructor name instead of *NativeError*, in the **"name"** property of the prototype object, and in the implementation-defined **"message"** property of the prototype object.

For each error object, references to *NativeError* in the definition should be replaced with the appropriate error object name from 19.5.5.

19.5.6.1 The *NativeError* Constructors

Each *NativeError* constructor:

- creates and initializes a new *NativeError* object when called as a function rather than as a constructor. A call of the object as a function is equivalent to calling it as a constructor with the same arguments. Thus the function call ***`NativeError`***`(…)` is equivalent to the object creation expression `new` ***`NativeError`***`(…)` with the same arguments.
- is designed to be subclassable. It may be used as the value of an `extends` clause of a class definition. Subclass constructors that intend to inherit the specified *NativeError* behaviour must include a `super` call to the *NativeError* constructor to create and initialize subclass instances with an [[ErrorData]] internal slot.

19.5.6.1.1 *NativeError* (*message*)

When a *NativeError* function is called with argument *message*, the following steps are taken:

1. If NewTarget is **undefined**, let *newTarget* be the active function object; else let *newTarget* be NewTarget.
2. Let *O* be ? OrdinaryCreateFromConstructor(*newTarget*, **"%*NativeError*.prototype%"**, « [[ErrorData]] »).
3. If *message* is not **undefined**, then

a. Let *msg* be ? ToString(*message*).
b. Let *msgDesc* be the PropertyDescriptor { [[Value]]: *msg*, [[Writable]]: **true**, [[Enumerable]]: **false**, [[Configurable]]: **true** }.
c. Perform ! DefinePropertyOrThrow(*O*, **"message"**, *msgDesc*).

4. Return *O*.

The actual value of the string passed in step 2 is either **"%EvalError.prototype%"**, **"%RangeError.prototype%"**, **"%ReferenceError.prototype%"**, **"%SyntaxError.prototype%"**, **"%TypeError.prototype%"**, or **"%URIError.prototype%"** corresponding to which *NativeError* constructor is being defined.

19.5.6.2 Properties of the *NativeError* Constructors

Each *NativeError* constructor:

- has a [[Prototype]] internal slot whose value is %Error%.
- has a **"name"** property whose value is the String value ***"NativeError"***.
- has the following properties:

19.5.6.2.1 *NativeError*.prototype

The initial value of ***`NativeError`***`.prototype` is a *NativeError* prototype object (19.5.6.3). Each *NativeError* constructor has a distinct prototype object.

This property has the attributes { [[Writable]]: **false**, [[Enumerable]]: **false**, [[Configurable]]: **false** }.

19.5.6.3 Properties of the *NativeError* Prototype Objects

Each *NativeError* prototype object:

- is an ordinary object.
- is not an Error instance and does not have an [[ErrorData]] internal slot.
- has a [[Prototype]] internal slot whose value is %Error.prototype%.

19.5.6.3.1 *NativeError*.prototype.constructor

The initial value of the **"constructor"** property of the prototype for a given *NativeError* constructor is the corresponding intrinsic object *%NativeError%* (19.5.6.1).

19.5.6.3.2 *NativeError*.prototype.message

The initial value of the **"message"** property of the prototype for a given *NativeError* constructor is the empty String.

19.5.6.3.3 *NativeError*.prototype.name

The initial value of the **"name"** property of the prototype for a given *NativeError* constructor is the String value consisting of the name of the constructor (the name used instead of *NativeError*).

19.5.6.4 Properties of *NativeError* Instances

NativeError instances are ordinary objects that inherit properties from their *NativeError* prototype object and have an [[ErrorData]] internal slot whose value is **undefined**. The only specified use of [[ErrorData]] is by

`Object.prototype.toString` (19.1.3.6) to identify Error or *NativeError* instances.

20 Numbers and Dates

20.1 Number Objects

20.1.1 The Number Constructor

The Number constructor:

- is the intrinsic object *%Number%*.
- is the initial value of the **"Number"** property of the global object.
- creates and initializes a new Number object when called as a constructor.
- performs a type conversion when called as a function rather than as a constructor.
- is designed to be subclassable. It may be used as the value of an **`extends`** clause of a class definition. Subclass constructors that intend to inherit the specified **`Number`** behaviour must include a **`super`** call to the **`Number`** constructor to create and initialize the subclass instance with a [[NumberData]] internal slot.

20.1.1.1 Number (*value*)

When **`Number`** is called with argument *value*, the following steps are taken:

1. If *value* is present, then
    a. Let *prim* be ? ToNumeric(*value*).
    b. If Type(*prim*) is BigInt, let *n* be the Number value for the mathematical value of *prim*.
    c. Otherwise, let *n* be *prim*.
2. Else,
    a. Let *n* be **+0**.
3. If NewTarget is **undefined**, return *n*.
4. Let *O* be ? OrdinaryCreateFromConstructor(NewTarget, **"%Number.prototype%"**, « [[NumberData]] »).
5. Set *O*.[[NumberData]] to *n*.
6. Return *O*.

20.1.2 Properties of the Number Constructor

The Number constructor:

- has a [[Prototype]] internal slot whose value is %Function.prototype%.
- has the following properties:

20.1.2.1 Number.EPSILON

The value of **`Number.EPSILON`** is the difference between 1 and the smallest value greater than 1 that is representable as a Number value, which is approximately $2.2204460492503130808472633361816 \times 10^{-16}$.

This property has the attributes { [[Writable]]: **false**, [[Enumerable]]: **false**, [[Configurable]]: **false** }.

20.1.2.2 Number.isFinite (*number*)

When **`Number.isFinite`** is called with one argument *number*, the following steps are taken:

1. If Type(*number*) is not Number, return **false**.
2. If *number* is **NaN**, +∞, or -∞, return **false**.
3. Otherwise, return **true**.

20.1.2.3 Number.isInteger (*number*)

When **`Number.isInteger`** is called with one argument *number*, the following steps are taken:

1. Return ! IsInteger(*number*).

20.1.2.4 Number.isNaN (*number*)

When **`Number.isNaN`** is called with one argument *number*, the following steps are taken:

1. If Type(*number*) is not Number, return **false**.
2. If *number* is **NaN**, return **true**.
3. Otherwise, return **false**.

> NOTE This function differs from the global isNaN function (18.2.3) in that it does not convert its argument to a Number before determining whether it is **NaN**.

20.1.2.5 Number.isSafeInteger (*number*)

When **`Number.isSafeInteger`** is called with one argument *number*, the following steps are taken:

1. If ! IsInteger(*number*) is **true**, then
   a. If abs(*number*) ≤ 2^{53} - 1, return **true**.
2. Return **false**.

20.1.2.6 Number.MAX_SAFE_INTEGER

> NOTE The value of **`Number.MAX_SAFE_INTEGER`** is the largest integer n such that n and n + 1 are both exactly representable as a Number value.

The value of **`Number.MAX_SAFE_INTEGER`** is 9007199254740991 (2^{53} - 1).

This property has the attributes { [[Writable]]: **false**, [[Enumerable]]: **false**, [[Configurable]]: **false** }.

20.1.2.7 Number.MAX_VALUE

The value of **`Number.MAX_VALUE`** is the largest positive finite value of the Number type, which is approximately $1.7976931348623157 \times 10^{308}$.

This property has the attributes { [[Writable]]: **false**, [[Enumerable]]: **false**, [[Configurable]]: **false** }.

20.1.2.8 Number.MIN_SAFE_INTEGER

> NOTE The value of **`Number.MIN_SAFE_INTEGER`** is the smallest integer n such that n and n - 1 are both exactly representable as a Number value.

The value of **`Number.MIN_SAFE_INTEGER`** is -9007199254740991 (-(2^{53} - 1)).

This property has the attributes { [[Writable]]: **false**, [[Enumerable]]: **false**, [[Configurable]]: **false** }.

20.1.2.9 Number.MIN_VALUE

The value of **`Number.MIN_VALUE`** is the smallest positive value of the Number type, which is approximately 5×10^{-324}.

In the IEEE 754-2019 double precision binary representation, the smallest possible value is a denormalized number. If an implementation does not support denormalized values, the value of **`Number.MIN_VALUE`** must be the smallest non-zero positive value that can actually be represented by the implementation.

This property has the attributes { [[Writable]]: **false**, [[Enumerable]]: **false**, [[Configurable]]: **false** }.

20.1.2.10 Number.NaN

The value of **`Number.NaN`** is NaN.

This property has the attributes { [[Writable]]: **false**, [[Enumerable]]: **false**, [[Configurable]]: **false** }.

20.1.2.11 Number.NEGATIVE_INFINITY

The value of **`Number.NEGATIVE_INFINITY`** is **-**∞.

This property has the attributes { [[Writable]]: **false**, [[Enumerable]]: **false**, [[Configurable]]: **false** }.

20.1.2.12 Number.parseFloat (*string*)

The value of the **`Number.parseFloat`** data property is the same built-in function object that is the value of the **"parseFloat"** property of the global object defined in 18.2.4.

20.1.2.13 Number.parseInt (*string*, *radix*)

The value of the **`Number.parseInt`** data property is the same built-in function object that is the value of the **"parseInt"** property of the global object defined in 18.2.5.

20.1.2.14 Number.POSITIVE_INFINITY

The value of **`Number.POSITIVE_INFINITY`** is +∞.

This property has the attributes { [[Writable]]: **false**, [[Enumerable]]: **false**, [[Configurable]]: **false** }.

20.1.2.15 Number.prototype

The initial value of **`Number.prototype`** is %Number.prototype%.

This property has the attributes { [[Writable]]: **false**, [[Enumerable]]: **false**, [[Configurable]]: **false** }.

20.1.3 Properties of the Number Prototype Object

The Number prototype object:

- is the intrinsic object *%NumberPrototype%*.
- is an ordinary object.
- is itself a Number object; it has a [[NumberData]] internal slot with the value **+0**.
- has a [[Prototype]] internal slot whose value is %Object.prototype%.

Unless explicitly stated otherwise, the methods of the Number prototype object defined below are not generic and the **this** value passed to them must be either a Number value or an object that has a [[NumberData]] internal slot that has been initialized to a Number value.

The abstract operation *thisNumberValue*(*value*) performs the following steps:

1. If Type(*value*) is Number, return *value*.
2. If Type(*value*) is Object and *value* has a [[NumberData]] internal slot, then
    a. Let *n* be *value*.[[NumberData]].
    b. Assert: Type(*n*) is Number.
    c. Return *n*.
3. Throw a **TypeError** exception.

The phrase "this Number value" within the specification of a method refers to the result returned by calling the abstract operation thisNumberValue with the **this** value of the method invocation passed as the argument.

20.1.3.1 Number.prototype.constructor

The initial value of **`Number.prototype.constructor`** is %Number%.

20.1.3.2 Number.prototype.toExponential (*fractionDigits*)

Return a String containing this Number value represented in decimal exponential notation with one digit before the significand's decimal point and *fractionDigits* digits after the significand's decimal point. If *fractionDigits* is **undefined**, include as many significand digits as necessary to uniquely specify the Number (just like in ToString except that in this case the Number is always output in exponential notation). Specifically, perform the following steps:

1. Let *x* be ? thisNumberValue(**this** value).
2. Let *f* be ? ToInteger(*fractionDigits*).
3. Assert: If *fractionDigits* is **undefined**, then *f* is 0.
4. If *x* is **NaN**, return the String **"NaN"**.
5. Let *s* be the empty String.
6. If $x < 0$, then
    a. Set *s* to **"-"**.
    b. Set *x* to -*x*.

7. If $x = +\infty$, then
    a. Return the string-concatenation of s and **"Infinity"**.
8. If $f < 0$ or $f > 100$, throw a **RangeError** exception.
9. If $x = 0$, then
    a. Let m be the String value consisting of $f + 1$ occurrences of the code unit 0x0030 (DIGIT ZERO).
    b. Let e be 0.
10. Else,
    a. If *fractionDigits* is not **undefined**, then
        i. Let e and n be integers such that $10^f \le n < 10^{f+1}$ and for which $\mathbb{R}(n) \times 10_{\mathbb{R}}^{\mathbb{R}(e) - \mathbb{R}(n)} - \mathbb{R}(x)$ is as close to zero as possible. If there are two such sets of e and n, pick the e and n for which $\mathbb{R}(n) \times 10_{\mathbb{R}}^{\mathbb{R}(e) - \mathbb{R}(f)}$ is larger.
    b. Else,
        i. Let e, n, and f be integers such that $f \ge 0$, $10^f \le n < 10^{f+1}$, the Number value for $\mathbb{R}(n) \times 10_{\mathbb{R}}^{\mathbb{R}(e) - \mathbb{R}(f)}$ is x, and f is as small as possible. Note that the decimal representation of n has $f + 1_{\mathbb{R}}$ digits, n is not divisible by 10, and the least significant digit of n is not necessarily uniquely determined by these criteria.
    c. Let m be the String value consisting of the digits of the decimal representation of n (in order, with no leading zeroes).
11. If $f \ne 0$, then
    a. Let a be the first code unit of m, and let b be the remaining f code units of m.
    b. Set m to the string-concatenation of a, **"."**, and b.
12. If $e = 0$, then
    a. Let c be **"+"**.
    b. Let d be **"0"**.
13. Else,
    a. If $e > 0$, let c be **"+"**.
    b. Else,
        i. Assert: $e < 0$.
        ii. Let c be **"-"**.
        iii. Set e to $-e$.
    c. Let d be the String value consisting of the digits of the decimal representation of e (in order, with no leading zeroes).
14. Set m to the string-concatenation of m, **"e"**, c, and d.
15. Return the string-concatenation of s and m.

NOTE For implementations that provide more accurate conversions than required by the rules above, it is recommended that the following alternative version of step 10.b.i be used as a guideline:

1. Let e, n, and f be integers such that $f \ge 0$, $10^f \le n < 10^{f+1}$, the Number value for $\mathbb{R}(n) \times 10_{\mathbb{R}}^{\mathbb{R}(e) - \mathbb{R}(f)}$ is x, and f is as small as possible. If there are multiple possibilities for n, choose the value of n for which $\mathbb{R}(n) \times 10_{\mathbb{R}}^{\mathbb{R}(e) - \mathbb{R}(f)}$ is closest in value to x. If there are two such possible values of n, choose the one that is even.

20.1.3.3 Number.prototype.toFixed (*fractionDigits*)

NOTE 1 **`toFixed`** returns a String containing this Number value represented in decimal fixed-point notation with *fractionDigits* digits after the decimal point. If *fractionDigits* is **undefined**, 0 is assumed.

The following steps are performed:

1. Let x be ? thisNumberValue(**this** value).
2. Let f be ? ToInteger(*fractionDigits*).
3. Assert: If *fractionDigits* is **undefined**, then f is 0.
4. If $f < 0$ or $f > 100$, throw a **RangeError** exception.
5. If x is **NaN**, return the String **"NaN"**.
6. Let s be the empty String.
7. If $x < 0$, then
   a. Set s to **"-"**.
   b. Set x to $-x$.
8. If $x \geq 10^{21}$, then
   a. Let m be ! ToString(x).
9. Else,
   a. Let n be an integer for which $\mathbb{R}(n) \div 10_{\mathbb{R}}^{\mathbb{R}(f)} - \mathbb{R}(x)$ is as close to zero as possible. If there are two such n, pick the larger n.
   b. If $n = 0$, let m be the String **"0"**. Otherwise, let m be the String value consisting of the digits of the decimal representation of n (in order, with no leading zeroes).
   c. If $f \neq 0$, then
      i. Let k be the length of m.
      ii. If $k \leq f$, then
         1. Let z be the String value consisting of $f + 1 - k$ occurrences of the code unit 0x0030 (DIGIT ZERO).
         2. Set m to the string-concatenation of z and m.
         3. Set k to $f + 1$.
      iii. Let a be the first $k - f$ code units of m, and let b be the remaining f code units of m.
      iv. Set m to the string-concatenation of a, **"."**, and b.
10. Return the string-concatenation of s and m.

NOTE 2 The output of **`toFixed`** may be more precise than **`toString`** for some values because toString only prints enough significant digits to distinguish the number from adjacent number values. For example,

`(1000000000000000128).toString()` returns **"1000000000000000100"**, while **`(1000000000000000128).toFixed(0)`** returns **"1000000000000000128"**.

20.1.3.4 Number.prototype.toLocaleString ([*reserved1* [, *reserved2*]])

An ECMAScript implementation that includes the ECMA-402 Internationalization API must implement the **`Number.prototype.toLocaleString`** method as specified in the ECMA-402 specification. If an ECMAScript implementation does not include the ECMA-402 API the following specification of the **`toLocaleString`** method is used.

Produces a String value that represents this Number value formatted according to the conventions of the host environment's current locale. This function is implementation-dependent, and it is permissible, but not encouraged, for it to return the same thing as **`toString`**.

The meanings of the optional parameters to this method are defined in the ECMA-402 specification; implementations that do not include ECMA-402 support must not use those parameter positions for anything else.

20.1.3.5 Number.prototype.toPrecision (*precision*)

Return a String containing this Number value represented either in decimal exponential notation with one digit before the significand's decimal point and *precision* - 1 digits after the significand's decimal point or in decimal fixed notation with *precision* significant digits. If *precision* is **undefined**, call ToString instead. Specifically, perform the following steps:

1. Let x be ? thisNumberValue(**this** value).
2. If *precision* is **undefined**, return ! ToString(x).
3. Let p be ? ToInteger(*precision*).
4. If x is **NaN**, return the String **"NaN"**.
5. Let s be the empty String.
6. If $x < 0$, then
   a. Set s to the code unit 0x002D (HYPHEN-MINUS).
   b. Set x to $-x$.
7. If $x = +\infty$, then
   a. Return the string-concatenation of s and **"Infinity"**.
8. If $p < 1$ or $p > 100$, throw a **RangeError** exception.
9. If $x = 0$, then
   a. Let m be the String value consisting of p occurrences of the code unit 0x0030 (DIGIT ZERO).
   b. Let e be 0.
10. Else,
    a. Let e and n be integers such that $10^{p-1} \leq n < 10^p$ and for which $\mathbb{R}(n) \times 10_{\mathbb{R}}^{\mathbb{R}(e) - \mathbb{R}(p) + 1_{\mathbb{R}}} - \mathbb{R}(x)$ is as close to zero as possible. If there are two such sets of e and n, pick the e and n for which $\mathbb{R}(n) \times 10_{\mathbb{R}}^{\mathbb{R}(e) - \mathbb{R}(p) + 1_{\mathbb{R}}}$ is larger.
    b. Let m be the String value consisting of the digits of the decimal representation of n (in order, with no leading zeroes).
    c. If $e < -6$ or $e \geq p$, then
       i. Assert: $e \neq 0$.
       ii. If $p \neq 1$, then
          1. Let a be the first code unit of m, and let b be the remaining $p - 1$ code units of m.
          2. Set m to the string-concatenation of a, **"."**, and b.
       iii. If $e > 0$, then
          1. Let c be the code unit 0x002B (PLUS SIGN).
       iv. Else,
          1. Assert: $e < 0$.
          2. Let c be the code unit 0x002D (HYPHEN-MINUS).
          3. Set e to $-e$.
       v. Let d be the String value consisting of the digits of the decimal representation of e (in order, with no leading zeroes).
       vi. Return the string-concatenation of s, m, the code unit 0x0065 (LATIN SMALL LETTER E), c, and

d.

11. If $e = p - 1$, return the string-concatenation of *s* and *m*.
12. If $e \geq 0$, then
    a. Set *m* to the string-concatenation of the first $e + 1$ code units of *m*, the code unit 0x002E (FULL STOP), and the remaining $p - (e + 1)$ code units of *m*.
13. Else,
    a. Set *m* to the string-concatenation of the code unit 0x0030 (DIGIT ZERO), the code unit 0x002E (FULL STOP), $-(e + 1)$ occurrences of the code unit 0x0030 (DIGIT ZERO), and the String *m*.
14. Return the string-concatenation of *s* and *m*.

20.1.3.6 Number.prototype.toString ([*radix*])

NOTE The optional *radix* should be an integer value in the inclusive range 2 to 36. If *radix* is **undefined** the Number 10 is used as the value of *radix*.

The following steps are performed:

1. Let *x* be ? thisNumberValue(**this** value).
2. If *radix* is **undefined**, let *radixNumber* be 10.
3. Else, let *radixNumber* be ? ToInteger(*radix*).
4. If *radixNumber* < 2 or *radixNumber* > 36, throw a **RangeError** exception.
5. If *radixNumber* = 10, return ! ToString(*x*).
6. Return the String representation of this Number value using the radix specified by *radixNumber*. Letters `a`-`z` are used for digits with values 10 through 35. The precise algorithm is implementation-dependent, however the algorithm should be a generalization of that specified in 6.1.6.1.20.

The `toString` function is not generic; it throws a **TypeError** exception if its **this** value is not a Number or a Number object. Therefore, it cannot be transferred to other kinds of objects for use as a method.

The **"length"** property of the `toString` method is 1.

20.1.3.7 Number.prototype.valueOf ( )

1. Return ? thisNumberValue(**this** value).

20.1.4 Properties of Number Instances

Number instances are ordinary objects that inherit properties from the Number prototype object. Number instances also have a [[NumberData]] internal slot. The [[NumberData]] internal slot is the Number value represented by this Number object.

20.2 BigInt Objects

20.2.1 The BigInt Constructor

The BigInt constructor:

- is the intrinsic object *%BigInt%*.
- is the initial value of the **"BigInt"** property of the global object.
- performs a type conversion when called as a function rather than as a constructor.
- is not intended to be used with the **`new`** operator or to be subclassed. It may be used as the value of an **`extends`** clause of a class definition but a **`super`** call to the **`BigInt`** constructor will cause an exception.

20.2.1.1 BigInt (*value*)

When **`BigInt`** is called with argument *value*, the following steps are taken:

1. If NewTarget is not **undefined**, throw a **TypeError** exception.
2. Let *prim* be ? ToPrimitive(*value*, hint Number).
3. If Type(*prim*) is Number, return ? NumberToBigInt(*prim*).
4. Otherwise, return ? ToBigInt(*value*).

20.2.1.1.1 Runtime Semantics: NumberToBigInt (*number*)

1. Assert: Type(*number*) is Number.
2. If IsInteger(*number*) is **false**, throw a **RangeError** exception.
3. Return the BigInt value that represents the mathematical value of *number*.

20.2.2 Properties of the BigInt Constructor

The value of the [[Prototype]] internal slot of the BigInt constructor is the intrinsic object %Function.prototype%.

The BigInt constructor has the following properties:

20.2.2.1 BigInt.asIntN (*bits*, *bigint*)

When the **`BigInt.asIntN`** function is called with two arguments *bits* and *bigint*, the following steps are taken:

1. Set *bits* to ? ToIndex(*bits*).
2. Set *bigint* to ? ToBigInt(*bigint*).
3. Let *mod* be the BigInt value that represents *bigint* modulo 2^{bits}.
4. If $mod \geq 2^{bits - 1}$, return $mod - 2^{bits}$; otherwise, return *mod*.

20.2.2.2 BigInt.asUintN (*bits*, *bigint*)

When the **`BigInt.asUintN`** function is called with two arguments *bits* and *bigint*, the following steps are taken:

1. Set *bits* to ? ToIndex(*bits*).
2. Set *bigint* to ? ToBigInt(*bigint*).
3. Return the BigInt value that represents *bigint* modulo 2^{bits}.

20.2.2.3 BigInt.prototype

This property has the attributes { [[Writable]]: **false**, [[Enumerable]]: **false**, [[Configurable]]: **false** }.

20.2.3 Properties of the BigInt Prototype Object

The BigInt prototype object:

- is an ordinary object.
- is not a BigInt object; it does not have a [[BigIntData]] internal slot.
- has a [[Prototype]] internal slot whose value is the intrinsic object %Object.prototype%.

The abstract operation *thisBigIntValue*(*value*) performs the following steps:

1. If Type(*value*) is BigInt, return *value*.
2. If Type(*value*) is Object and *value* has a [[BigIntData]] internal slot, then
    a. Assert: Type(*value*.[[BigIntData]]) is BigInt.
    b. Return *value*.[[BigIntData]].
3. Throw a **TypeError** exception.

The phrase "this BigInt value" within the specification of a method refers to the result returned by calling the abstract operation thisBigIntValue with the **this** value of the method invocation passed as the argument.

20.2.3.1 BigInt.prototype.constructor

The initial value of **`BigInt.prototype.constructor`** is the intrinsic object %BigInt%.

20.2.3.2 BigInt.prototype.toLocaleString ([*reserved1* [, *reserved2*]])

An ECMAScript implementation that includes the ECMA-402 Internationalization API must implement the **`BigInt.prototype.toLocaleString`** method as specified in the ECMA-402 specification. If an ECMAScript implementation does not include the ECMA-402 API the following specification of the **`toLocaleString`** method is used.

Produces a String value that represents this BigInt value formatted according to the conventions of the host environment's current locale. This function is implementation-dependent, and it is permissible, but not encouraged, for it to return the same thing as **`toString`**.

The meanings of the optional parameters to this method are defined in the ECMA-402 specification; implementations that do not include ECMA-402 support must not use those parameter positions for anything else.

20.2.3.3 BigInt.prototype.toString ([*radix*])

> NOTE The optional *radix* should be an integer value in the inclusive range 2 to 36. If *radix* not present or is **undefined** the Number 10 is used as the value of *radix*.

The following steps are performed:

1. Let *x* be ? thisBigIntValue(**this** value).
2. If *radix* is not present, let *radixNumber* be 10.
3. Else if *radix* is **undefined**, let *radixNumber* be 10.
4. Else, let *radixNumber* be ? ToInteger(*radix*).
5. If *radixNumber* < 2 or *radixNumber* > 36, throw a **RangeError** exception.
6. If *radixNumber* = 10, return ! ToString(*x*).

7. Return the String representation of this Number value using the radix specified by *radixNumber*. Letters **`a`**-**`z`** are used for digits with values 10 through 35. The precise algorithm is implementation-dependent, however the algorithm should be a generalization of that specified in 6.1.6.2.23.

The **`toString`** function is not generic; it throws a **TypeError** exception if its **this** value is not a BigInt or a BigInt object. Therefore, it cannot be transferred to other kinds of objects for use as a method.

20.2.3.4 BigInt.prototype.valueOf ( )

1. Return ? thisBigIntValue(**this** value).

20.2.3.5 BigInt.prototype [@@toStringTag]

The initial value of the @@toStringTag property is the String value **"BigInt"**.

This property has the attributes { [[Writable]]: **false**, [[Enumerable]]: **false**, [[Configurable]]: **true** }.

20.3 The Math Object

The Math object:

- is the intrinsic object *%Math%*.
- is the initial value of the **"Math"** property of the global object.
- is an ordinary object.
- has a [[Prototype]] internal slot whose value is %Object.prototype%.
- is not a function object.
- does not have a [[Construct]] internal method; it cannot be used as a constructor with the **`new`** operator.
- does not have a [[Call]] internal method; it cannot be invoked as a function.

NOTE In this specification, the phrase "the Number value for *x*" has a technical meaning defined in 6.1.6.1.

20.3.1 Value Properties of the Math Object

20.3.1.1 Math.E

The Number value for $e_{\mathbb{R}}$, the base of the natural logarithms, which is approximately 2.7182818284590452354.

This property has the attributes { [[Writable]]: **false**, [[Enumerable]]: **false**, [[Configurable]]: **false** }.

20.3.1.2 Math.LN10

The Number value for the natural logarithm of $10_{\mathbb{R}}$, which is approximately 2.302585092994046.

This property has the attributes { [[Writable]]: **false**, [[Enumerable]]: **false**, [[Configurable]]: **false** }.

20.3.1.3 Math.LN2

The Number value for the natural logarithm of $2_{\mathbb{R}}$, which is approximately 0.6931471805599453.

This property has the attributes { [[Writable]]: **false**, [[Enumerable]]: **false**, [[Configurable]]: **false** }.

20.3.1.4 Math.LOG10E

The Number value for the base-10 logarithm of $e_{\mathbb{R}}$, the base of the natural logarithms; this value is approximately 0.4342944819032518.

This property has the attributes { [[Writable]]: **false**, [[Enumerable]]: **false**, [[Configurable]]: **false** }.

> NOTE The value of **`Math.LOG10E`** is approximately the reciprocal of the value of **`Math.LN10`**.

20.3.1.5 Math.LOG2E

The Number value for the base-2 logarithm of $e_{\mathbb{R}}$, the base of the natural logarithms; this value is approximately 1.4426950408889634.

This property has the attributes { [[Writable]]: **false**, [[Enumerable]]: **false**, [[Configurable]]: **false** }.

> NOTE The value of **`Math.LOG2E`** is approximately the reciprocal of the value of **`Math.LN2`**.

20.3.1.6 Math.PI

The Number value for $\pi_{\mathbb{R}}$, the ratio of the circumference of a circle to its diameter, which is approximately 3.1415926535897932.

This property has the attributes { [[Writable]]: **false**, [[Enumerable]]: **false**, [[Configurable]]: **false** }.

20.3.1.7 Math.SQRT1_2

The Number value for the square root of $½_{\mathbb{R}}$, which is approximately 0.7071067811865476.

This property has the attributes { [[Writable]]: **false**, [[Enumerable]]: **false**, [[Configurable]]: **false** }.

> NOTE The value of **`Math.SQRT1_2`** is approximately the reciprocal of the value of **`Math.SQRT2`**.

20.3.1.8 Math.SQRT2

The Number value for the square root of $2_{\mathbb{R}}$, which is approximately 1.4142135623730951.

This property has the attributes { [[Writable]]: **false**, [[Enumerable]]: **false**, [[Configurable]]: **false** }.

20.3.1.9 Math [@@toStringTag]

The initial value of the @@toStringTag property is the String value **"Math"**.

This property has the attributes { [[Writable]]: **false**, [[Enumerable]]: **false**, [[Configurable]]: **true** }.

20.3.2 Function Properties of the Math Object

Each of the following **`Math`** object functions applies the ToNumber abstract operation to each of its arguments (in left-to-right order if there is more than one). If ToNumber returns an abrupt completion, that Completion Record is immediately returned. Otherwise, the function performs a computation on the resulting Number value(s). The value returned by each function is a Number.

In the function descriptions below, the symbols **NaN**, **-0**, **+0**, **-∞** and +∞ refer to the Number values described in 6.1.6.1.

> NOTE
>
> The behaviour of the functions **`acos`**, **`acosh`**, **`asin`**, **`asinh`**, **`atan`**, **`atanh`**, **`atan2`**, **`cbrt`**, **`cos`**, **`cosh`**, **`exp`**, **`expm1`**, **`hypot`**, **`log`**,**`log1p`**, **`log2`**, **`log10`**, **`pow`**, **`random`**, **`sin`**, **`sinh`**, **`sqrt`**, **`tan`**, and **`tanh`** is not precisely specified here except to require specific results for certain argument values that represent boundary cases of interest. For other argument values, these functions are intended to compute approximations to the results of familiar mathematical functions, but some latitude is allowed in the choice of approximation algorithms. The general intent is that an implementer should be able to use the same mathematical library for ECMAScript on a given hardware platform that is available to C programmers on that platform.
>
> Although the choice of algorithms is left to the implementation, it is recommended (but not specified by this standard) that implementations use the approximation algorithms for IEEE 754-2019 arithmetic contained in **`fdlibm`**, the freely distributable mathematical library from Sun Microsystems (http://www.netlib.org/fdlibm).

20.3.2.1 Math.abs (*x*)

Returns the absolute value of *x*; the result has the same magnitude as *x* but has positive sign.

- If *x* is **NaN**, the result is **NaN**.
- If *x* is **-0**, the result is **+0**.
- If *x* is **-∞**, the result is +∞.

20.3.2.2 Math.acos (*x*)

Returns an implementation-dependent approximation to the arc cosine of *x*. The result is expressed in radians and ranges from **+0** to +π.

- If *x* is **NaN**, the result is **NaN**.
- If *x* is greater than 1, the result is **NaN**.
- If *x* is less than -1, the result is **NaN**.
- If *x* is exactly 1, the result is **+0**.

20.3.2.3 Math.acosh (*x*)

Returns an implementation-dependent approximation to the inverse hyperbolic cosine of *x*.

- If *x* is **NaN**, the result is **NaN**.
- If x is less than 1, the result is **NaN**.
- If x is 1, the result is **+0**.

- If x is +∞, the result is +∞.

20.3.2.4 Math.asin (x)

Returns an implementation-dependent approximation to the arc sine of x. The result is expressed in radians and ranges from -π / 2 to +π / 2.

- If x is **NaN**, the result is **NaN**.
- If x is greater than 1, the result is **NaN**.
- If x is less than -1, the result is **NaN**.
- If x is **+0**, the result is **+0**.
- If x is **-0**, the result is **-0**.

20.3.2.5 Math.asinh (x)

Returns an implementation-dependent approximation to the inverse hyperbolic sine of x.

- If x is **NaN**, the result is **NaN**.
- If x is **+0**, the result is **+0**.
- If x is **-0**, the result is **-0**.
- If x is +∞, the result is +∞.
- If x is **-**∞, the result is **-**∞.

20.3.2.6 Math.atan (x)

Returns an implementation-dependent approximation to the arc tangent of x. The result is expressed in radians and ranges from -π / 2 to +π / 2.

- If x is **NaN**, the result is **NaN**.
- If x is **+0**, the result is **+0**.
- If x is **-0**, the result is **-0**.
- If x is +∞, the result is an implementation-dependent approximation to +π / 2.
- If x is **-**∞, the result is an implementation-dependent approximation to -π / 2.

20.3.2.7 Math.atanh (x)

Returns an implementation-dependent approximation to the inverse hyperbolic tangent of x.

- If x is **NaN**, the result is **NaN**.
- If x is less than -1, the result is **NaN**.
- If x is greater than 1, the result is **NaN**.
- If x is -1, the result is **-**∞.
- If x is +1, the result is +∞.
- If x is **+0**, the result is **+0**.
- If x is **-0**, the result is **-0**.

20.3.2.8 Math.atan2 (y, x)

Returns an implementation-dependent approximation to the arc tangent of the quotient y / x of the arguments y and x, where the signs of y and x are used to determine the quadrant of the result. Note that it is intentional and traditional

for the two-argument arc tangent function that the argument named *y* be first and the argument named *x* be second. The result is expressed in radians and ranges from -π to +π.

- If either *x* or *y* is **NaN**, the result is **NaN**.
- If *y* > 0 and *x* is **+0**, the result is an implementation-dependent approximation to +π / 2.
- If *y* > 0 and *x* is **-0**, the result is an implementation-dependent approximation to +π / 2.
- If *y* is **+0** and *x* > 0, the result is **+0**.
- If *y* is **+0** and *x* is **+0**, the result is **+0**.
- If *y* is **+0** and *x* is **-0**, the result is an implementation-dependent approximation to +π.
- If *y* is **+0** and *x* < 0, the result is an implementation-dependent approximation to +π.
- If *y* is **-0** and *x* > 0, the result is **-0**.
- If *y* is **-0** and *x* is **+0**, the result is **-0**.
- If *y* is **-0** and *x* is **-0**, the result is an implementation-dependent approximation to -π.
- If *y* is **-0** and *x* < 0, the result is an implementation-dependent approximation to -π.
- If *y* < 0 and *x* is **+0**, the result is an implementation-dependent approximation to -π / 2.
- If *y* < 0 and *x* is **-0**, the result is an implementation-dependent approximation to -π / 2.
- If *y* > 0 and *y* is finite and *x* is +∞, the result is **+0**.
- If *y* > 0 and *y* is finite and *x* is **-**∞, the result is an implementation-dependent approximation to +π.
- If *y* < 0 and *y* is finite and *x* is +∞, the result is **-0**.
- If *y* < 0 and *y* is finite and *x* is **-**∞, the result is an implementation-dependent approximation to -π.
- If *y* is +∞ and *x* is finite, the result is an implementation-dependent approximation to +π / 2.
- If *y* is **-**∞ and *x* is finite, the result is an implementation-dependent approximation to -π / 2.
- If *y* is +∞ and *x* is +∞, the result is an implementation-dependent approximation to +π / 4.
- If *y* is +∞ and *x* is **-**∞, the result is an implementation-dependent approximation to +3π / 4.
- If *y* is **-**∞ and *x* is +∞, the result is an implementation-dependent approximation to -π / 4.
- If *y* is **-**∞ and *x* is **-**∞, the result is an implementation-dependent approximation to -3π / 4.

20.3.2.9 Math.cbrt (*x*)

Returns an implementation-dependent approximation to the cube root of *x*.

- If *x* is **NaN**, the result is **NaN**.
- If *x* is **+0**, the result is **+0**.
- If *x* is **-0**, the result is **-0**.
- If *x* is +∞, the result is +∞.
- If *x* is **-**∞, the result is **-**∞.

20.3.2.10 Math.ceil (*x*)

Returns the smallest (closest to **-**∞) Number value that is not less than *x* and is an integer. If *x* is already an integer, the result is *x*.

- If *x* is **NaN**, the result is **NaN**.
- If *x* is **+0**, the result is **+0**.
- If *x* is **-0**, the result is **-0**.
- If *x* is +∞, the result is +∞.
- If *x* is **-**∞, the result is **-**∞.
- If *x* is less than 0 but greater than -1, the result is **-0**.

The value of **`Math.ceil(x)`** is the same as the value of **`-Math.floor(-x)`**.

20.3.2.11 Math.clz32 (*x*)

When **`Math.clz32`** is called with one argument *x*, the following steps are taken:

1. Let *n* be ? ToUint32(*x*).
2. Let *p* be the number of leading zero bits in the 32-bit binary representation of *n*.
3. Return *p*.

> NOTE If *n* is 0, *p* will be 32. If the most significant bit of the 32-bit binary encoding of *n* is 1, *p* will be 0.

20.3.2.12 Math.cos (*x*)

Returns an implementation-dependent approximation to the cosine of *x*. The argument is expressed in radians.

- If *x* is **NaN**, the result is **NaN**.
- If *x* is **+0**, the result is 1.
- If *x* is **-0**, the result is 1.
- If *x* is +∞, the result is **NaN**.
- If *x* is -∞, the result is **NaN**.

20.3.2.13 Math.cosh (*x*)

Returns an implementation-dependent approximation to the hyperbolic cosine of *x*.

- If *x* is **NaN**, the result is **NaN**.
- If *x* is **+0**, the result is 1.
- If *x* is **-0**, the result is 1.
- If *x* is +∞, the result is +∞.
- If *x* is -∞, the result is +∞.

> NOTE The value of **`Math.cosh(x)`** is the same as the value of **`(Math.exp(x) + Math.exp(-x)) / 2`**.

20.3.2.14 Math.exp (*x*)

Returns an implementation-dependent approximation to the exponential function of *x* (*e* raised to the power of *x*, where *e* is the base of the natural logarithms).

- If *x* is **NaN**, the result is **NaN**.
- If *x* is **+0**, the result is 1.
- If *x* is **-0**, the result is 1.
- If *x* is +∞, the result is +∞.
- If *x* is -∞, the result is **+0**.

20.3.2.15 Math.expm1 (*x*)

Returns an implementation-dependent approximation to subtracting 1 from the exponential function of *x* (*e* raised to the power of *x*, where *e* is the base of the natural logarithms). The result is computed in a way that is accurate even when the value of x is close 0.

- If *x* is **NaN**, the result is **NaN**.
- If *x* is **+0**, the result is **+0**.
- If *x* is **-0**, the result is **-0**.
- If *x* is +∞, the result is +∞.
- If *x* is -∞, the result is -1.

20.3.2.16 Math.floor (*x*)

Returns the greatest (closest to +∞) Number value that is not greater than *x* and is an integer. If *x* is already an integer, the result is *x*.

- If *x* is **NaN**, the result is **NaN**.
- If *x* is **+0**, the result is **+0**.
- If *x* is **-0**, the result is **-0**.
- If *x* is +∞, the result is +∞.
- If *x* is -∞, the result is -∞.
- If *x* is greater than 0 but less than 1, the result is **+0**.

NOTE The value of **`Math.floor(x)`** is the same as the value of **`-Math.ceil(-x)`**.

20.3.2.17 Math.fround (*x*)

When **`Math.fround`** is called with argument *x*, the following steps are taken:

1. If *x* is **NaN**, return **NaN**.
2. If *x* is one of **+0**, **-0**, +∞, -∞, return *x*.
3. Let *x32* be the result of converting *x* to a value in IEEE 754-2019 binary32 format using roundTiesToEven mode.
4. Let *x64* be the result of converting *x32* to a value in IEEE 754-2019 binary64 format.
5. Return the ECMAScript Number value corresponding to *x64*.

20.3.2.18 Math.hypot (*value1*, *value2*, ...*values*)

`Math.hypot` returns an implementation-dependent approximation of the square root of the sum of squares of its arguments.

- If no arguments are passed, the result is **+0**.
- If any argument is +∞, the result is +∞.
- If any argument is -∞, the result is +∞.
- If no argument is +∞ or -∞, and any argument is **NaN**, the result is **NaN**.
- If all arguments are either **+0** or **-0**, the result is **+0**.

NOTE Implementations should take care to avoid the loss of precision from overflows and underflows that are prone to occur in naive implementations when this function is called with two or more arguments.

20.3.2.19 Math.imul (*x*, *y*)

When **`Math.imul`** is called with arguments *x* and *y*, the following steps are taken:

1. Let *a* be ? ToUint32(*x*).
2. Let *b* be ? ToUint32(*y*).
3. Let *product* be (*a* × *b*) modulo 2^{32}.
4. If *product* ≥ 2^{31}, return *product* - 2^{32}; otherwise return *product*.

20.3.2.20 Math.log (*x*)

Returns an implementation-dependent approximation to the natural logarithm of *x*.

- If *x* is **NaN**, the result is **NaN**.
- If *x* is less than 0, the result is **NaN**.
- If *x* is **+0** or **-0**, the result is **-∞**.
- If *x* is 1, the result is **+0**.
- If *x* is +∞, the result is +∞.

20.3.2.21 Math.log1p (*x*)

Returns an implementation-dependent approximation to the natural logarithm of 1 + *x*. The result is computed in a way that is accurate even when the value of x is close to zero.

- If *x* is **NaN**, the result is **NaN**.
- If *x* is less than -1, the result is **NaN**.
- If x is -1, the result is **-∞**.
- If *x* is **+0**, the result is **+0**.
- If *x* is **-0**, the result is **-0**.
- If *x* is +∞, the result is +∞.

20.3.2.22 Math.log10 (*x*)

Returns an implementation-dependent approximation to the base 10 logarithm of *x*.

- If *x* is **NaN**, the result is **NaN**.
- If *x* is less than 0, the result is **NaN**.
- If *x* is **+0**, the result is **-∞**.
- If *x* is **-0**, the result is **-∞**.
- If *x* is 1, the result is **+0**.
- If *x* is +∞, the result is +∞.

20.3.2.23 Math.log2 (*x*)

Returns an implementation-dependent approximation to the base 2 logarithm of *x*.

- If *x* is **NaN**, the result is **NaN**.
- If *x* is less than 0, the result is **NaN**.
- If *x* is **+0**, the result is **-∞**.
- If *x* is **-0**, the result is **-∞**.

- If *x* is 1, the result is **+0**.
- If *x* is +∞, the result is +∞.

20.3.2.24 Math.max (*value1*, *value2*, ...*values*)

Given zero or more arguments, calls ToNumber on each of the arguments and returns the largest of the resulting values.

- If no arguments are given, the result is **-∞**.
- If any value is **NaN**, the result is **NaN**.
- The comparison of values to determine the largest value is done using the Abstract Relational Comparison algorithm except that **+0** is considered to be larger than **-0**.

20.3.2.25 Math.min (*value1*, *value2*, ...*values*)

Given zero or more arguments, calls ToNumber on each of the arguments and returns the smallest of the resulting values.

- If no arguments are given, the result is +∞.
- If any value is **NaN**, the result is **NaN**.
- The comparison of values to determine the smallest value is done using the Abstract Relational Comparison algorithm except that **+0** is considered to be larger than **-0**.

20.3.2.26 Math.pow (*base*, *exponent*)

1. Set *base* to ? ToNumber(*base*).
2. Set *exponent* to ? ToNumber(*exponent*).
3. Return ! Number::exponentiate(*base*, *exponent*).

20.3.2.27 Math.random ( )

Returns a Number value with positive sign, greater than or equal to 0 but less than 1, chosen randomly or pseudo randomly with approximately uniform distribution over that range, using an implementation-dependent algorithm or strategy. This function takes no arguments.

Each `Math.random` function created for distinct realms must produce a distinct sequence of values from successive calls.

20.3.2.28 Math.round (*x*)

Returns the Number value that is closest to *x* and is an integer. If two integers are equally close to *x*, then the result is the Number value that is closer to +∞. If *x* is already an integer, the result is *x*.

- If *x* is **NaN**, the result is **NaN**.
- If *x* is **+0**, the result is **+0**.
- If *x* is **-0**, the result is **-0**.
- If *x* is +∞, the result is +∞.
- If *x* is **-∞**, the result is **-∞**.
- If *x* is greater than 0 but less than 0.5, the result is **+0**.

- If *x* is less than 0 but greater than or equal to -0.5, the result is **-0**.

NOTE 1 `Math.round(3.5)` returns 4, but `Math.round(-3.5)` returns -3.

NOTE 2 The value of `Math.round(x)` is not always the same as the value of `Math.floor(x + 0.5)`. When `x` is **-0** or is less than 0 but greater than or equal to -0.5, `Math.round(x)` returns **-0**, but `Math.floor(x + 0.5)` returns +0. `Math.round(x)` may also differ from the value of `Math.floor(x + 0.5)`because of internal rounding when computing `x + 0.5`.

20.3.2.29 Math.sign (*x*)

Returns the sign of *x*, indicating whether *x* is positive, negative, or zero.

- If *x* is **NaN**, the result is **NaN**.
- If *x* is **-0**, the result is **-0**.
- If *x* is **+0**, the result is **+0**.
- If *x* is negative and not **-0**, the result is -1.
- If *x* is positive and not **+0**, the result is +1.

20.3.2.30 Math.sin (*x*)

Returns an implementation-dependent approximation to the sine of *x*. The argument is expressed in radians.

- If *x* is **NaN**, the result is **NaN**.
- If *x* is **+0**, the result is **+0**.
- If *x* is **-0**, the result is **-0**.
- If *x* is +∞ or -∞, the result is **NaN**.

20.3.2.31 Math.sinh (*x*)

Returns an implementation-dependent approximation to the hyperbolic sine of *x*.

- If *x* is **NaN**, the result is **NaN**.
- If *x* is **+0**, the result is **+0**.
- If *x* is **-0**, the result is **-0**.
- If *x* is +∞, the result is +∞.
- If *x* is -∞, the result is -∞.

NOTE The value of `Math.sinh(x)` is the same as the value of `(Math.exp(x) - Math.exp(-x)) / 2`.

20.3.2.32 Math.sqrt (*x*)

Returns an implementation-dependent approximation to the square root of *x*.

- If *x* is **NaN**, the result is **NaN**.

- If x is less than 0, the result is **NaN**.
- If x is **+0**, the result is **+0**.
- If x is **-0**, the result is **-0**.
- If x is +∞, the result is +∞.

20.3.2.33 Math.tan (x)

Returns an implementation-dependent approximation to the tangent of x. The argument is expressed in radians.

- If x is **NaN**, the result is **NaN**.
- If x is **+0**, the result is **+0**.
- If x is **-0**, the result is **-0**.
- If x is +∞ or -∞, the result is **NaN**.

20.3.2.34 Math.tanh (x)

Returns an implementation-dependent approximation to the hyperbolic tangent of x.

- If x is **NaN**, the result is **NaN**.
- If x is **+0**, the result is **+0**.
- If x is **-0**, the result is **-0**.
- If x is +∞, the result is +1.
- If x is -∞, the result is -1.

NOTE The value of **`Math.tanh(x)`** is the same as the value of **`(Math.exp(x) - Math.exp(-x)) / (Math.exp(x) + Math.exp(-x))`**.

20.3.2.35 Math.trunc (x)

Returns the integral part of the number x, removing any fractional digits. If x is already an integer, the result is x.

- If x is **NaN**, the result is **NaN**.
- If x is **-0**, the result is **-0**.
- If x is **+0**, the result is **+0**.
- If x is +∞, the result is +∞.
- If x is -∞, the result is -∞.
- If x is greater than 0 but less than 1, the result is **+0**.
- If x is less than 0 but greater than -1, the result is **-0**.

20.4 Date Objects

20.4.1 Overview of Date Objects and Definitions of Abstract Operations

The following functions are abstract operations that operate on time values (defined in 20.4.1.1). Note that, in every case, if any argument to one of these functions is **NaN**, the result will be **NaN**.

20.4.1.1 Time Values and Time Range

Time measurement in ECMAScript is analogous to time measurement in POSIX, in particular sharing definition in terms of the proleptic Gregorian calendar, an epoch of midnight at the beginning of 01 January, 1970 UTC, and an accounting of every day as comprising exactly 86,400 seconds (each of which is 1000 milliseconds long).

An ECMAScript *time value* is a Number, either a finite integer representing an instant in time to millisecond precision or **NaN** representing no specific instant. A time value that is a multiple of 24 × 60 × 60 × 1000 = 86,400,000 (i.e., is equal to 86,400,000 × d for some integer d) represents the instant at the start of the UTC day that follows the epoch by d whole UTC days (preceding the epoch for negative d). Every other finite time value t is defined relative to the greatest preceding time value s that is such a multiple, and represents the instant that occurs within the same UTC day as s but follows it by $t - s$ milliseconds.

Time values do not account for UTC leap seconds—there are no time values representing instants within positive leap seconds, and there are time values representing instants removed from the UTC timeline by negative leap seconds. However, the definition of time values nonetheless yields piecewise alignment with UTC, with discontinuities only at leap second boundaries and zero difference outside of leap seconds.

A Number can exactly represent all integers from -9,007,199,254,740,992 to 9,007,199,254,740,992 (20.1.2.8 and 20.1.2.6). A time value supports a slightly smaller range of -8,640,000,000,000,000 to 8,640,000,000,000,000 milliseconds. This yields a supported time value range of exactly -100,000,000 days to 100,000,000 days relative to midnight at the beginning of 01 January, 1970 UTC.

The exact moment of midnight at the beginning of 01 January, 1970 UTC is represented by the time value **+0**.

NOTE The 400 year cycle of the proleptic Gregorian calendar contains 97 leap years. This yields an average of 365.2425 days per year, which is 31,556,952,000 milliseconds. Therefore, the maximum range a Number could represent exactly with millisecond precision is approximately -285,426 to 285,426 years relative to 1970. The smaller range supported by a time value as specified in this section is approximately -273,790 to 273,790 years relative to 1970.

20.4.1.2 Day Number and Time within Day

A given time value t belongs to day number

Day(t) = floor(t / msPerDay)

where the number of milliseconds per day is

msPerDay = 86400000

The remainder is called the time within the day:

TimeWithinDay(t) = t modulo msPerDay

20.4.1.3 Year Number

ECMAScript uses a proleptic Gregorian calendar to map a day number to a year number and to determine the month and date within that year. In this calendar, leap years are precisely those which are (divisible by 4) and ((not divisible by 100) or (divisible by 400)). The number of days in year number y is therefore defined by

DaysInYear(y)

= 365 if (y modulo 4) ≠ 0
= 366 if (y modulo 4) = 0 and (y modulo 100) ≠ 0
= 365 if (y modulo 100) = 0 and (y modulo 400) ≠ 0
= 366 if (y modulo 400) = 0

All non-leap years have 365 days with the usual number of days per month and leap years have an extra day in February. The day number of the first day of year y is given by:

DayFromYear(y) = 365 × (y - 1970) + floor((y - 1969) / 4) - floor((y - 1901) / 100) + floor((y - 1601) / 400)

The time value of the start of a year is:

TimeFromYear(y) = msPerDay × DayFromYear(y)

A time value determines a year by:

YearFromTime(t) = the largest integer y (closest to positive infinity) such that TimeFromYear(y) ≤ t

The leap-year function is 1 for a time within a leap year and otherwise is zero:

InLeapYear(t)
= 0 if DaysInYear(YearFromTime(t)) = 365
= 1 if DaysInYear(YearFromTime(t)) = 366

20.4.1.4 Month Number

Months are identified by an integer in the range 0 to 11, inclusive. The mapping MonthFromTime(t) from a time value t to a month number is defined by:

MonthFromTime(t)
= 0 if 0 ≤ DayWithinYear(t) < 31
= 1 if 31 ≤ DayWithinYear(t) < 59 + InLeapYear(t)
= 2 if 59 + InLeapYear(t) ≤ DayWithinYear(t) < 90 + InLeapYear(t)
= 3 if 90 + InLeapYear(t) ≤ DayWithinYear(t) < 120 + InLeapYear(t)
= 4 if 120 + InLeapYear(t) ≤ DayWithinYear(t) < 151 + InLeapYear(t)
= 5 if 151 + InLeapYear(t) ≤ DayWithinYear(t) < 181 + InLeapYear(t)
= 6 if 181 + InLeapYear(t) ≤ DayWithinYear(t) < 212 + InLeapYear(t)
= 7 if 212 + InLeapYear(t) ≤ DayWithinYear(t) < 243 + InLeapYear(t)
= 8 if 243 + InLeapYear(t) ≤ DayWithinYear(t) < 273 + InLeapYear(t)
= 9 if 273 + InLeapYear(t) ≤ DayWithinYear(t) < 304 + InLeapYear(t)
= 10 if 304 + InLeapYear(t) ≤ DayWithinYear(t) < 334 + InLeapYear(t)
= 11 if 334 + InLeapYear(t) ≤ DayWithinYear(t) < 365 + InLeapYear(t)

where

DayWithinYear(t) = Day(t) - DayFromYear(YearFromTime(t))

A month value of 0 specifies January; 1 specifies February; 2 specifies March; 3 specifies April; 4 specifies May; 5 specifies June; 6 specifies July; 7 specifies August; 8 specifies September; 9 specifies October; 10 specifies November; and 11 specifies December. Note that MonthFromTime(0) = 0, corresponding to Thursday, 01 January, 1970.

20.4.1.5 Date Number

A date number is identified by an integer in the range 1 through 31, inclusive. The mapping DateFromTime(t) from a time value t to a date number is defined by:

DateFromTime(t)
= DayWithinYear(t) + 1 if MonthFromTime(t) = 0
= DayWithinYear(t) - 30 if MonthFromTime(t) = 1
= DayWithinYear(t) - 58 - InLeapYear(t) if MonthFromTime(t) = 2
= DayWithinYear(t) - 89 - InLeapYear(t) if MonthFromTime(t) = 3
= DayWithinYear(t) - 119 - InLeapYear(t) if MonthFromTime(t) = 4
= DayWithinYear(t) - 150 - InLeapYear(t) if MonthFromTime(t) = 5
= DayWithinYear(t) - 180 - InLeapYear(t) if MonthFromTime(t) = 6
= DayWithinYear(t) - 211 - InLeapYear(t) if MonthFromTime(t) = 7
= DayWithinYear(t) - 242 - InLeapYear(t) if MonthFromTime(t) = 8
= DayWithinYear(t) - 272 - InLeapYear(t) if MonthFromTime(t) = 9
= DayWithinYear(t) - 303 - InLeapYear(t) if MonthFromTime(t) = 10
= DayWithinYear(t) - 333 - InLeapYear(t) if MonthFromTime(t) = 11

20.4.1.6 Week Day

The weekday for a particular time value t is defined as

WeekDay(t) = (Day(t) + 4) modulo 7

A weekday value of 0 specifies Sunday; 1 specifies Monday; 2 specifies Tuesday; 3 specifies Wednesday; 4 specifies Thursday; 5 specifies Friday; and 6 specifies Saturday. Note that WeekDay(0) = 4, corresponding to Thursday, 01 January, 1970.

20.4.1.7 LocalTZA (*t*, *isUTC*)

LocalTZA(t, *isUTC*) is an implementation-defined algorithm that returns the local time zone adjustment, or offset, in milliseconds. The local political rules for standard time and daylight saving time in effect at t should be used to determine the result in the way specified in this section.

When *isUTC* is true, LocalTZA(t_{UTC}, true) should return the offset of the local time zone from UTC measured in milliseconds at time represented by time value t_{UTC}. When the result is added to t_{UTC}, it should yield the corresponding Number t_{local}.

When *isUTC* is false, LocalTZA(t_{local}, false) should return the offset of the local time zone from UTC measured in milliseconds at local time represented by Number t_{local}. When the result is subtracted from t_{local}, it should yield the corresponding time value t_{UTC}.

Input t is nominally a time value but may be any Number value. This can occur when *isUTC* is false and t_{local} represents a time value that is already offset outside of the time value range at the range boundaries. The algorithm must not limit t_{local} to the time value range, so that such inputs are supported.

When t_{local} represents local time repeating multiple times at a negative time zone transition (e.g. when the daylight saving time ends or the time zone offset is decreased due to a time zone rule change) or skipped local time at a positive time zone transitions (e.g. when the daylight saving time starts or the time zone offset is increased due to a

time zone rule change), t_{local} must be interpreted using the time zone offset before the transition.

If an implementation does not support a conversion described above or if political rules for time t are not available within the implementation, the result must be 0.

NOTE It is recommended that implementations use the time zone information of the IANA Time Zone Database https://www.iana.org/time-zones/.

1:30 AM on November 5, 2017 in America/New_York is repeated twice (fall backward), but it must be interpreted as 1:30 AM UTC-04 instead of 1:30 AM UTC-05.
LocalTZA(TimeClip(MakeDate(MakeDay(2017, 10, 5), MakeTime(1, 30, 0, 0))), false) is -4 × msPerHour.

2:30 AM on March 12, 2017 in America/New_York does not exist, but it must be interpreted as 2:30 AM UTC-05 (equivalent to 3:30 AM UTC-04).
LocalTZA(TimeClip(MakeDate(MakeDay(2017, 2, 12), MakeTime(2, 30, 0, 0))), false) is -5 × msPerHour.

Local time zone offset values may be positive *or* negative.

20.4.1.8 LocalTime (*t*)

The abstract operation LocalTime with argument t converts t from UTC to local time by performing the following steps:

1. Return t + LocalTZA(t, **true**).

NOTE Two different input time values t_{UTC} are converted to the same local time t_{local} at a negative time zone transition when there are repeated times (e.g. the daylight saving time ends or the time zone adjustment is decreased.).

LocalTime(UTC(t_{local})) is not necessarily always equal to t_{local}. Correspondingly, UTC(LocalTime(t_{UTC})) is not necessarily always equal to t_{UTC}.

20.4.1.9 UTC (*t*)

The abstract operation UTC with argument t converts t from local time to UTC by performing the following steps:

1. Return t - LocalTZA(t, **false**).

NOTE UTC(LocalTime(t_{UTC})) is not necessarily always equal to t_{UTC}. Correspondingly, LocalTime(UTC(t_{local})) is not necessarily always equal to t_{local}.

20.4.1.10 Hours, Minutes, Second, and Milliseconds

The following abstract operations are useful in decomposing time values:

HourFromTime(t) = floor(t / msPerHour) modulo HoursPerDay

MinFromTime(t) = floor(t / msPerMinute) modulo MinutesPerHour
SecFromTime(t) = floor(t / msPerSecond) modulo SecondsPerMinute
msFromTime(t) = t modulo msPerSecond

where

HoursPerDay = 24
MinutesPerHour = 60
SecondsPerMinute = 60
msPerSecond = 1000
msPerMinute = 60000 = msPerSecond × SecondsPerMinute
msPerHour = 3600000 = msPerMinute × MinutesPerHour

20.4.1.11 MakeTime (*hour*, *min*, *sec*, *ms*)

The abstract operation MakeTime calculates a number of milliseconds from its four arguments, which must be ECMAScript Number values. This operator functions as follows:

1. If *hour* is not finite or *min* is not finite or *sec* is not finite or *ms* is not finite, return **NaN**.
2. Let h be ! ToInteger(*hour*).
3. Let m be ! ToInteger(*min*).
4. Let s be ! ToInteger(*sec*).
5. Let *milli* be ! ToInteger(*ms*).
6. Let t be h ***** msPerHour **+** m ***** msPerMinute **+** s ***** msPerSecond **+** *milli*, performing the arithmetic according to IEEE 754-2019 rules (that is, as if using the ECMAScript operators ***** and **+**).
7. Return t.

20.4.1.12 MakeDay (*year*, *month*, *date*)

The abstract operation MakeDay calculates a number of days from its three arguments, which must be ECMAScript Number values. This operator functions as follows:

1. If *year* is not finite or *month* is not finite or *date* is not finite, return **NaN**.
2. Let y be ! ToInteger(*year*).
3. Let m be ! ToInteger(*month*).
4. Let dt be ! ToInteger(*date*).
5. Let ym be y + floor(m / 12).
6. Let mn be m modulo 12.
7. Find a value t such that YearFromTime(t) is ym and MonthFromTime(t) is mn and DateFromTime(t) is 1; but if this is not possible (because some argument is out of range), return **NaN**.
8. Return Day(t) + dt - 1.

20.4.1.13 MakeDate (*day*, *time*)

The abstract operation MakeDate calculates a number of milliseconds from its two arguments, which must be ECMAScript Number values. This operator functions as follows:

1. If *day* is not finite or *time* is not finite, return **NaN**.
2. Return *day* × msPerDay + *time*.

20.4.1.14 TimeClip (*time*)

The abstract operation TimeClip calculates a number of milliseconds from its argument, which must be an ECMAScript Number value. This operator functions as follows:

1. If *time* is not finite, return **NaN**.
2. If abs(*time*) > 8.64×10^{15}, return **NaN**.
3. Return ! ToInteger(*time*).

NOTE The point of step 4 is that an implementation is permitted a choice of internal representations of time values, for example as a 64-bit signed integer or as a 64-bit floating-point value. Depending on the implementation, this internal representation may or may not distinguish **-0** and **+0**.

20.4.1.15 Date Time String Format

ECMAScript defines a string interchange format for date-times based upon a simplification of the ISO 8601 calendar date extended format. The format is as follows: **`YYYY-MM-DDTHH:mm:ss.sssZ`**

Where the elements are as follows:

`YYYY`	is the year in the proleptic Gregorian calendar as four decimal digits from 0000 to 9999, or as an expanded year of **"+"** or **"-"** followed by six decimal digits.
`-`	**"-"** (hyphen) appears literally twice in the string.
`MM`	is the month of the year as two decimal digits from 01 (January) to 12 (December).
`DD`	is the day of the month as two decimal digits from 01 to 31.
`T`	**"T"** appears literally in the string, to indicate the beginning of the time element.
`HH`	is the number of complete hours that have passed since midnight as two decimal digits from 00 to 24.
`:`	**":"** (colon) appears literally twice in the string.
`mm`	is the number of complete minutes since the start of the hour as two decimal digits from 00 to 59.
`ss`	is the number of complete seconds since the start of the minute as two decimal digits from 00 to 59.
`.`	**"."** (dot) appears literally in the string.
`sss`	is the number of complete milliseconds since the start of the second as three decimal digits.
`Z`	is the UTC offset representation specified as **"Z"** (for UTC with no offset) or an offset of either **"+"** or **"-"** followed by a time expression **`HH:mm`** (indicating local time ahead of or behind UTC, respectively)

This format includes date-only forms:

```
YYYY
YYYY-MM
YYYY-MM-DD
```

It also includes “date-time” forms that consist of one of the above date-only forms immediately followed by one of the following time forms with an optional UTC offset representation appended:

```
THH:mm
THH:mm:ss
THH:mm:ss.sss
```

A string containing out-of-bounds or nonconforming elements is not a valid instance of this format.

NOTE 1 As every day both starts and ends with midnight, the two notations **`00:00`** and **`24:00`** are available to distinguish the two midnights that can be associated with one date. This means that the following two notations refer to exactly the same point in time: **`1995-02-04T24:00`** and **`1995-02-05T00:00`**. This interpretation of the latter form as "end of a calendar day" is consistent with ISO 8601, even though that specification reserves it for describing time intervals and does not permit it within representations of single points in time.

NOTE 2 There exists no international standard that specifies abbreviations for civil time zones like CET, EST, etc. and sometimes the same abbreviation is even used for two very different time zones. For this reason, both ISO 8601 and this format specify numeric representations of time zone offsets.

20.4.1.15.1 Expanded Years

Covering the full time value range of approximately 273,790 years forward or backward from 01 January, 1970 (20.4.1.1) requires representing years before 0 or after 9999. ISO 8601 permits expansion of the year representation, but only by mutual agreement of the partners in information interchange. In the simplified ECMAScript format, such an expanded year representation shall have 6 digits and is always prefixed with a + or - sign. The year 0 is considered positive and hence prefixed with a + sign. Strings matching the Date Time String Format with expanded years representing instants in time outside the range of a time value are treated as unrecognizable by **`Date.parse`** and cause that function to return **NaN** without falling back to implementation-specific behaviour or heuristics.

NOTE Examples of date-time values with expanded years:

-271821-04-20T00:00:00Z	271822 B.C.
-000001-01-01T00:00:00Z	2 B.C.
+000000-01-01T00:00:00Z	1 B.C.
+000001-01-01T00:00:00Z	1 A.D.
+001970-01-01T00:00:00Z	1970 A.D.
+002009-12-15T00:00:00Z	2009 A.D.
+275760-09-13T00:00:00Z	275760 A.D.

20.4.2 The Date Constructor

The Date constructor:

- is the intrinsic object *%Date%*.
- is the initial value of the **"Date"** property of the global object.
- creates and initializes a new Date object when called as a constructor.
- returns a String representing the current time (UTC) when called as a function rather than as a constructor.
- is a single function whose behaviour is overloaded based upon the number and types of its arguments.
- is designed to be subclassable. It may be used as the value of an **`extends`** clause of a class definition. Subclass constructors that intend to inherit the specified **`Date`** behaviour must include a **`super`** call to the **`Date`**

constructor to create and initialize the subclass instance with a [[DateValue]] internal slot.

- has a **"length"** property whose value is 7.

20.4.2.1 Date (*year*, *month* [, *date* [, *hours* [, *minutes* [, *seconds* [, *ms*]]]]])

This description applies only if the Date constructor is called with at least two arguments.

When the **`Date`** function is called, the following steps are taken:

1. Let *numberOfArgs* be the number of arguments passed to this function call.
2. Assert: *numberOfArgs* ≥ 2.
3. If NewTarget is **undefined**, then
    a. Let *now* be the Number that is the time value (UTC) identifying the current time.
    b. Return ToDateString(*now*).
4. Else,
    a. Let *y* be ? ToNumber(*year*).
    b. Let *m* be ? ToNumber(*month*).
    c. If *date* is present, let *dt* be ? ToNumber(*date*); else let *dt* be 1.
    d. If *hours* is present, let *h* be ? ToNumber(*hours*); else let *h* be 0.
    e. If *minutes* is present, let *min* be ? ToNumber(*minutes*); else let *min* be 0.
    f. If *seconds* is present, let *s* be ? ToNumber(*seconds*); else let *s* be 0.
    g. If *ms* is present, let *milli* be ? ToNumber(*ms*); else let *milli* be 0.
    h. If *y* is **NaN**, let *yr* be **NaN**.
    i. Else,
        i. Let *yi* be ! ToInteger(*y*).
        ii. If 0 ≤ *yi* ≤ 99, let *yr* be 1900 + *yi*; otherwise, let *yr* be *y*.
    j. Let *finalDate* be MakeDate(MakeDay(*yr*, *m*, *dt*), MakeTime(*h*, *min*, *s*, *milli*)).
    k. Let *O* be ? OrdinaryCreateFromConstructor(NewTarget, **"%Date.prototype%"**, « [[DateValue]] »).
    l. Set *O*.[[DateValue]] to TimeClip(UTC(*finalDate*)).
    m. Return *O*.

20.4.2.2 Date (*value*)

This description applies only if the Date constructor is called with exactly one argument.

When the **`Date`** function is called, the following steps are taken:

1. Let *numberOfArgs* be the number of arguments passed to this function call.
2. Assert: *numberOfArgs* = 1.
3. If NewTarget is **undefined**, then
    a. Let *now* be the Number that is the time value (UTC) identifying the current time.
    b. Return ToDateString(*now*).
4. Else,
    a. If Type(*value*) is Object and *value* has a [[DateValue]] internal slot, then
        i. Let *tv* be thisTimeValue(*value*).
    b. Else,
        i. Let *v* be ? ToPrimitive(*value*).
        ii. If Type(*v*) is String, then
            1. Assert: The next step never returns an abrupt completion because Type(*v*) is String.

2. Let *tv* be the result of parsing *v* as a date, in exactly the same manner as for the **`parse`** method (20.4.3.2).

iii. Else,

1. Let *tv* be ? ToNumber(*v*).

c. Let *O* be ? OrdinaryCreateFromConstructor(NewTarget, "%**Date.prototype**%", « [[DateValue]] »).

d. Set *O*.[[DateValue]] to TimeClip(*tv*).

e. Return *O*.

20.4.2.3 Date ( )

This description applies only if the Date constructor is called with no arguments.

When the **`Date`** function is called, the following steps are taken:

1. Let *numberOfArgs* be the number of arguments passed to this function call.
2. Assert: *numberOfArgs* = 0.
3. If NewTarget is **undefined**, then
   a. Let *now* be the Number that is the time value (UTC) identifying the current time.
   b. Return ToDateString(*now*).
4. Else,
   a. Let *O* be ? OrdinaryCreateFromConstructor(NewTarget, "%**Date.prototype**%", « [[DateValue]] »).
   b. Set *O*.[[DateValue]] to the time value (UTC) identifying the current time.
   c. Return *O*.

20.4.3 Properties of the Date Constructor

The Date constructor:

- has a [[Prototype]] internal slot whose value is %Function.prototype%.
- has the following properties:

20.4.3.1 Date.now ( )

The **`now`** function returns a Number value that is the time value designating the UTC date and time of the occurrence of the call to **`now`**.

20.4.3.2 Date.parse (*string*)

The **`parse`** function applies the ToString operator to its argument. If ToString results in an abrupt completion the Completion Record is immediately returned. Otherwise, **`parse`** interprets the resulting String as a date and time; it returns a Number, the UTC time value corresponding to the date and time. The String may be interpreted as a local time, a UTC time, or a time in some other time zone, depending on the contents of the String. The function first attempts to parse the String according to the format described in Date Time String Format (20.4.1.15), including expanded years. If the String does not conform to that format the function may fall back to any implementation-specific heuristics or implementation-specific date formats. Strings that are unrecognizable or contain out-of-bounds format element values shall cause **`Date.parse`** to return **NaN**.

If the String conforms to the Date Time String Format, substitute values take the place of absent format elements. When the **`MM`** or **`DD`** elements are absent, **"01"** is used. When the **`HH`**, **`mm`**, or **`ss`** elements are absent, **"00"** is used. When

the **sss** element is absent, **"000"** is used. When the UTC offset representation is absent, date-only forms are interpreted as a UTC time and date-time forms are interpreted as a local time.

If **x** is any Date object whose milliseconds amount is zero within a particular implementation of ECMAScript, then all of the following expressions should produce the same numeric value in that implementation, if all the properties referenced have their initial values:

```
x.valueOf()
Date.parse(x.toString())
Date.parse(x.toUTCString())
Date.parse(x.toISOString())
```

However, the expression

```
Date.parse(x.toLocaleString())
```

is not required to produce the same Number value as the preceding three expressions and, in general, the value produced by **Date.parse** is implementation-dependent when given any String value that does not conform to the Date Time String Format (20.4.1.15) and that could not be produced in that implementation by the **toString** or **toUTCString** method.

20.4.3.3 Date.prototype

The initial value of **Date.prototype** is %Date.prototype%.

This property has the attributes { [[Writable]]: **false**, [[Enumerable]]: **false**, [[Configurable]]: **false** }.

20.4.3.4 Date.UTC (*year* [, *month* [, *date* [, *hours* [, *minutes* [, *seconds* [, *ms*]]]]]])

When the **UTC** function is called, the following steps are taken:

1. Let *y* be ? ToNumber(*year*).
2. If *month* is present, let *m* be ? ToNumber(*month*); else let *m* be 0.
3. If *date* is present, let *dt* be ? ToNumber(*date*); else let *dt* be 1.
4. If *hours* is present, let *h* be ? ToNumber(*hours*); else let *h* be 0.
5. If *minutes* is present, let *min* be ? ToNumber(*minutes*); else let *min* be 0.
6. If *seconds* is present, let *s* be ? ToNumber(*seconds*); else let *s* be 0.
7. If *ms* is present, let *milli* be ? ToNumber(*ms*); else let *milli* be 0.
8. If *y* is **NaN**, let *yr* be **NaN**.
9. Else,
    a. Let *yi* be ! ToInteger(*y*).
    b. If $0 \le yi \le 99$, let *yr* be 1900 + *yi*; otherwise, let *yr* be *y*.
10. Return TimeClip(MakeDate(MakeDay(*yr*, *m*, *dt*), MakeTime(*h*, *min*, *s*, *milli*))).

The **"length"** property of the **UTC** function is 7.

NOTE The **UTC** function differs from the **Date** constructor in two ways: it returns a time value as a Number, rather than creating a Date object, and it interprets the arguments in UTC rather than as local time.

20.4.4 Properties of the Date Prototype Object

The Date prototype object:

- is the intrinsic object *%DatePrototype%*.
- is itself an ordinary object.
- is not a Date instance and does not have a [[DateValue]] internal slot.
- has a [[Prototype]] internal slot whose value is %Object.prototype%.

Unless explicitly defined otherwise, the methods of the Date prototype object defined below are not generic and the **this** value passed to them must be an object that has a [[DateValue]] internal slot that has been initialized to a time value.

The abstract operation *thisTimeValue*(*value*) performs the following steps:

1. If Type(*value*) is Object and *value* has a [[DateValue]] internal slot, then
    a. Return *value*.[[DateValue]].
2. Throw a **TypeError** exception.

In following descriptions of functions that are properties of the Date prototype object, the phrase "*this Date object*" refers to the object that is the **this** value for the invocation of the function. If the Type of the **this** value is not Object, a **TypeError** exception is thrown. The phrase "*this time value*" within the specification of a method refers to the result returned by calling the abstract operation thisTimeValue with the **this** value of the method invocation passed as the argument.

20.4.4.1 Date.prototype.constructor

The initial value of **`Date.prototype.constructor`** is %Date%.

20.4.4.2 Date.prototype.getDate ( )

The following steps are performed:

1. Let *t* be ? thisTimeValue(**this** value).
2. If *t* is **NaN**, return **NaN**.
3. Return DateFromTime(LocalTime(*t*)).

20.4.4.3 Date.prototype.getDay ( )

The following steps are performed:

1. Let *t* be ? thisTimeValue(**this** value).
2. If *t* is **NaN**, return **NaN**.
3. Return WeekDay(LocalTime(*t*)).

20.4.4.4 Date.prototype.getFullYear ( )

The following steps are performed:

1. Let *t* be ? thisTimeValue(**this** value).
2. If *t* is **NaN**, return **NaN**.

3. Return YearFromTime(LocalTime(*t*)).

20.4.4.5 Date.prototype.getHours ( )

The following steps are performed:

1. Let *t* be ? thisTimeValue(**this** value).
2. If *t* is **NaN**, return **NaN**.
3. Return HourFromTime(LocalTime(*t*)).

20.4.4.6 Date.prototype.getMilliseconds ( )

The following steps are performed:

1. Let *t* be ? thisTimeValue(**this** value).
2. If *t* is **NaN**, return **NaN**.
3. Return msFromTime(LocalTime(*t*)).

20.4.4.7 Date.prototype.getMinutes ( )

The following steps are performed:

1. Let *t* be ? thisTimeValue(**this** value).
2. If *t* is **NaN**, return **NaN**.
3. Return MinFromTime(LocalTime(*t*)).

20.4.4.8 Date.prototype.getMonth ( )

The following steps are performed:

1. Let *t* be ? thisTimeValue(**this** value).
2. If *t* is **NaN**, return **NaN**.
3. Return MonthFromTime(LocalTime(*t*)).

20.4.4.9 Date.prototype.getSeconds ( )

The following steps are performed:

1. Let *t* be ? thisTimeValue(**this** value).
2. If *t* is **NaN**, return **NaN**.
3. Return SecFromTime(LocalTime(*t*)).

20.4.4.10 Date.prototype.getTime ( )

The following steps are performed:

1. Return ? thisTimeValue(**this** value).

20.4.4.11 Date.prototype.getTimezoneOffset ( )

The following steps are performed:

1. Let *t* be ? thisTimeValue(**this** value).
2. If *t* is **NaN**, return **NaN**.
3. Return (*t* - LocalTime(*t*)) / msPerMinute.

20.4.4.12 Date.prototype.getUTCDate ( )

The following steps are performed:

1. Let *t* be ? thisTimeValue(**this** value).
2. If *t* is **NaN**, return **NaN**.
3. Return DateFromTime(*t*).

20.4.4.13 Date.prototype.getUTCDay ( )

The following steps are performed:

1. Let *t* be ? thisTimeValue(**this** value).
2. If *t* is **NaN**, return **NaN**.
3. Return WeekDay(*t*).

20.4.4.14 Date.prototype.getUTCFullYear ( )

The following steps are performed:

1. Let *t* be ? thisTimeValue(**this** value).
2. If *t* is **NaN**, return **NaN**.
3. Return YearFromTime(*t*).

20.4.4.15 Date.prototype.getUTCHours ( )

The following steps are performed:

1. Let *t* be ? thisTimeValue(**this** value).
2. If *t* is **NaN**, return **NaN**.
3. Return HourFromTime(*t*).

20.4.4.16 Date.prototype.getUTCMilliseconds ( )

The following steps are performed:

1. Let *t* be ? thisTimeValue(**this** value).
2. If *t* is **NaN**, return **NaN**.
3. Return msFromTime(*t*).

20.4.4.17 Date.prototype.getUTCMinutes ( )

The following steps are performed:

1. Let *t* be ? thisTimeValue(**this** value).

2. If *t* is **NaN**, return **NaN**.
3. Return MinFromTime(*t*).

20.4.4.18 Date.prototype.getUTCMonth ( )

The following steps are performed:

1. Let *t* be ? thisTimeValue(**this** value).
2. If *t* is **NaN**, return **NaN**.
3. Return MonthFromTime(*t*).

20.4.4.19 Date.prototype.getUTCSeconds ( )

The following steps are performed:

1. Let *t* be ? thisTimeValue(**this** value).
2. If *t* is **NaN**, return **NaN**.
3. Return SecFromTime(*t*).

20.4.4.20 Date.prototype.setDate (*date*)

The following steps are performed:

1. Let *t* be LocalTime(? thisTimeValue(**this** value)).
2. Let *dt* be ? ToNumber(*date*).
3. Let *newDate* be MakeDate(MakeDay(YearFromTime(*t*), MonthFromTime(*t*), *dt*), TimeWithinDay(*t*)).
4. Let *u* be TimeClip(UTC(*newDate*)).
5. Set the [[DateValue]] internal slot of this Date object to *u*.
6. Return *u*.

20.4.4.21 Date.prototype.setFullYear (*year* [, *month* [, *date*]])

The following steps are performed:

1. Let *t* be ? thisTimeValue(**this** value).
2. If *t* is **NaN**, set *t* to **+0**; otherwise, set *t* to LocalTime(*t*).
3. Let *y* be ? ToNumber(*year*).
4. If *month* is not present, let *m* be MonthFromTime(*t*); otherwise, let *m* be ? ToNumber(*month*).
5. If *date* is not present, let *dt* be DateFromTime(*t*); otherwise, let *dt* be ? ToNumber(*date*).
6. Let *newDate* be MakeDate(MakeDay(*y*, *m*, *dt*), TimeWithinDay(*t*)).
7. Let *u* be TimeClip(UTC(*newDate*)).
8. Set the [[DateValue]] internal slot of this Date object to *u*.
9. Return *u*.

The **"length"** property of the **`setFullYear`** method is 3.

> NOTE If *month* is not present, this method behaves as if *month* was present with the value **`getMonth()`**. If *date* is not present, it behaves as if *date* was present with the value **`getDate()`**.

20.4.4.22 Date.prototype.setHours (*hour* [, *min* [, *sec* [, *ms*]]])

The following steps are performed:

1. Let *t* be LocalTime(? thisTimeValue(**this** value)).
2. Let *h* be ? ToNumber(*hour*).
3. If *min* is not present, let *m* be MinFromTime(*t*); otherwise, let *m* be ? ToNumber(*min*).
4. If *sec* is not present, let *s* be SecFromTime(*t*); otherwise, let *s* be ? ToNumber(*sec*).
5. If *ms* is not present, let *milli* be msFromTime(*t*); otherwise, let *milli* be ? ToNumber(*ms*).
6. Let *date* be MakeDate(Day(*t*), MakeTime(*h*, *m*, *s*, *milli*)).
7. Let *u* be TimeClip(UTC(*date*)).
8. Set the [[DateValue]] internal slot of this Date object to *u*.
9. Return *u*.

The **"length"** property of the **`setHours`** method is 4.

> NOTE If *min* is not present, this method behaves as if *min* was present with the value **`getMinutes()`**. If *sec* is not present, it behaves as if *sec* was present with the value **`getSeconds()`**. If *ms* is not present, it behaves as if *ms* was present with the value **`getMilliseconds()`**.

20.4.4.23 Date.prototype.setMilliseconds (*ms*)

The following steps are performed:

1. Let *t* be LocalTime(? thisTimeValue(**this** value)).
2. Set *ms* to ? ToNumber(*ms*).
3. Let *time* be MakeTime(HourFromTime(*t*), MinFromTime(*t*), SecFromTime(*t*), *ms*).
4. Let *u* be TimeClip(UTC(MakeDate(Day(*t*), *time*))).
5. Set the [[DateValue]] internal slot of this Date object to *u*.
6. Return *u*.

20.4.4.24 Date.prototype.setMinutes (*min* [, *sec* [, *ms*]])

The following steps are performed:

1. Let *t* be LocalTime(? thisTimeValue(**this** value)).
2. Let *m* be ? ToNumber(*min*).
3. If *sec* is not present, let *s* be SecFromTime(*t*); otherwise, let *s* be ? ToNumber(*sec*).
4. If *ms* is not present, let *milli* be msFromTime(*t*); otherwise, let *milli* be ? ToNumber(*ms*).
5. Let *date* be MakeDate(Day(*t*), MakeTime(HourFromTime(*t*), *m*, *s*, *milli*)).
6. Let *u* be TimeClip(UTC(*date*)).
7. Set the [[DateValue]] internal slot of this Date object to *u*.
8. Return *u*.

The **"length"** property of the **`setMinutes`** method is 3.

> NOTE If *sec* is not present, this method behaves as if *sec* was present with the value **`getSeconds()`**. If *ms* is not present, this behaves as if *ms* was present with the value **`getMilliseconds()`**.

20.4.4.25 Date.prototype.setMonth (*month* [, *date*])

The following steps are performed:

1. Let *t* be LocalTime(? thisTimeValue(**this** value)).
2. Let *m* be ? ToNumber(*month*).
3. If *date* is not present, let *dt* be DateFromTime(*t*); otherwise, let *dt* be ? ToNumber(*date*).
4. Let *newDate* be MakeDate(MakeDay(YearFromTime(*t*), *m*, *dt*), TimeWithinDay(*t*)).
5. Let *u* be TimeClip(UTC(*newDate*)).
6. Set the [[DateValue]] internal slot of this Date object to *u*.
7. Return *u*.

The **"length"** property of the **`setMonth`** method is 2.

> NOTE If *date* is not present, this method behaves as if *date* was present with the value **`getDate()`**.

20.4.4.26 Date.prototype.setSeconds (*sec* [, *ms*])

The following steps are performed:

1. Let *t* be LocalTime(? thisTimeValue(**this** value)).
2. Let *s* be ? ToNumber(*sec*).
3. If *ms* is not present, let *milli* be msFromTime(*t*); otherwise, let *milli* be ? ToNumber(*ms*).
4. Let *date* be MakeDate(Day(*t*), MakeTime(HourFromTime(*t*), MinFromTime(*t*), *s*, *milli*)).
5. Let *u* be TimeClip(UTC(*date*)).
6. Set the [[DateValue]] internal slot of this Date object to *u*.
7. Return *u*.

The **"length"** property of the **`setSeconds`** method is 2.

> NOTE If *ms* is not present, this method behaves as if *ms* was present with the value **`getMilliseconds()`**.

20.4.4.27 Date.prototype.setTime (*time*)

The following steps are performed:

1. Perform ? thisTimeValue(**this** value).
2. Let *t* be ? ToNumber(*time*).
3. Let *v* be TimeClip(*t*).
4. Set the [[DateValue]] internal slot of this Date object to *v*.
5. Return *v*.

20.4.4.28 Date.prototype.setUTCDate (*date*)

The following steps are performed:

1. Let *t* be ? thisTimeValue(**this** value).
2. Let *dt* be ? ToNumber(*date*).

3. Let *newDate* be MakeDate(MakeDay(YearFromTime(*t*), MonthFromTime(*t*), *dt*), TimeWithinDay(*t*)).
4. Let *v* be TimeClip(*newDate*).
5. Set the [[DateValue]] internal slot of this Date object to *v*.
6. Return *v*.

20.4.4.29 Date.prototype.setUTCFullYear (*year* [, *month* [, *date*]])

The following steps are performed:

1. Let *t* be ? thisTimeValue(**this** value).
2. If *t* is **NaN**, set *t* to **+0**.
3. Let *y* be ? ToNumber(*year*).
4. If *month* is not present, let *m* be MonthFromTime(*t*); otherwise, let *m* be ? ToNumber(*month*).
5. If *date* is not present, let *dt* be DateFromTime(*t*); otherwise, let *dt* be ? ToNumber(*date*).
6. Let *newDate* be MakeDate(MakeDay(*y*, *m*, *dt*), TimeWithinDay(*t*)).
7. Let *v* be TimeClip(*newDate*).
8. Set the [[DateValue]] internal slot of this Date object to *v*.
9. Return *v*.

The **"length"** property of the **`setUTCFullYear`** method is 3.

> NOTE If *month* is not present, this method behaves as if *month* was present with the value **`getUTCMonth()`**. If *date* is not present, it behaves as if *date* was present with the value **`getUTCDate()`**.

20.4.4.30 Date.prototype.setUTCHours (*hour* [, *min* [, *sec* [, *ms*]]])

The following steps are performed:

1. Let *t* be ? thisTimeValue(**this** value).
2. Let *h* be ? ToNumber(*hour*).
3. If *min* is not present, let *m* be MinFromTime(*t*); otherwise, let *m* be ? ToNumber(*min*).
4. If *sec* is not present, let *s* be SecFromTime(*t*); otherwise, let *s* be ? ToNumber(*sec*).
5. If *ms* is not present, let *milli* be msFromTime(*t*); otherwise, let *milli* be ? ToNumber(*ms*).
6. Let *newDate* be MakeDate(Day(*t*), MakeTime(*h*, *m*, *s*, *milli*)).
7. Let *v* be TimeClip(*newDate*).
8. Set the [[DateValue]] internal slot of this Date object to *v*.
9. Return *v*.

The **"length"** property of the **`setUTCHours`** method is 4.

> NOTE If *min* is not present, this method behaves as if *min* was present with the value **`getUTCMinutes()`**. If *sec* is not present, it behaves as if *sec* was present with the value **`getUTCSeconds()`**. If *ms* is not present, it behaves as if *ms* was present with the value **`getUTCMilliseconds()`**.

20.4.4.31 Date.prototype.setUTCMilliseconds (*ms*)

The following steps are performed:

1. Let *t* be ? thisTimeValue(**this** value).
2. Let *milli* be ? ToNumber(*ms*).
3. Let *time* be MakeTime(HourFromTime(*t*), MinFromTime(*t*), SecFromTime(*t*), *milli*).
4. Let *v* be TimeClip(MakeDate(Day(*t*), *time*)).
5. Set the [[DateValue]] internal slot of this Date object to *v*.
6. Return *v*.

20.4.4.32 Date.prototype.setUTCMinutes (*min* [, *sec* [, *ms*]])

The following steps are performed:

1. Let *t* be ? thisTimeValue(**this** value).
2. Let *m* be ? ToNumber(*min*).
3. If *sec* is not present, let *s* be SecFromTime(*t*).
4. Else,
    a. Let *s* be ? ToNumber(*sec*).
5. If *ms* is not present, let *milli* be msFromTime(*t*).
6. Else,
    a. Let *milli* be ? ToNumber(*ms*).
7. Let *date* be MakeDate(Day(*t*), MakeTime(HourFromTime(*t*), *m*, *s*, *milli*)).
8. Let *v* be TimeClip(*date*).
9. Set the [[DateValue]] internal slot of this Date object to *v*.
10. Return *v*.

The **"length"** property of the **`setUTCMinutes`** method is 3.

> NOTE If *sec* is not present, this method behaves as if *sec* was present with the value **`getUTCSeconds()`**. If *ms* is not present, it function behaves as if *ms* was present with the value return by **`getUTCMilliseconds()`**.

20.4.4.33 Date.prototype.setUTCMonth (*month* [, *date*])

The following steps are performed:

1. Let *t* be ? thisTimeValue(**this** value).
2. Let *m* be ? ToNumber(*month*).
3. If *date* is not present, let *dt* be DateFromTime(*t*).
4. Else,
    a. Let *dt* be ? ToNumber(*date*).
5. Let *newDate* be MakeDate(MakeDay(YearFromTime(*t*), *m*, *dt*), TimeWithinDay(*t*)).
6. Let *v* be TimeClip(*newDate*).
7. Set the [[DateValue]] internal slot of this Date object to *v*.
8. Return *v*.

The **"length"** property of the **`setUTCMonth`** method is 2.

NOTE If *date* is not present, this method behaves as if *date* was present with the value **`getUTCDate()`**.

20.4.4.34 Date.prototype.setUTCSeconds (*sec* [, *ms*])

The following steps are performed:

1. Let *t* be ? thisTimeValue(**this** value).
2. Let *s* be ? ToNumber(*sec*).
3. If *ms* is not present, let *milli* be msFromTime(*t*).
4. Else,
   a. Let *milli* be ? ToNumber(*ms*).
5. Let *date* be MakeDate(Day(*t*), MakeTime(HourFromTime(*t*), MinFromTime(*t*), *s*, *milli*)).
6. Let *v* be TimeClip(*date*).
7. Set the [[DateValue]] internal slot of this Date object to *v*.
8. Return *v*.

The **"length"** property of the **`setUTCSeconds`** method is 2.

NOTE If *ms* is not present, this method behaves as if *ms* was present with the value **`getUTCMilliseconds()`**.

20.4.4.35 Date.prototype.toDateString ( )

The following steps are performed:

1. Let *O* be this Date object.
2. Let *tv* be ? thisTimeValue(*O*).
3. If *tv* is **NaN**, return **"Invalid Date"**.
4. Let *t* be LocalTime(*tv*).
5. Return DateString(*t*).

20.4.4.36 Date.prototype.toISOString ( )

If this time value is not a finite Number or if it corresponds with a year that cannot be represented in the Date Time String Format, this function throws a **RangeError** exception. Otherwise, it returns a String representation of this time value in that format on the UTC time scale, including all format elements and the UTC offset representation **"Z"**.

20.4.4.37 Date.prototype.toJSON (*key*)

This function provides a String representation of a Date object for use by **`JSON.stringify`** (24.5.2).

When the **`toJSON`** method is called with argument *key*, the following steps are taken:

1. Let *O* be ? ToObject(**this** value).
2. Let *tv* be ? ToPrimitive(*O*, hint Number).
3. If Type(*tv*) is Number and *tv* is not finite, return **null**.
4. Return ? Invoke(*O*, **"toISOString"**).

NOTE 1 The argument is ignored.

NOTE 2 The **`toJSON`** function is intentionally generic; it does not require that its **this** value be a Date object. Therefore, it can be transferred to other kinds of objects for use as a method. However, it does require that any such object have a **`toISOString`** method.

20.4.4.38 Date.prototype.toLocaleDateString ([*reserved1* [, *reserved2*]])

An ECMAScript implementation that includes the ECMA-402 Internationalization API must implement the **`Date.prototype.toLocaleDateString`** method as specified in the ECMA-402 specification. If an ECMAScript implementation does not include the ECMA-402 API the following specification of the **`toLocaleDateString`** method is used.

This function returns a String value. The contents of the String are implementation-dependent, but are intended to represent the “date” portion of the Date in the current time zone in a convenient, human-readable form that corresponds to the conventions of the host environment's current locale.

The meaning of the optional parameters to this method are defined in the ECMA-402 specification; implementations that do not include ECMA-402 support must not use those parameter positions for anything else.

20.4.4.39 Date.prototype.toLocaleString ([*reserved1* [, *reserved2*]])

An ECMAScript implementation that includes the ECMA-402 Internationalization API must implement the **`Date.prototype.toLocaleString`** method as specified in the ECMA-402 specification. If an ECMAScript implementation does not include the ECMA-402 API the following specification of the **`toLocaleString`** method is used.

This function returns a String value. The contents of the String are implementation-dependent, but are intended to represent the Date in the current time zone in a convenient, human-readable form that corresponds to the conventions of the host environment's current locale.

The meaning of the optional parameters to this method are defined in the ECMA-402 specification; implementations that do not include ECMA-402 support must not use those parameter positions for anything else.

20.4.4.40 Date.prototype.toLocaleTimeString ([*reserved1* [, *reserved2*]])

An ECMAScript implementation that includes the ECMA-402 Internationalization API must implement the **`Date.prototype.toLocaleTimeString`** method as specified in the ECMA-402 specification. If an ECMAScript implementation does not include the ECMA-402 API the following specification of the **`toLocaleTimeString`** method is used.

This function returns a String value. The contents of the String are implementation-dependent, but are intended to represent the “time” portion of the Date in the current time zone in a convenient, human-readable form that corresponds to the conventions of the host environment's current locale.

The meaning of the optional parameters to this method are defined in the ECMA-402 specification; implementations that do not include ECMA-402 support must not use those parameter positions for anything else.

20.4.4.41 Date.prototype.toString ( )

The following steps are performed:

1. Let *tv* be ? thisTimeValue(**this** value).
2. Return ToDateString(*tv*).

NOTE 1 For any Date object **`d`** whose milliseconds amount is zero, the result of **`Date.parse(d.toString())`** is equal to **`d.valueOf()`**. See 20.4.3.2.

NOTE 2 The **`toString`** function is not generic; it throws a **TypeError** exception if its **this** value is not a Date object. Therefore, it cannot be transferred to other kinds of objects for use as a method.

20.4.4.41.1 Runtime Semantics: TimeString (*tv*)

The following steps are performed:

1. Assert: Type(*tv*) is Number.
2. Assert: *tv* is not **NaN**.
3. Let *hour* be the String representation of HourFromTime(*tv*), formatted as a two-digit decimal number, padded to the left with a zero if necessary.
4. Let *minute* be the String representation of MinFromTime(*tv*), formatted as a two-digit decimal number, padded to the left with a zero if necessary.
5. Let *second* be the String representation of SecFromTime(*tv*), formatted as a two-digit decimal number, padded to the left with a zero if necessary.
6. Return the string-concatenation of *hour*, **":"**, *minute*, **":"**, *second*, the code unit 0x0020 (SPACE), and **"GMT"**.

20.4.4.41.2 Runtime Semantics: DateString (*tv*)

The following steps are performed:

1. Assert: Type(*tv*) is Number.
2. Assert: *tv* is not **NaN**.
3. Let *weekday* be the Name of the entry in Table 50 with the Number WeekDay(*tv*).
4. Let *month* be the Name of the entry in Table 51 with the Number MonthFromTime(*tv*).
5. Let *day* be the String representation of DateFromTime(*tv*), formatted as a two-digit decimal number, padded to the left with a zero if necessary.
6. Let *yv* be YearFromTime(*tv*).
7. If *yv* ≥ 0, let *yearSign* be the empty String; otherwise, let *yearSign* be **"-"**.
8. Let *year* be the String representation of abs(*yv*), formatted as a decimal number.
9. Let *paddedYear* be ! StringPad(*year*, 4, **"0"**, start).
10. Return the string-concatenation of *weekday*, the code unit 0x0020 (SPACE), *month*, the code unit 0x0020 (SPACE), *day*, the code unit 0x0020 (SPACE), *yearSign*, and *paddedYear*.

Table 50: Names of days of the week

Number	Name
0	**"Sun"**
1	**"Mon"**
2	**"Tue"**
3	**"Wed"**
4	**"Thu"**
5	**"Fri"**
6	**"Sat"**

Table 51: Names of months of the year

Number	Name
0	**"Jan"**
1	**"Feb"**
2	**"Mar"**
3	**"Apr"**
4	**"May"**
5	**"Jun"**
6	**"Jul"**
7	**"Aug"**
8	**"Sep"**
9	**"Oct"**
10	**"Nov"**
11	**"Dec"**

20.4.4.41.3 Runtime Semantics: TimeZoneString (*tv*)

The following steps are performed:

1. Assert: Type(*tv*) is Number.
2. Assert: *tv* is not **NaN**.
3. Let *offset* be LocalTZA(*tv*, **true**).
4. If *offset* ≥ 0, let *offsetSign* be **"+"**; otherwise, let *offsetSign* be **"-"**.
5. Let *offsetMin* be the String representation of MinFromTime(abs(*offset*)), formatted as a two-digit decimal

number, padded to the left with a zero if necessary.
6. Let *offsetHour* be the String representation of HourFromTime(abs(*offset*)), formatted as a two-digit decimal number, padded to the left with a zero if necessary.
7. Let *tzName* be an implementation-defined string that is either the empty String or the string-concatenation of the code unit 0x0020 (SPACE), the code unit 0x0028 (LEFT PARENTHESIS), an implementation-dependent timezone name, and the code unit 0x0029 (RIGHT PARENTHESIS).
8. Return the string-concatenation of *offsetSign*, *offsetHour*, *offsetMin*, and *tzName*.

20.4.4.41.4 Runtime Semantics: ToDateString (*tv*)

The following steps are performed:

1. Assert: Type(*tv*) is Number.
2. If *tv* is **NaN**, return **"Invalid Date"**.
3. Let *t* be LocalTime(*tv*).
4. Return the string-concatenation of DateString(*t*), the code unit 0x0020 (SPACE), TimeString(*t*), and TimeZoneString(*tv*).

20.4.4.42 Date.prototype.toTimeString ( )

The following steps are performed:

1. Let *O* be this Date object.
2. Let *tv* be ? thisTimeValue(*O*).
3. If *tv* is **NaN**, return **"Invalid Date"**.
4. Let *t* be LocalTime(*tv*).
5. Return the string-concatenation of TimeString(*t*) and TimeZoneString(*tv*).

20.4.4.43 Date.prototype.toUTCString ( )

The **`toUTCString`** method returns a String value representing the instance in time corresponding to this time value. The format of the String is based upon "HTTP-date" from RFC 7231, generalized to support the full range of times supported by ECMAScript Date objects. It performs the following steps:

1. Let *O* be this Date object.
2. Let *tv* be ? thisTimeValue(*O*).
3. If *tv* is **NaN**, return **"Invalid Date"**.
4. Let *weekday* be the Name of the entry in Table 50 with the Number WeekDay(*tv*).
5. Let *month* be the Name of the entry in Table 51 with the Number MonthFromTime(*tv*).
6. Let *day* be the String representation of DateFromTime(*tv*), formatted as a two-digit decimal number, padded to the left with a zero if necessary.
7. Let *yv* be YearFromTime(*tv*).
8. If *yv* ≥ 0, let *yearSign* be the empty String; otherwise, let *yearSign* be **"-"**.
9. Let *year* be the String representation of abs(*yv*), formatted as a decimal number.
10. Let *paddedYear* be ! StringPad(*year*, 4, **"0"**, start).
11. Return the string-concatenation of *weekday*, **","**, the code unit 0x0020 (SPACE), *day*, the code unit 0x0020 (SPACE), *month*, the code unit 0x0020 (SPACE), *yearSign*, *paddedYear*, the code unit 0x0020 (SPACE), and TimeString(*tv*).

20.4.4.44 Date.prototype.valueOf ( )

The following steps are performed:

1. Return ? thisTimeValue(**this** value).

20.4.4.45 Date.prototype [@@toPrimitive] (*hint*)

This function is called by ECMAScript language operators to convert a Date object to a primitive value. The allowed values for *hint* are **"default"**, **"number"**, and **"string"**. Date objects, are unique among built-in ECMAScript object in that they treat **"default"** as being equivalent to **"string"**, All other built-in ECMAScript objects treat **"default"** as being equivalent to **"number"**.

When the **`@@toPrimitive`** method is called with argument *hint*, the following steps are taken:

1. Let *O* be the **this** value.
2. If Type(*O*) is not Object, throw a **TypeError** exception.
3. If *hint* is the String value **"string"** or the String value **"default"**, then
   a. Let *tryFirst* be **"string"**.
4. Else if *hint* is the String value **"number"**, then
   a. Let *tryFirst* be **"number"**.
5. Else, throw a **TypeError** exception.
6. Return ? OrdinaryToPrimitive(*O*, *tryFirst*).

The value of the **"name"** property of this function is **"[Symbol.toPrimitive]"**.

This property has the attributes { [[Writable]]: **false**, [[Enumerable]]: **false**, [[Configurable]]: **true** }.

20.4.5 Properties of Date Instances

Date instances are ordinary objects that inherit properties from the Date prototype object. Date instances also have a [[DateValue]] internal slot. The [[DateValue]] internal slot is the time value represented by this Date object.

21 Text Processing

21.1 String Objects

21.1.1 The String Constructor

The String constructor:

- is the intrinsic object *%String%*.
- is the initial value of the **"String"** property of the global object.
- creates and initializes a new String object when called as a constructor.
- performs a type conversion when called as a function rather than as a constructor.
- is designed to be subclassable. It may be used as the value of an **`extends`** clause of a class definition. Subclass constructors that intend to inherit the specified **`String`** behaviour must include a **`super`** call to the **`String`**

constructor to create and initialize the subclass instance with a [[StringData]] internal slot.

21.1.1.1 String (*value*)

When **`String`** is called with argument *value*, the following steps are taken:

1. If *value* is not present, let *s* be the empty String.
2. Else,
   a. If NewTarget is **undefined** and Type(*value*) is Symbol, return SymbolDescriptiveString(*value*).
   b. Let *s* be ? ToString(*value*).
3. If NewTarget is **undefined**, return *s*.
4. Return ! StringCreate(*s*, ? GetPrototypeFromConstructor(NewTarget, "%**String.prototype**%")).

21.1.2 Properties of the String Constructor

The String constructor:

- has a [[Prototype]] internal slot whose value is %Function.prototype%.
- has the following properties:

21.1.2.1 String.fromCharCode (...*codeUnits*)

The **`String.fromCharCode`** function may be called with any number of arguments which form the rest parameter *codeUnits*. The following steps are taken:

1. Let *codeUnits* be a List containing the arguments passed to this function.
2. Let *length* be the number of elements in *codeUnits*.
3. Let *elements* be a new empty List.
4. Let *nextIndex* be 0.
5. Repeat, while *nextIndex* < *length*
   a. Let *next* be *codeUnits*[*nextIndex*].
   b. Let *nextCU* be ? ToUint16(*next*).
   c. Append *nextCU* to the end of *elements*.
   d. Set *nextIndex* to *nextIndex* + 1.
6. Return the String value whose code units are, in order, the elements in the List *elements*. If *length* is 0, the empty String is returned.

The **"length"** property of the **`fromCharCode`** function is 1.

21.1.2.2 String.fromCodePoint (...*codePoints*)

The **`String.fromCodePoint`** function may be called with any number of arguments which form the rest parameter *codePoints*. The following steps are taken:

1. Let *codePoints* be a List containing the arguments passed to this function.
2. Let *length* be the number of elements in *codePoints*.
3. Let *elements* be a new empty List.
4. Let *nextIndex* be 0.
5. Repeat, while *nextIndex* < *length*

a. Let *next* be *codePoints*[*nextIndex*].
b. Let *nextCP* be ? ToNumber(*next*).
c. If ! IsInteger(*nextCP*) is **false**, throw a **RangeError** exception.
d. If *nextCP* < 0 or *nextCP* > 0x10FFFF, throw a **RangeError** exception.
e. Append the elements of the UTF16Encoding of *nextCP* to the end of *elements*.
f. Set *nextIndex* to *nextIndex* + 1.

6. Return the String value whose code units are, in order, the elements in the List *elements*. If *length* is 0, the empty String is returned.

The **"length"** property of the **`fromCodePoint`** function is 1.

21.1.2.3 String.prototype

The initial value of **`String.prototype`** is %String.prototype%.

This property has the attributes { [[Writable]]: **false**, [[Enumerable]]: **false**, [[Configurable]]: **false** }.

21.1.2.4 String.raw (*template*, ...*substitutions*)

The **`String.raw`** function may be called with a variable number of arguments. The first argument is *template* and the remainder of the arguments form the List *substitutions*. The following steps are taken:

1. Let *substitutions* be a List consisting of all of the arguments passed to this function, starting with the second argument. If fewer than two arguments were passed, the List is empty.
2. Let *numberOfSubstitutions* be the number of elements in *substitutions*.
3. Let *cooked* be ? ToObject(*template*).
4. Let *raw* be ? ToObject(? Get(*cooked*, **"raw"**)).
5. Let *literalSegments* be ? LengthOfArrayLike(*raw*).
6. If *literalSegments* ≤ 0, return the empty String.
7. Let *stringElements* be a new empty List.
8. Let *nextIndex* be 0.
9. Repeat,
   a. Let *nextKey* be ! ToString(*nextIndex*).
   b. Let *nextSeg* be ? ToString(? Get(*raw*, *nextKey*)).
   c. Append in order the code unit elements of *nextSeg* to the end of *stringElements*.
   d. If *nextIndex* + 1 = *literalSegments*, then
      i. Return the String value whose code units are, in order, the elements in the List *stringElements*. If *stringElements* has no elements, the empty String is returned.
   e. If *nextIndex* < *numberOfSubstitutions*, let *next* be *substitutions*[*nextIndex*].
   f. Else, let *next* be the empty String.
   g. Let *nextSub* be ? ToString(*next*).
   h. Append in order the code unit elements of *nextSub* to the end of *stringElements*.
   i. Set *nextIndex* to *nextIndex* + 1.

NOTE String.raw is intended for use as a tag function of a Tagged Template (12.3.11). When called as such, the first argument will be a well formed template object and the rest parameter will contain the substitution values.

21.1.3 Properties of the String Prototype Object

The String prototype object:

- is the intrinsic object *%StringPrototype%*.
- is a String exotic object and has the internal methods specified for such objects.
- has a [[StringData]] internal slot whose value is the empty String.
- has a **"length"** property whose initial value is 0 and whose attributes are { [[Writable]]: **false**, [[Enumerable]]: **false**, [[Configurable]]: **false** }.
- has a [[Prototype]] internal slot whose value is %Object.prototype%.

Unless explicitly stated otherwise, the methods of the String prototype object defined below are not generic and the **this** value passed to them must be either a String value or an object that has a [[StringData]] internal slot that has been initialized to a String value.

The abstract operation *thisStringValue*(*value*) performs the following steps:

1. If Type(*value*) is String, return *value*.
2. If Type(*value*) is Object and *value* has a [[StringData]] internal slot, then
   a. Let *s* be *value*.[[StringData]].
   b. Assert: Type(*s*) is String.
   c. Return *s*.
3. Throw a **TypeError** exception.

21.1.3.1 String.prototype.charAt (*pos*)

NOTE 1 Returns a single element String containing the code unit at index *pos* within the String value resulting from converting this object to a String. If there is no element at that index, the result is the empty String. The result is a String value, not a String object.

If **`pos`** is a value of Number type that is an integer, then the result of **`x.charAt(pos)`** is equal to the result of **`x.substring(pos, pos + 1)`**.

When the **`charAt`** method is called with one argument *pos*, the following steps are taken:

1. Let *O* be ? RequireObjectCoercible(**this** value).
2. Let *S* be ? ToString(*O*).
3. Let *position* be ? ToInteger(*pos*).
4. Let *size* be the length of *S*.
5. If *position* < 0 or *position* ≥ *size*, return the empty String.
6. Return the String value of length 1, containing one code unit from *S*, namely the code unit at index *position*.

NOTE 2 The **`charAt`** function is intentionally generic; it does not require that its **this** value be a String object. Therefore, it can be transferred to other kinds of objects for use as a method.

21.1.3.2 String.prototype.charCodeAt (*pos*)

NOTE 1 Returns a Number (a nonnegative integer less than 2^{16}) that is the numeric value of the code unit at index *pos* within the String resulting from converting this object to a String. If there is no element at that index, the result is **NaN**.

When the **`charCodeAt`** method is called with one argument *pos*, the following steps are taken:

1. Let *O* be ? RequireObjectCoercible(**this** value).
2. Let *S* be ? ToString(*O*).
3. Let *position* be ? ToInteger(*pos*).
4. Let *size* be the length of *S*.
5. If *position* < 0 or *position* ≥ *size*, return **NaN**.
6. Return a value of Number type, whose value is the numeric value of the code unit at index *position* within the String *S*.

NOTE 2 The **`charCodeAt`** function is intentionally generic; it does not require that its **this** value be a String object. Therefore it can be transferred to other kinds of objects for use as a method.

21.1.3.3 String.prototype.codePointAt (*pos*)

NOTE 1 Returns a nonnegative integer Number less than or equal to 0x10FFFF that is the code point value of the UTF-16 encoded code point (6.1.4) starting at the string element at index *pos* within the String resulting from converting this object to a String. If there is no element at that index, the result is **undefined**. If a valid UTF-16 surrogate pair does not begin at *pos*, the result is the code unit at *pos*.

When the **`codePointAt`** method is called with one argument *pos*, the following steps are taken:

1. Let *O* be ? RequireObjectCoercible(**this** value).
2. Let *S* be ? ToString(*O*).
3. Let *position* be ? ToInteger(*pos*).
4. Let *size* be the length of *S*.
5. If *position* < 0 or *position* ≥ *size*, return **undefined**.
6. Let *cp* be ! CodePointAt(*S*, *position*).
7. Return *cp*.[[CodePoint]].

NOTE 2 The **`codePointAt`** function is intentionally generic; it does not require that its **this** value be a String object. Therefore it can be transferred to other kinds of objects for use as a method.

21.1.3.4 String.prototype.concat (...*args*)

NOTE 1 When the **`concat`** method is called it returns the String value consisting of the code units of the **this** object (converted to a String) followed by the code units of each of the arguments converted to a String. The result is a String value, not a String object.

When the **`concat`** method is called with zero or more arguments, the following steps are taken:

1. Let *O* be ? RequireObjectCoercible(**this** value).
2. Let *S* be ? ToString(*O*).
3. Let *args* be a List whose elements are the arguments passed to this function.
4. Let *R* be *S*.
5. Repeat, while *args* is not empty
    a. Remove the first element from *args* and let *next* be the value of that element.
    b. Let *nextString* be ? ToString(*next*).
    c. Set *R* to the string-concatenation of the previous value of *R* and *nextString*.
6. Return *R*.

The **"length"** property of the **`concat`** method is 1.

NOTE 2 The **`concat`** function is intentionally generic; it does not require that its **this** value be a String object. Therefore it can be transferred to other kinds of objects for use as a method.

21.1.3.5 String.prototype.constructor

The initial value of **`String.prototype.constructor`** is %String%.

21.1.3.6 String.prototype.endsWith (*searchString* [, *endPosition*])

The following steps are taken:

1. Let *O* be ? RequireObjectCoercible(**this** value).
2. Let *S* be ? ToString(*O*).
3. Let *isRegExp* be ? IsRegExp(*searchString*).
4. If *isRegExp* is **true**, throw a **TypeError** exception.
5. Let *searchStr* be ? ToString(*searchString*).
6. Let *len* be the length of *S*.
7. If *endPosition* is **undefined**, let *pos* be *len*; else let *pos* be ? ToInteger(*endPosition*).
8. Let *end* be min(max(*pos*, 0), *len*).
9. Let *searchLength* be the length of *searchStr*.
10. Let *start* be *end* - *searchLength*.
11. If *start* is less than 0, return **false**.
12. If the sequence of code units of *S* starting at *start* of length *searchLength* is the same as the full code unit sequence of *searchStr*, return **true**.
13. Otherwise, return **false**.

NOTE 1 Returns **true** if the sequence of code units of *searchString* converted to a String is the same as the corresponding code units of this object (converted to a String) starting at *endPosition* - length(this). Otherwise returns **false**.

NOTE 2 Throwing an exception if the first argument is a RegExp is specified in order to allow future editions to define extensions that allow such argument values.

NOTE 3 The **`endsWith`** function is intentionally generic; it does not require that its **this** value be a String object. Therefore, it can be transferred to other kinds of objects for use as a method.

21.1.3.7 String.prototype.includes (*searchString* [, *position*])

The **`includes`** method takes two arguments, *searchString* and *position*, and performs the following steps:

1. Let *O* be ? RequireObjectCoercible(**this** value).
2. Let *S* be ? ToString(*O*).
3. Let *isRegExp* be ? IsRegExp(*searchString*).
4. If *isRegExp* is **true**, throw a **TypeError** exception.
5. Let *searchStr* be ? ToString(*searchString*).
6. Let *pos* be ? ToInteger(*position*).
7. Assert: If *position* is **undefined**, then *pos* is 0.
8. Let *len* be the length of *S*.
9. Let *start* be min(max(*pos*, 0), *len*).
10. Let *searchLen* be the length of *searchStr*.
11. If there exists any integer *k* not smaller than *start* such that *k* + *searchLen* is not greater than *len*, and for all nonnegative integers *j* less than *searchLen*, the code unit at index *k* + *j* within *S* is the same as the code unit at index *j* within *searchStr*, return **true**; but if there is no such integer *k*, return **false**.

NOTE 1 If *searchString* appears as a substring of the result of converting this object to a String, at one or more indices that are greater than or equal to *position*, return **true**; otherwise, returns **false**. If *position* is **undefined**, 0 is assumed, so as to search all of the String.

NOTE 2 Throwing an exception if the first argument is a RegExp is specified in order to allow future editions to define extensions that allow such argument values.

NOTE 3 The **`includes`** function is intentionally generic; it does not require that its **this** value be a String object. Therefore, it can be transferred to other kinds of objects for use as a method.

21.1.3.8 String.prototype.indexOf (*searchString* [, *position*])

NOTE 1 If *searchString* appears as a substring of the result of converting this object to a String, at one or more indices that are greater than or equal to *position*, then the smallest such index is returned; otherwise, -1 is returned. If *position* is **undefined**, 0 is assumed, so as to search all of the String.

The **`indexOf`** method takes two arguments, *searchString* and *position*, and performs the following steps:

1. Let *O* be ? RequireObjectCoercible(**this** value).
2. Let *S* be ? ToString(*O*).
3. Let *searchStr* be ? ToString(*searchString*).
4. Let *pos* be ? ToInteger(*position*).
5. Assert: If *position* is **undefined**, then *pos* is 0.

6. Let *len* be the length of *S*.
7. Let *start* be min(max(*pos*, 0), *len*).
8. Let *searchLen* be the length of *searchStr*.
9. Return the smallest possible integer *k* not smaller than *start* such that *k* + *searchLen* is not greater than *len*, and for all nonnegative integers *j* less than *searchLen*, the code unit at index *k* + *j* within *S* is the same as the code unit at index *j* within *searchStr*; but if there is no such integer *k*, return the value -1.

NOTE 2 The **`indexOf`** function is intentionally generic; it does not require that its **this** value be a String object. Therefore, it can be transferred to other kinds of objects for use as a method.

21.1.3.9 String.prototype.lastIndexOf (*searchString* [, *position*])

NOTE 1 If *searchString* appears as a substring of the result of converting this object to a String at one or more indices that are smaller than or equal to *position*, then the greatest such index is returned; otherwise, -1 is returned. If *position* is **undefined**, the length of the String value is assumed, so as to search all of the String.

The **`lastIndexOf`** method takes two arguments, *searchString* and *position*, and performs the following steps:

1. Let *O* be ? RequireObjectCoercible(**this** value).
2. Let *S* be ? ToString(*O*).
3. Let *searchStr* be ? ToString(*searchString*).
4. Let *numPos* be ? ToNumber(*position*).
5. Assert: If *position* is **undefined**, then *numPos* is **NaN**.
6. If *numPos* is **NaN**, let *pos* be +∞; otherwise, let *pos* be ! ToInteger(*numPos*).
7. Let *len* be the length of *S*.
8. Let *start* be min(max(*pos*, 0), *len*).
9. Let *searchLen* be the length of *searchStr*.
10. Return the largest possible nonnegative integer *k* not larger than *start* such that *k* + *searchLen* is not greater than *len*, and for all nonnegative integers *j* less than *searchLen*, the code unit at index *k* + *j* within *S* is the same as the code unit at index *j* within *searchStr*; but if there is no such integer *k*, return the value -1.

NOTE 2 The **`lastIndexOf`** function is intentionally generic; it does not require that its **this** value be a String object. Therefore, it can be transferred to other kinds of objects for use as a method.

21.1.3.10 String.prototype.localeCompare (*that* [, *reserved1* [, *reserved2*]])

An ECMAScript implementation that includes the ECMA-402 Internationalization API must implement the **`localeCompare`** method as specified in the ECMA-402 specification. If an ECMAScript implementation does not include the ECMA-402 API the following specification of the **`localeCompare`** method is used.

When the **`localeCompare`** method is called with argument *that*, it returns a Number other than **NaN** that represents the result of a locale-sensitive String comparison of the **this** value (converted to a String) with *that* (converted to a String). The two Strings are *S* and *That*. The two Strings are compared in an implementation-defined fashion. The result is intended to order String values in the sort order specified by a host default locale, and will be negative, zero, or positive, depending on whether *S* comes before *That* in the sort order, the Strings are equal, or *S*

comes after *That* in the sort order, respectively.

Before performing the comparisons, the following steps are performed to prepare the Strings:

1. Let *O* be ? RequireObjectCoercible(**this** value).
2. Let *S* be ? ToString(*O*).
3. Let *That* be ? ToString(*that*).

The meaning of the optional second and third parameters to this method are defined in the ECMA-402 specification; implementations that do not include ECMA-402 support must not assign any other interpretation to those parameter positions.

The **`localeCompare`** method, if considered as a function of two arguments **this** and *that*, is a consistent comparison function (as defined in 22.1.3.27) on the set of all Strings.

The actual return values are implementation-defined to permit implementers to encode additional information in the value, but the function is required to define a total ordering on all Strings. This function must treat Strings that are canonically equivalent according to the Unicode standard as identical and must return **`0`** when comparing Strings that are considered canonically equivalent.

NOTE 1 The **`localeCompare`** method itself is not directly suitable as an argument to **`Array.prototype.sort`** because the latter requires a function of two arguments.

NOTE 2 This function is intended to rely on whatever language-sensitive comparison functionality is available to the ECMAScript environment from the host environment, and to compare according to the rules of the host environment's current locale. However, regardless of the host provided comparison capabilities, this function must treat Strings that are canonically equivalent according to the Unicode standard as identical. It is recommended that this function should not honour Unicode compatibility equivalences or decompositions. For a definition and discussion of canonical equivalence see the Unicode Standard, chapters 2 and 3, as well as Unicode Standard Annex #15, Unicode Normalization Forms (https://unicode.org/reports/tr15/) and Unicode Technical Note #5, Canonical Equivalence in Applications (https://www.unicode.org/notes/tn5/). Also see Unicode Technical Standard #10, Unicode Collation Algorithm (https://unicode.org/reports/tr10/).

NOTE 3 The **`localeCompare`** function is intentionally generic; it does not require that its **this** value be a String object. Therefore, it can be transferred to other kinds of objects for use as a method.

21.1.3.11 String.prototype.match (*regexp*)

When the **`match`** method is called with argument *regexp*, the following steps are taken:

1. Let *O* be ? RequireObjectCoercible(**this** value).
2. If *regexp* is neither **undefined** nor **null**, then
    a. Let *matcher* be ? GetMethod(*regexp*, @@match).
    b. If *matcher* is not **undefined**, then
        i. Return ? Call(*matcher*, *regexp*, « *O* »).

3. Let *S* be ? ToString(*O*).
4. Let *rx* be ? RegExpCreate(*regexp*, **undefined**).
5. Return ? Invoke(*rx*, @@match, « *S* »).

NOTE The **`match`** function is intentionally generic; it does not require that its **this** value be a String object. Therefore, it can be transferred to other kinds of objects for use as a method.

21.1.3.12 String.prototype.matchAll (*regexp*)

Performs a regular expression match of the String representing the **this** value against *regexp* and returns an iterator. Each iteration result's value is an Array object containing the results of the match, or **null** if the String did not match.

When the **`matchAll`** method is called, the following steps are taken:

1. Let *O* be ? RequireObjectCoercible(**this** value).
2. If *regexp* is neither **undefined** nor **null**, then
   a. Let *isRegExp* be ? IsRegExp(*regexp*).
   b. If *isRegExp* is **true**, then
      i. Let *flags* be ? Get(*regexp*, **"flags"**).
      ii. Perform ? RequireObjectCoercible(*flags*).
      iii. If ? ToString(*flags*) does not contain **"g"**, throw a **TypeError** exception.
   c. Let *matcher* be ? GetMethod(*regexp*, @@matchAll).
   d. If *matcher* is not **undefined**, then
      i. Return ? Call(*matcher*, *regexp*, « *O* »).
3. Let *S* be ? ToString(*O*).
4. Let *rx* be ? RegExpCreate(*regexp*, **"g"**).
5. Return ? Invoke(*rx*, @@matchAll, « *S* »).

NOTE 1 The **`matchAll`** function is intentionally generic, it does not require that its **this** value be a String object. Therefore, it can be transferred to other kinds of objects for use as a method.

NOTE 2 Similarly to **`String.prototype.split`**, **`String.prototype.matchAll`** is designed to typically act without mutating its inputs.

21.1.3.13 String.prototype.normalize ([*form*])

When the **`normalize`** method is called with one argument *form*, the following steps are taken:

1. Let *O* be ? RequireObjectCoercible(**this** value).
2. Let *S* be ? ToString(*O*).
3. If *form* is **undefined**, let *f* be **"NFC"**.
4. Else, let *f* be ? ToString(*form*).
5. If *f* is not one of **"NFC"**, **"NFD"**, **"NFKC"**, or **"NFKD"**, throw a **RangeError** exception.
6. Let *ns* be the String value that is the result of normalizing *S* into the normalization form named by *f* as specified in https://unicode.org/reports/tr15/.
7. Return *ns*.

NOTE The **normalize** function is intentionally generic; it does not require that its **this** value be a String object. Therefore it can be transferred to other kinds of objects for use as a method.

21.1.3.14 String.prototype.padEnd (*maxLength* [, *fillString*])

When the **padEnd** method is called, the following steps are taken:

1. Let *O* be ? RequireObjectCoercible(**this** value).
2. Return ? StringPad(*O*, *maxLength*, *fillString*, end).

21.1.3.15 String.prototype.padStart (*maxLength* [, *fillString*])

When the **padStart** method is called, the following steps are taken:

1. Let *O* be ? RequireObjectCoercible(**this** value).
2. Return ? StringPad(*O*, *maxLength*, *fillString*, start).

21.1.3.15.1 Runtime Semantics: StringPad (*O*, *maxLength*, *fillString*, *placement*)

When the abstract operation StringPad is called with arguments *O*, *maxLength*, *fillString*, and *placement*, the following steps are taken:

1. Assert: *placement* is start or end.
2. Let *S* be ? ToString(*O*).
3. Let *intMaxLength* be ? ToLength(*maxLength*).
4. Let *stringLength* be the length of *S*.
5. If *intMaxLength* is not greater than *stringLength*, return *S*.
6. If *fillString* is **undefined**, let *filler* be the String value consisting solely of the code unit 0x0020 (SPACE).
7. Else, let *filler* be ? ToString(*fillString*).
8. If *filler* is the empty String, return *S*.
9. Let *fillLen* be *intMaxLength* - *stringLength*.
10. Let *truncatedStringFiller* be the String value consisting of repeated concatenations of *filler* truncated to length *fillLen*.
11. If *placement* is start, return the string-concatenation of *truncatedStringFiller* and *S*.
12. Else, return the string-concatenation of *S* and *truncatedStringFiller*.

NOTE 1 The argument *maxLength* will be clamped such that it can be no smaller than the length of *S*.

NOTE 2 The argument *fillString* defaults to **" "** (the String value consisting of the code unit 0x0020 SPACE).

21.1.3.16 String.prototype.repeat (*count*)

The following steps are taken:

1. Let *O* be ? RequireObjectCoercible(**this** value).
2. Let *S* be ? ToString(*O*).

3. Let *n* be ? ToInteger(*count*).
4. If *n* < 0, throw a **RangeError** exception.
5. If *n* is +∞, throw a **RangeError** exception.
6. If *n* is 0, return the empty String.
7. Return the String value that is made from *n* copies of *S* appended together.

NOTE 1 This method creates the String value consisting of the code units of the **this** object (converted to String) repeated *count* times.

NOTE 2 The `repeat` function is intentionally generic; it does not require that its **this** value be a String object. Therefore, it can be transferred to other kinds of objects for use as a method.

21.1.3.17 String.prototype.replace (*searchValue*, *replaceValue*)

When the `replace` method is called with arguments *searchValue* and *replaceValue*, the following steps are taken:

1. Let *O* be ? RequireObjectCoercible(**this** value).
2. If *searchValue* is neither **undefined** nor **null**, then
   a. Let *replacer* be ? GetMethod(*searchValue*, @@replace).
   b. If *replacer* is not **undefined**, then
      i. Return ? Call(*replacer*, *searchValue*, « *O*, *replaceValue* »).
3. Let *string* be ? ToString(*O*).
4. Let *searchString* be ? ToString(*searchValue*).
5. Let *functionalReplace* be IsCallable(*replaceValue*).
6. If *functionalReplace* is **false**, then
   a. Set *replaceValue* to ? ToString(*replaceValue*).
7. Search *string* for the first occurrence of *searchString* and let *pos* be the index within *string* of the first code unit of the matched substring and let *matched* be *searchString*. If no occurrences of *searchString* were found, return *string*.
8. If *functionalReplace* is **true**, then
   a. Let *replValue* be ? Call(*replaceValue*, **undefined**, « *matched*, *pos*, *string* »).
   b. Let *replStr* be ? ToString(*replValue*).
9. Else,
   a. Let *captures* be a new empty List.
   b. Let *replStr* be ! GetSubstitution(*matched*, *string*, *pos*, *captures*, **undefined**, *replaceValue*).
10. Let *tailPos* be *pos* + the number of code units in *matched*.
11. Let *newString* be the string-concatenation of the first *pos* code units of *string*, *replStr*, and the trailing substring of *string* starting at index *tailPos*. If *pos* is 0, the first element of the concatenation will be the empty String.
12. Return *newString*.

NOTE The `replace` function is intentionally generic; it does not require that its **this** value be a String object. Therefore, it can be transferred to other kinds of objects for use as a method.

21.1.3.17.1 Runtime Semantics: GetSubstitution (*matched*, *str*, *position*, *captures*, *namedCaptures*, *replacement*)

The abstract operation GetSubstitution performs the following steps:

1. Assert: Type(*matched*) is String.
2. Let *matchLength* be the number of code units in *matched*.
3. Assert: Type(*str*) is String.
4. Let *stringLength* be the number of code units in *str*.
5. Assert: ! IsNonNegativeInteger(*position*) is **true**.
6. Assert: *position* ≤ *stringLength*.
7. Assert: *captures* is a possibly empty List of Strings.
8. Assert: Type(*replacement*) is String.
9. Let *tailPos* be *position* + *matchLength*.
10. Let *m* be the number of elements in *captures*.
11. Let *result* be the String value derived from *replacement* by copying code unit elements from *replacement* to *result* while performing replacements as specified in Table 52. These **$** replacements are done left-to-right, and, once such a replacement is performed, the new replacement text is not subject to further replacements.
12. Return *result*.

Table 52: Replacement Text Symbol Substitutions

Code units	Unicode Characters	Replacement text
0x0024, 0x0024	**$$**	**$**
0x0024, 0x0026	**$&**	*matched*
0x0024, 0x0060	**$`**	If *position* is 0, the replacement is the empty String. Otherwise the replacement is the substring of *str* that starts at index 0 and whose last code unit is at index *position* - 1.
0x0024, 0x0027	**$'**	If *tailPos* ≥ *stringLength*, the replacement is the empty String. Otherwise the replacement is the substring of *str* that starts at index *tailPos* and continues to the end of *str*.
0x0024, N Where 0x0031 ≤ N ≤ 0x0039	**$n** where **n** is one of **1 2 3 4 5 6 7 8 9** and **$n** is not followed by a decimal digit	The nth element of *captures*, where *n* is a single digit in the range 1 to 9. If *n* ≤ *m* and the nth element of *captures* is **undefined**, use the empty String instead. If *n* > *m*, no replacement is done.
0x0024, N, N Where 0x0030 ≤ N ≤ 0x0039	**$nn** where **n** is one of **0 1 2 3 4 5 6 7 8 9**	The nn^{th} element of *captures*, where *nn* is a two-digit decimal number in the range 01 to 99. If *nn* ≤ *m* and the nn^{th} element of *captures* is **undefined**, use the empty String instead. If *nn* is 00 or *nn* > *m*, no replacement is done.
0x0024, 0x003C	**$<**	1. If *namedCaptures* is **undefined**, the replacement text is the String "$<".

		2. Else, a. Assert: Type(*namedCaptures*) is Object. b. Scan until the next **>** U+003E (GREATER-THAN SIGN). c. If none is found, the replacement text is the String **"$<"**. d. Else, i. Let *groupName* be the enclosed substring. ii. Let *capture* be ? Get(*namedCaptures*, *groupName*). iii. If *capture* is **undefined**, replace the text through **>** with the empty String. iv. Otherwise, replace the text through **>** with ? ToString(*capture*).
0x0024	**$** in any context that does not match any of the above.	**$**

21.1.3.18 String.prototype.search (*regexp*)

When the **`search`** method is called with argument *regexp*, the following steps are taken:

1. Let *O* be ? RequireObjectCoercible(**this** value).
2. If *regexp* is neither **undefined** nor **null**, then
   a. Let *searcher* be ? GetMethod(*regexp*, @@search).
   b. If *searcher* is not **undefined**, then
      i. Return ? Call(*searcher*, *regexp*, « *O* »).
3. Let *string* be ? ToString(*O*).
4. Let *rx* be ? RegExpCreate(*regexp*, **undefined**).
5. Return ? Invoke(*rx*, @@search, « *string* »).

NOTE The **`search`** function is intentionally generic; it does not require that its **this** value be a String object. Therefore, it can be transferred to other kinds of objects for use as a method.

21.1.3.19 String.prototype.slice (*start*, *end*)

The **`slice`** method takes two arguments, *start* and *end*, and returns a substring of the result of converting this object to a String, starting from index *start* and running to, but not including, index *end* (or through the end of the String if *end* is **undefined**). If *start* is negative, it is treated as *sourceLength* + *start* where *sourceLength* is the length of the String. If *end* is negative, it is treated as *sourceLength* + *end* where *sourceLength* is the length of the String. The result is a String value, not a String object. The following steps are taken:

1. Let *O* be ? RequireObjectCoercible(**this** value).
2. Let *S* be ? ToString(*O*).
3. Let *len* be the length of *S*.
4. Let *intStart* be ? ToInteger(*start*).
5. If *end* is **undefined**, let *intEnd* be *len*; else let *intEnd* be ? ToInteger(*end*).
6. If *intStart* < 0, let *from* be max(*len* + *intStart*, 0); otherwise let *from* be min(*intStart*, *len*).
7. If *intEnd* < 0, let *to* be max(*len* + *intEnd*, 0); otherwise let *to* be min(*intEnd*, *len*).

8. Let *span* be max(*to* - *from*, 0).
9. Return the String value containing *span* consecutive code units from *S* beginning with the code unit at index *from*.

NOTE The **`slice`** function is intentionally generic; it does not require that its **this** value be a String object. Therefore it can be transferred to other kinds of objects for use as a method.

21.1.3.20 String.prototype.split (*separator*, *limit*)

Returns an Array object into which substrings of the result of converting this object to a String have been stored. The substrings are determined by searching from left to right for occurrences of *separator*; these occurrences are not part of any substring in the returned array, but serve to divide up the String value. The value of *separator* may be a String of any length or it may be an object, such as a RegExp, that has a @@split method.

When the **`split`** method is called, the following steps are taken:

1. Let *O* be ? RequireObjectCoercible(**this** value).
2. If *separator* is neither **undefined** nor **null**, then
   a. Let *splitter* be ? GetMethod(*separator*, @@split).
   b. If *splitter* is not **undefined**, then
      i. Return ? Call(*splitter*, *separator*, « *O*, *limit* »).
3. Let *S* be ? ToString(*O*).
4. Let *A* be ! ArrayCreate(0).
5. Let *lengthA* be 0.
6. If *limit* is **undefined**, let *lim* be 2^{32} - 1; else let *lim* be ? ToUint32(*limit*).
7. Let *s* be the length of *S*.
8. Let *p* be 0.
9. Let *R* be ? ToString(*separator*).
10. If *lim* = 0, return *A*.
11. If *separator* is **undefined**, then
    a. Perform ! CreateDataPropertyOrThrow(*A*, **"0"**, *S*).
    b. Return *A*.
12. If *s* = 0, then
    a. Let *z* be SplitMatch(*S*, 0, *R*).
    b. If *z* is not **false**, return *A*.
    c. Perform ! CreateDataPropertyOrThrow(*A*, **"0"**, *S*).
    d. Return *A*.
13. Let *q* be *p*.
14. Repeat, while *q* ≠ *s*
    a. Let *e* be SplitMatch(*S*, *q*, *R*).
    b. If *e* is **false**, set *q* to *q* + 1.
    c. Else,
       i. Assert: *e* is an integer index ≤ *s*.
       ii. If *e* = *p*, set *q* to *q* + 1.
       iii. Else,
          1. Let *T* be the String value equal to the substring of *S* consisting of the code units at indices *p* (inclusive) through *q* (exclusive).
          2. Perform ! CreateDataPropertyOrThrow(*A*, ! ToString(*lengthA*), *T*).

3. Set *lengthA* to *lengthA* + 1.
4. If *lengthA* = *lim*, return *A*.
5. Set *p* to *e*.
6. Set *q* to *p*.

15. Let *T* be the String value equal to the substring of *S* consisting of the code units at indices *p* (inclusive) through *s* (exclusive).
16. Perform ! CreateDataPropertyOrThrow(*A*, ! ToString(*lengthA*), *T*).
17. Return *A*.

NOTE 1 The value of *separator* may be an empty String. In this case, *separator* does not match the empty substring at the beginning or end of the input String, nor does it match the empty substring at the end of the previous separator match. If *separator* is the empty String, the String is split up into individual code unit elements; the length of the result array equals the length of the String, and each substring contains one code unit.

If the **this** object is (or converts to) the empty String, the result depends on whether *separator* can match the empty String. If it can, the result array contains no elements. Otherwise, the result array contains one element, which is the empty String.

If *separator* is **undefined**, then the result array contains just one String, which is the **this** value (converted to a String). If *limit* is not **undefined**, then the output array is truncated so that it contains no more than *limit* elements.

NOTE 2 The `split` function is intentionally generic; it does not require that its **this** value be a String object. Therefore, it can be transferred to other kinds of objects for use as a method.

21.1.3.20.1 Runtime Semantics: SplitMatch (*S*, *q*, *R*)

The abstract operation SplitMatch takes three parameters, a String *S*, an integer *q*, and a String *R*, and performs the following steps in order to return either **false** or the end index of a match:

1. Assert: Type(*R*) is String.
2. Let *r* be the number of code units in *R*.
3. Let *s* be the number of code units in *S*.
4. If *q* + *r* > *s*, return **false**.
5. If there exists an integer *i* between 0 (inclusive) and *r* (exclusive) such that the code unit at index *q* + *i* within *S* is different from the code unit at index *i* within *R*, return **false**.
6. Return *q* + *r*.

21.1.3.21 String.prototype.startsWith (*searchString* [, *position*])

The following steps are taken:

1. Let *O* be ? RequireObjectCoercible(**this** value).
2. Let *S* be ? ToString(*O*).
3. Let *isRegExp* be ? IsRegExp(*searchString*).
4. If *isRegExp* is **true**, throw a **TypeError** exception.
5. Let *searchStr* be ? ToString(*searchString*).

6. Let *pos* be ? ToInteger(*position*).
7. Assert: If *position* is **undefined**, then *pos* is 0.
8. Let *len* be the length of *S*.
9. Let *start* be min(max(*pos*, 0), *len*).
10. Let *searchLength* be the length of *searchStr*.
11. If *searchLength* + *start* is greater than *len*, return **false**.
12. If the sequence of code units of *S* starting at *start* of length *searchLength* is the same as the full code unit sequence of *searchStr*, return **true**.
13. Otherwise, return **false**.

NOTE 1 This method returns **true** if the sequence of code units of *searchString* converted to a String is the same as the corresponding code units of this object (converted to a String) starting at index *position*. Otherwise returns **false**.

NOTE 2 Throwing an exception if the first argument is a RegExp is specified in order to allow future editions to define extensions that allow such argument values.

NOTE 3 The `startsWith` function is intentionally generic; it does not require that its **this** value be a String object. Therefore, it can be transferred to other kinds of objects for use as a method.

21.1.3.22 String.prototype.substring (*start*, *end*)

The `substring` method takes two arguments, *start* and *end*, and returns a substring of the result of converting this object to a String, starting from index *start* and running to, but not including, index *end* of the String (or through the end of the String if *end* is **undefined**). The result is a String value, not a String object.

If either argument is **NaN** or negative, it is replaced with zero; if either argument is larger than the length of the String, it is replaced with the length of the String.

If *start* is larger than *end*, they are swapped.

The following steps are taken:

1. Let *O* be ? RequireObjectCoercible(**this** value).
2. Let *S* be ? ToString(*O*).
3. Let *len* be the length of *S*.
4. Let *intStart* be ? ToInteger(*start*).
5. If *end* is **undefined**, let *intEnd* be *len*; else let *intEnd* be ? ToInteger(*end*).
6. Let *finalStart* be min(max(*intStart*, 0), *len*).
7. Let *finalEnd* be min(max(*intEnd*, 0), *len*).
8. Let *from* be min(*finalStart*, *finalEnd*).
9. Let *to* be max(*finalStart*, *finalEnd*).
10. Return the String value whose length is *to* - *from*, containing code units from *S*, namely the code units with indices *from* through *to* - 1, in ascending order.

NOTE The **`substring`** function is intentionally generic; it does not require that its **this** value be a String object. Therefore, it can be transferred to other kinds of objects for use as a method.

21.1.3.23 String.prototype.toLocaleLowerCase ([*reserved1* [, *reserved2*]])

An ECMAScript implementation that includes the ECMA-402 Internationalization API must implement the **`toLocaleLowerCase`** method as specified in the ECMA-402 specification. If an ECMAScript implementation does not include the ECMA-402 API the following specification of the **`toLocaleLowerCase`** method is used.

This function interprets a String value as a sequence of UTF-16 encoded code points, as described in 6.1.4.

This function works exactly the same as **`toLowerCase`** except that its result is intended to yield the correct result for the host environment's current locale, rather than a locale-independent result. There will only be a difference in the few cases (such as Turkish) where the rules for that language conflict with the regular Unicode case mappings.

The meaning of the optional parameters to this method are defined in the ECMA-402 specification; implementations that do not include ECMA-402 support must not use those parameter positions for anything else.

NOTE The **`toLocaleLowerCase`** function is intentionally generic; it does not require that its **this** value be a String object. Therefore, it can be transferred to other kinds of objects for use as a method.

21.1.3.24 String.prototype.toLocaleUpperCase ([*reserved1* [, *reserved2*]])

An ECMAScript implementation that includes the ECMA-402 Internationalization API must implement the **`toLocaleUpperCase`** method as specified in the ECMA-402 specification. If an ECMAScript implementation does not include the ECMA-402 API the following specification of the **`toLocaleUpperCase`** method is used.

This function interprets a String value as a sequence of UTF-16 encoded code points, as described in 6.1.4.

This function works exactly the same as **`toUpperCase`** except that its result is intended to yield the correct result for the host environment's current locale, rather than a locale-independent result. There will only be a difference in the few cases (such as Turkish) where the rules for that language conflict with the regular Unicode case mappings.

The meaning of the optional parameters to this method are defined in the ECMA-402 specification; implementations that do not include ECMA-402 support must not use those parameter positions for anything else.

NOTE The **`toLocaleUpperCase`** function is intentionally generic; it does not require that its **this** value be a String object. Therefore, it can be transferred to other kinds of objects for use as a method.

21.1.3.25 String.prototype.toLowerCase ( )

This function interprets a String value as a sequence of UTF-16 encoded code points, as described in 6.1.4. The following steps are taken:

1. Let *O* be ? RequireObjectCoercible(**this** value).

2. Let *S* be ? ToString(*O*).
3. Let *sText* be ! UTF16DecodeString(*S*).
4. Let *lowerText* be the result of toLowercase(*sText*), according to the Unicode Default Case Conversion algorithm.
5. Let *L* be ! UTF16Encode(*lowerText*).
6. Return *L*.

The result must be derived according to the locale-insensitive case mappings in the Unicode Character Database (this explicitly includes not only the UnicodeData.txt file, but also all locale-insensitive mappings in the SpecialCasings.txt file that accompanies it).

NOTE 1 The case mapping of some code points may produce multiple code points. In this case the result String may not be the same length as the source String. Because both **`toUpperCase`** and **`toLowerCase`** have context-sensitive behaviour, the functions are not symmetrical. In other words, **`s.toUpperCase().toLowerCase()`** is not necessarily equal to **`s.toLowerCase()`**.

NOTE 2 The **`toLowerCase`** function is intentionally generic; it does not require that its **this** value be a String object. Therefore, it can be transferred to other kinds of objects for use as a method.

21.1.3.26 String.prototype.toString ( )

When the **`toString`** method is called, the following steps are taken:

1. Return ? thisStringValue(**this** value).

NOTE For a String object, the **`toString`** method happens to return the same thing as the **`valueOf`** method.

21.1.3.27 String.prototype.toUpperCase ( )

This function interprets a String value as a sequence of UTF-16 encoded code points, as described in 6.1.4.

This function behaves in exactly the same way as **`String.prototype.toLowerCase`**, except that the String is mapped using the toUppercase algorithm of the Unicode Default Case Conversion.

NOTE The **`toUpperCase`** function is intentionally generic; it does not require that its **this** value be a String object. Therefore, it can be transferred to other kinds of objects for use as a method.

21.1.3.28 String.prototype.trim ( )

This function interprets a String value as a sequence of UTF-16 encoded code points, as described in 6.1.4.

The following steps are taken:

1. Let *S* be the **this** value.
2. Return ? TrimString(*S*, start+end).

NOTE The **`trim`** function is intentionally generic; it does not require that its **this** value be a String object. Therefore, it can be transferred to other kinds of objects for use as a method.

21.1.3.28.1 Runtime Semantics: TrimString (*string*, *where*)

The abstract operation TrimString is called with arguments *string* and *where*, and interprets the String value *string* as a sequence of UTF-16 encoded code points, as described in 6.1.4. It performs the following steps:

1. Let *str* be ? RequireObjectCoercible(*string*).
2. Let *S* be ? ToString(*str*).
3. If *where* is start, let *T* be the String value that is a copy of *S* with leading white space removed.
4. Else if *where* is end, let *T* be the String value that is a copy of *S* with trailing white space removed.
5. Else,
    a. Assert: *where* is start+end.
    b. Let *T* be the String value that is a copy of *S* with both leading and trailing white space removed.
6. Return *T*.

The definition of white space is the union of *WhiteSpace* and *LineTerminator*. When determining whether a Unicode code point is in Unicode general category "Space_Separator" ("Zs"), code unit sequences are interpreted as UTF-16 encoded code point sequences as specified in 6.1.4.

21.1.3.29 String.prototype.trimEnd ( )

This function interprets a String value as a sequence of UTF-16 encoded code points, as described in 6.1.4.

The following steps are taken:

1. Let *S* be the **this** value.
2. Return ? TrimString(*S*, end).

NOTE The **`trimEnd`** function is intentionally generic; it does not require that its **this** value be a String object. Therefore, it can be transferred to other kinds of objects for use as a method.

21.1.3.30 String.prototype.trimStart ( )

This function interprets a String value as a sequence of UTF-16 encoded code points, as described in 6.1.4.

The following steps are taken:

1. Let *S* be the **this** value.
2. Return ? TrimString(*S*, start).

NOTE The **`trimStart`** function is intentionally generic; it does not require that its **this** value be a String object. Therefore, it can be transferred to other kinds of objects for use as a method.

21.1.3.31 String.prototype.valueOf ( )

When the **`valueOf`** method is called, the following steps are taken:

1. Return ? thisStringValue(**this** value).

21.1.3.32 String.prototype [@@iterator] ( )

When the **`@@iterator`** method is called it returns an Iterator object (25.1.1.2) that iterates over the code points of a String value, returning each code point as a String value. The following steps are taken:

1. Let *O* be ? RequireObjectCoercible(**this** value).
2. Let *S* be ? ToString(*O*).
3. Return CreateStringIterator(*S*).

The value of the **"name"** property of this function is **"[Symbol.iterator]"**.

21.1.4 Properties of String Instances

String instances are String exotic objects and have the internal methods specified for such objects. String instances inherit properties from the String prototype object. String instances also have a [[StringData]] internal slot.

String instances have a **"length"** property, and a set of enumerable properties with integer-indexed names.

21.1.4.1 length

The number of elements in the String value represented by this String object.

Once a String object is initialized, this property is unchanging. It has the attributes { [[Writable]]: **false**, [[Enumerable]]: **false**, [[Configurable]]: **false** }.

21.1.5 String Iterator Objects

A String Iterator is an object, that represents a specific iteration over some specific String instance object. There is not a named constructor for String Iterator objects. Instead, String iterator objects are created by calling certain methods of String instance objects.

21.1.5.1 CreateStringIterator (*string*)

Several methods of String objects return Iterator objects. The abstract operation CreateStringIterator with argument *string* is used to create such iterator objects. It performs the following steps:

1. Assert: Type(*string*) is String.
2. Let *iterator* be OrdinaryObjectCreate(%StringIteratorPrototype%, « [[IteratedString]], [[StringNextIndex]] »).
3. Set *iterator*.[[IteratedString]] to *string*.
4. Set *iterator*.[[StringNextIndex]] to 0.
5. Return *iterator*.

21.1.5.2 The %StringIteratorPrototype% Object

The *%StringIteratorPrototype%* object:

- has properties that are inherited by all String Iterator Objects.
- is an ordinary object.
- has a [[Prototype]] internal slot whose value is %IteratorPrototype%.
- has the following properties:

21.1.5.2.1 %StringIteratorPrototype%.next ( )

1. Let *O* be the **this** value.
2. If Type(*O*) is not Object, throw a **TypeError** exception.
3. If *O* does not have all of the internal slots of a String Iterator Instance (21.1.5.3), throw a **TypeError** exception.
4. Let *s* be *O*.[[IteratedString]].
5. If *s* is **undefined**, return CreateIterResultObject(**undefined**, **true**).
6. Let *position* be *O*.[[StringNextIndex]].
7. Let *len* be the length of *s*.
8. If *position* ≥ *len*, then
    a. Set *O*.[[IteratedString]] to **undefined**.
    b. Return CreateIterResultObject(**undefined**, **true**).
9. Let *cp* be ! CodePointAt(*s*, *position*).
10. Let *resultString* be the String value containing *cp*.[[CodeUnitCount]] consecutive code units from *s* beginning with the code unit at index *position*.
11. Set *O*.[[StringNextIndex]] to *position* + *cp*.[[CodeUnitCount]].
12. Return CreateIterResultObject(*resultString*, **false**).

21.1.5.2.2 %StringIteratorPrototype% [@@toStringTag]

The initial value of the @@toStringTag property is the String value **"String Iterator"**.

This property has the attributes { [[Writable]]: **false**, [[Enumerable]]: **false**, [[Configurable]]: **true** }.

21.1.5.3 Properties of String Iterator Instances

String Iterator instances are ordinary objects that inherit properties from the %StringIteratorPrototype% intrinsic object. String Iterator instances are initially created with the internal slots listed in Table 53.

Table 53: Internal Slots of String Iterator Instances

Internal Slot	Description
[[IteratedString]]	The String value whose code units are being iterated.
[[StringNextIndex]]	The integer index of the next string element (code unit) to be examined by this iterator.

21.2 RegExp (Regular Expression) Objects

A RegExp object contains a regular expression and the associated flags.

NOTE The form and functionality of regular expressions is modelled after the regular expression facility in the Perl 5 programming language.

21.2.1 Patterns

The **RegExp** constructor applies the following grammar to the input pattern String. An error occurs if the grammar cannot interpret the String as an expansion of *Pattern*.

Syntax

Pattern[U, N] ::
  Disjunction[?U, ?N]

Disjunction[U, N] ::
  Alternative[?U, ?N]
  Alternative[?U, ?N] | *Disjunction*[?U, ?N]

Alternative[U, N] ::
  [empty]
  Alternative[?U, ?N] *Term*[?U, ?N]

Term[U, N] ::
  Assertion[?U, ?N]
  Atom[?U, ?N]
  Atom[?U, ?N] *Quantifier*

Assertion[U, N] ::
  ^
  $
  \ b
  \ B
  (? = *Disjunction*[?U, ?N])
  (? ! *Disjunction*[?U, ?N])
  (? <= *Disjunction*[?U, ?N])
  (? <! *Disjunction*[?U, ?N])

Quantifier ::
  QuantifierPrefix
  QuantifierPrefix ?

QuantifierPrefix ::
  *
  +
  ?
  { *DecimalDigits* }
  { *DecimalDigits* , }
  { *DecimalDigits* , *DecimalDigits* }

Atom[U, N] ::
  PatternCharacter
  .
  \ *AtomEscape*[?U, ?N]

CharacterClass[?U]

(*GroupSpecifier*[?U] *Disjunction*[?U, ?N])

(? : *Disjunction*[?U, ?N])

SyntaxCharacter :: **one of**

^ $ \ . * + ? ( ) [ ] { } |

PatternCharacter ::

SourceCharacter but not *SyntaxCharacter*

AtomEscape[U, N] ::

DecimalEscape

CharacterClassEscape[?U]

CharacterEscape[?U]

[+N] k *GroupName*[?U]

CharacterEscape[U] ::

ControlEscape

c *ControlLetter*

0 [lookahead ∉ *DecimalDigit*]

HexEscapeSequence

RegExpUnicodeEscapeSequence[?U]

IdentityEscape[?U]

ControlEscape :: **one of**

f n r t v

ControlLetter :: **one of**

a b c d e f g h i j k l m n o p q r s t u v w x y z A B C D E F G H I J K L M N O P Q R S T U V W X Y Z

GroupSpecifier[U] ::

[empty]

? *GroupName*[?U]

GroupName[U] ::

< *RegExpIdentifierName*[?U] >

RegExpIdentifierName[U] ::

RegExpIdentifierStart[?U]

RegExpIdentifierName[?U] *RegExpIdentifierPart*[?U]

RegExpIdentifierStart[U] ::

UnicodeIDStart

$

_

\ *RegExpUnicodeEscapeSequence*[+U]

[~U] *UnicodeLeadSurrogate* *UnicodeTrailSurrogate*

RegExpIdentifierPart[U] ::

UnicodeIDContinue

$

**** *RegExpUnicodeEscapeSequence*$_{[+U]}$

[~U] *UnicodeLeadSurrogate* *UnicodeTrailSurrogate*

<ZWNJ>

<ZWJ>

RegExpUnicodeEscapeSequence$_{[U]}$ **::**

[+U] **u** *LeadSurrogate* **\u** *TrailSurrogate*

[+U] **u** *LeadSurrogate*

[+U] **u** *TrailSurrogate*

[+U] **u** *NonSurrogate*

[~U] **u** *Hex4Digits*

[+U] **u{** *CodePoint* **}**

UnicodeLeadSurrogate **::**

any Unicode code point in the inclusive range

UnicodeTrailSurrogate

any Unicode code point in the inclusive range

Each **\u** *TrailSurrogate* for which the choice of associated **u** *LeadSurrogate* is ambiguous shall be associated with the nearest possible **u** *LeadSurrogate* that would otherwise have no corresponding **\u** *TrailSurrogate*.

LeadSurrogate **::**

Hex4Digits but only if the SV of *Hex4Digits* is in the inclusive range 0xD800 to 0xDBFF

TrailSurrogate **::**

Hex4Digits but only if the SV of *Hex4Digits* is in the inclusive range 0xDC00 to 0xDFFF

NonSurrogate **::**

Hex4Digits but only if the SV of *Hex4Digits* is not in the inclusive range 0xD800 to 0xDFFF

IdentityEscape$_{[U]}$ **::**

[+U] *SyntaxCharacter*

[+U] **/**

[~U] *SourceCharacter* but not *UnicodeIDContinue*

DecimalEscape **::**

NonZeroDigit *DecimalDigits*$_{opt}$ [lookahead ∉ *DecimalDigit*]

CharacterClassEscape$_{[U]}$ **::**

d

D

s

S

w

W

[+U] **p{** *UnicodePropertyValueExpression* **}**

[+U] **P{** *UnicodePropertyValueExpression* **}**

UnicodePropertyValueExpression ::
UnicodePropertyName = *UnicodePropertyValue*
LoneUnicodePropertyNameOrValue

UnicodePropertyName ::
UnicodePropertyNameCharacters

UnicodePropertyNameCharacters ::
UnicodePropertyNameCharacter *UnicodePropertyNameCharacters*$_{opt}$

UnicodePropertyValue ::
UnicodePropertyValueCharacters

LoneUnicodePropertyNameOrValue ::
UnicodePropertyValueCharacters

UnicodePropertyValueCharacters ::
UnicodePropertyValueCharacter *UnicodePropertyValueCharacters*$_{opt}$

UnicodePropertyValueCharacter ::
UnicodePropertyNameCharacter
DecimalDigit

UnicodePropertyNameCharacter ::
ControlLetter
_

CharacterClass$_{[U]}$ ::
[[lookahead ≠ ^] *ClassRanges*$_{[?U]}$]
[^ *ClassRanges*$_{[?U]}$]

ClassRanges$_{[U]}$ ::
[empty]
NonemptyClassRanges$_{[?U]}$

NonemptyClassRanges$_{[U]}$ ::
ClassAtom$_{[?U]}$
ClassAtom$_{[?U]}$ *NonemptyClassRangesNoDash*$_{[?U]}$
ClassAtom$_{[?U]}$ - *ClassAtom*$_{[?U]}$ *ClassRanges*$_{[?U]}$

NonemptyClassRangesNoDash$_{[U]}$ ::
ClassAtom$_{[?U]}$
ClassAtomNoDash$_{[?U]}$ *NonemptyClassRangesNoDash*$_{[?U]}$
ClassAtomNoDash$_{[?U]}$ - *ClassAtom*$_{[?U]}$ *ClassRanges*$_{[?U]}$

ClassAtom$_{[U]}$ ::
-
ClassAtomNoDash$_{[?U]}$

ClassAtomNoDash$_{[U]}$ ::

SourceCharacter but not one of \ or] or -
\ *ClassEscape*[?U]

ClassEscape[U] ::
b
[+U] -
CharacterClassEscape[?U]
CharacterEscape[?U]

21.2.1.1 Static Semantics: Early Errors

Pattern :: *Disjunction*

- It is a Syntax Error if *NcapturingParens* ≥ 2^{32} - 1.
- It is a Syntax Error if *Pattern* contains multiple *GroupSpecifier*s whose enclosed *RegExpIdentifierName*s have the same StringValue.

QuantifierPrefix :: { *DecimalDigits* , *DecimalDigits* }

- It is a Syntax Error if the MV of the first *DecimalDigits* is larger than the MV of the second *DecimalDigits*.

AtomEscape :: k *GroupName*

- It is a Syntax Error if the enclosing *Pattern* does not contain a *GroupSpecifier* with an enclosed *RegExpIdentifierName* whose StringValue equals the StringValue of the *RegExpIdentifierName* of this production's *GroupName*.

AtomEscape :: *DecimalEscape*

- It is a Syntax Error if the CapturingGroupNumber of *DecimalEscape* is larger than *NcapturingParens* (21.2.2.1).

NonemptyClassRanges :: *ClassAtom* - *ClassAtom* *ClassRanges*

- It is a Syntax Error if IsCharacterClass of the first *ClassAtom* is **true** or IsCharacterClass of the second *ClassAtom* is **true**.
- It is a Syntax Error if IsCharacterClass of the first *ClassAtom* is **false** and IsCharacterClass of the second *ClassAtom* is **false** and the CharacterValue of the first *ClassAtom* is larger than the CharacterValue of the second *ClassAtom*.

NonemptyClassRangesNoDash :: *ClassAtomNoDash* - *ClassAtom* *ClassRanges*

- It is a Syntax Error if IsCharacterClass of *ClassAtomNoDash* is **true** or IsCharacterClass of *ClassAtom* is **true**.
- It is a Syntax Error if IsCharacterClass of *ClassAtomNoDash* is **false** and IsCharacterClass of *ClassAtom* is **false** and the CharacterValue of *ClassAtomNoDash* is larger than the CharacterValue of *ClassAtom*.

RegExpIdentifierStart[U] :: \ *RegExpUnicodeEscapeSequence*[?U]

- It is a Syntax Error if the CharacterValue of *RegExpUnicodeEscapeSequence* is not the code point value of "$", "_", or some code point matched by the *UnicodeIDStart* lexical grammar production.

RegExpIdentifierStart[U] :: *UnicodeLeadSurrogate* *UnicodeTrailSurrogate*

- It is a Syntax Error if the result of performing UTF16DecodeSurrogatePair on the two code points matched by

UnicodeLeadSurrogate and UnicodeTrailSurrogate respectively is not matched by the *UnicodeIDStart* lexical grammar production.

RegExpIdentifierPart[U] :: \ *RegExpUnicodeEscapeSequence*[?U]

- It is a Syntax Error if the CharacterValue of *RegExpUnicodeEscapeSequence* is not the code point value of "$", "_", <ZWNJ>, <ZWJ>, or some code point matched by the *UnicodeIDContinue* lexical grammar production.

RegExpIdentifierPart[U] :: *UnicodeLeadSurrogate* *UnicodeTrailSurrogate*

- It is a Syntax Error if the result of performing UTF16DecodeSurrogatePair on the two code points matched by UnicodeLeadSurrogate and UnicodeTrailSurrogate respectively is not matched by the *UnicodeIDContinue* lexical grammar production.

UnicodePropertyValueExpression :: *UnicodePropertyName* = *UnicodePropertyValue*

- It is a Syntax Error if the List of Unicode code points that is SourceText of *UnicodePropertyName* is not identical to a List of Unicode code points that is a Unicode property name or property alias listed in the "Property name and aliases" column of Table 55.
- It is a Syntax Error if the List of Unicode code points that is SourceText of *UnicodePropertyValue* is not identical to a List of Unicode code points that is a value or value alias for the Unicode property or property alias given by SourceText of *UnicodePropertyName* listed in the "Property value and aliases" column of the corresponding tables Table 57 or Table 58.

UnicodePropertyValueExpression :: *LoneUnicodePropertyNameOrValue*

- It is a Syntax Error if the List of Unicode code points that is SourceText of *LoneUnicodePropertyNameOrValue* is not identical to a List of Unicode code points that is a Unicode general category or general category alias listed in the "Property value and aliases" column of Table 57, nor a binary property or binary property alias listed in the "Property name and aliases" column of Table 56.

21.2.1.2 Static Semantics: CapturingGroupNumber

DecimalEscape :: *NonZeroDigit*

1. Return the Number value for the MV of *NonZeroDigit*.

DecimalEscape :: *NonZeroDigit* *DecimalDigits*

1. Let n be the mathematical integer number of code points in *DecimalDigits*.
2. Return the Number value for (the MV of *NonZeroDigit* $\times_{\mathbb{R}}$ $10_{\mathbb{R}}{}^{n}$ plus the MV of *DecimalDigits*).

The definitions of "the MV of *NonZeroDigit*" and "the MV of *DecimalDigits*" are in 11.8.3.

21.2.1.3 Static Semantics: IsCharacterClass

ClassAtom :: -
ClassAtomNoDash :: *SourceCharacter* but not one of \ or] or -
ClassEscape :: b
ClassEscape :: -
ClassEscape :: *CharacterEscape*

1. Return **false**.

ClassEscape :: *CharacterClassEscape*

1. Return **true**.

21.2.1.4 Static Semantics: CharacterValue

ClassAtom :: `-`

1. Return the code point value of U+002D (HYPHEN-MINUS).

ClassAtomNoDash :: *SourceCharacter* but not one of `\` or `]` or `-`

1. Let *ch* be the code point matched by *SourceCharacter*.
2. Return the code point value of *ch*.

ClassEscape :: `b`

1. Return the code point value of U+0008 (BACKSPACE).

ClassEscape :: `-`

1. Return the code point value of U+002D (HYPHEN-MINUS).

CharacterEscape :: *ControlEscape*

1. Return the code point value according to Table 54.

Table 54: ControlEscape Code Point Values

ControlEscape	Code Point Value	Code Point	Unicode Name	Symbol
t	9	**U+0009**	CHARACTER TABULATION	<HT>
n	10	**U+000A**	LINE FEED (LF)	<LF>
v	11	**U+000B**	LINE TABULATION	<VT>
f	12	**U+000C**	FORM FEED (FF)	<FF>
r	13	**U+000D**	CARRIAGE RETURN (CR)	<CR>

CharacterEscape :: `c` *ControlLetter*

1. Let *ch* be the code point matched by *ControlLetter*.
2. Let *i* be *ch*'s code point value.
3. Return the remainder of dividing *i* by 32.

CharacterEscape :: `0` [lookahead ∉ *DecimalDigit*]

1. Return the code point value of U+0000 (NULL).

NOTE **\0** represents the <NUL> character and cannot be followed by a decimal digit.

CharacterEscape :: *HexEscapeSequence*

1. Return the numeric value of the code unit that is the SV of *HexEscapeSequence*.

RegExpUnicodeEscapeSequence :: `u` *LeadSurrogate* `\u` *TrailSurrogate*

1. Let *lead* be the CharacterValue of *LeadSurrogate*.
2. Let *trail* be the CharacterValue of *TrailSurrogate*.
3. Let *cp* be UTF16DecodeSurrogatePair(*lead*, *trail*).
4. Return the code point value of *cp*.

RegExpUnicodeEscapeSequence :: `u` *LeadSurrogate*

1. Return the CharacterValue of *LeadSurrogate*.

RegExpUnicodeEscapeSequence :: `u` *TrailSurrogate*

1. Return the CharacterValue of *TrailSurrogate*.

RegExpUnicodeEscapeSequence :: `u` *NonSurrogate*

1. Return the CharacterValue of *NonSurrogate*.

RegExpUnicodeEscapeSequence :: `u` *Hex4Digits*

1. Return the Number value for the MV of *Hex4Digits*.

RegExpUnicodeEscapeSequence :: `u{` *CodePoint* `}`

1. Return the Number value for the MV of *CodePoint*.

LeadSurrogate :: *Hex4Digits*
TrailSurrogate :: *Hex4Digits*
NonSurrogate :: *Hex4Digits*

1. Return the Number value for the MV of *HexDigits*.

CharacterEscape :: *IdentityEscape*

1. Let *ch* be the code point matched by *IdentityEscape*.
2. Return the code point value of *ch*.

21.2.1.5 Static Semantics: SourceText

UnicodePropertyNameCharacters :: *UnicodePropertyNameCharacter* *UnicodePropertyNameCharacters*$_{opt}$
UnicodePropertyValueCharacters :: *UnicodePropertyValueCharacter* *UnicodePropertyValueCharacters*$_{opt}$

1. Return the List, in source text order, of Unicode code points in the source text matched by this production.

21.2.1.6 Static Semantics: StringValue

RegExpIdentifierName$_{[U]}$ ::
    RegExpIdentifierStart$_{[?U]}$
    RegExpIdentifierName$_{[?U]}$ *RegExpIdentifierPart*$_{[?U]}$

1. Let *idText* be the source text matched by *RegExpIdentifierName*.
2. Let *idTextUnescaped* be the result of replacing any occurrences of **** *RegExpUnicodeEscapeSequence* in *idText* with

the code point represented by the *RegExpUnicodeEscapeSequence*.

3. Return ! UTF16Encode(*idTextUnescaped*).

21.2.2 Pattern Semantics

A regular expression pattern is converted into an abstract closure using the process described below. An implementation is encouraged to use more efficient algorithms than the ones listed below, as long as the results are the same. The abstract closure is used as the value of a RegExp object's [[RegExpMatcher]] internal slot.

A *Pattern* is either a BMP pattern or a Unicode pattern depending upon whether or not its associated flags contain a **u**. A BMP pattern matches against a String interpreted as consisting of a sequence of 16-bit values that are Unicode code points in the range of the Basic Multilingual Plane. A Unicode pattern matches against a String interpreted as consisting of Unicode code points encoded using UTF-16. In the context of describing the behaviour of a BMP pattern "character" means a single 16-bit Unicode BMP code point. In the context of describing the behaviour of a Unicode pattern "character" means a UTF-16 encoded code point (6.1.4). In either context, "character value" means the numeric value of the corresponding non-encoded code point.

The syntax and semantics of *Pattern* is defined as if the source code for the *Pattern* was a List of *SourceCharacter* values where each *SourceCharacter* corresponds to a Unicode code point. If a BMP pattern contains a non-BMP *SourceCharacter* the entire pattern is encoded using UTF-16 and the individual code units of that encoding are used as the elements of the List.

NOTE For example, consider a pattern expressed in source text as the single non-BMP character U+1D11E (MUSICAL SYMBOL G CLEF). Interpreted as a Unicode pattern, it would be a single element (character) List consisting of the single code point 0x1D11E. However, interpreted as a BMP pattern, it is first UTF-16 encoded to produce a two element List consisting of the code units 0xD834 and 0xDD1E.

Patterns are passed to the RegExp constructor as ECMAScript String values in which non-BMP characters are UTF-16 encoded. For example, the single character MUSICAL SYMBOL G CLEF pattern, expressed as a String value, is a String of length 2 whose elements were the code units 0xD834 and 0xDD1E. So no further translation of the string would be necessary to process it as a BMP pattern consisting of two pattern characters. However, to process it as a Unicode pattern UTF16DecodeSurrogatePair must be used in producing a List consisting of a single pattern character, the code point U+1D11E.

An implementation may not actually perform such translations to or from UTF-16, but the semantics of this specification requires that the result of pattern matching be as if such translations were performed.

21.2.2.1 Notation

The descriptions below use the following variables:

- *Input* is a List consisting of all of the characters, in order, of the String being matched by the regular expression pattern. Each character is either a code unit or a code point, depending upon the kind of pattern involved. The notation *Input*[*n*] means the nth character of *Input*, where *n* can range between 0 (inclusive) and *InputLength* (exclusive).

- *InputLength* is the number of characters in *Input*.
- *NcapturingParens* is the total number of left-capturing parentheses (i.e. the total number of *Atom* :: (*GroupSpecifier* *Disjunction*) Parse Nodes) in the pattern. A left-capturing parenthesis is any (pattern character that is matched by the (terminal of the *Atom* :: (*GroupSpecifier* *Disjunction*) production.
- *DotAll* is **true** if the RegExp object's [[OriginalFlags]] internal slot contains **"s"** and otherwise is **false**.
- *IgnoreCase* is **true** if the RegExp object's [[OriginalFlags]] internal slot contains **"i"** and otherwise is **false**.
- *Multiline* is **true** if the RegExp object's [[OriginalFlags]] internal slot contains **"m"** and otherwise is **false**.
- *Unicode* is **true** if the RegExp object's [[OriginalFlags]] internal slot contains **"u"** and otherwise is **false**.

Furthermore, the descriptions below use the following internal data structures:

- A *CharSet* is a mathematical set of characters, either code units or code points depending up the state of the *Unicode* flag. "All characters" means either all code unit values or all code point values also depending upon the state of *Unicode*.
- A *State* is an ordered pair (*endIndex*, *captures*) where *endIndex* is an integer and *captures* is a List of *NcapturingParens* values. States are used to represent partial match states in the regular expression matching algorithms. The *endIndex* is one plus the index of the last input character matched so far by the pattern, while *captures* holds the results of capturing parentheses. The nth element of *captures* is either a List that represents the value obtained by the nth set of capturing parentheses or **undefined** if the nth set of capturing parentheses hasn't been reached yet. Due to backtracking, many States may be in use at any time during the matching process.
- A *MatchResult* is either a State or the special token failure that indicates that the match failed.
- A *Continuation* is an abstract closure that takes one State argument and returns a MatchResult result. The Continuation attempts to match the remaining portion (specified by the closure's captured values) of the pattern against *Input*, starting at the intermediate state given by its State argument. If the match succeeds, the Continuation returns the final State that it reached; if the match fails, the Continuation returns failure.
- A *Matcher* is an abstract closure that takes two arguments—a State and a Continuation—and returns a MatchResult result. A Matcher attempts to match a middle subpattern (specified by the closure's captured values) of the pattern against *Input*, starting at the intermediate state given by its State argument. The Continuation argument should be a closure that matches the rest of the pattern. After matching the subpattern of a pattern to obtain a new State, the Matcher then calls Continuation on that new State to test if the rest of the pattern can match as well. If it can, the Matcher returns the State returned by Continuation; if not, the Matcher may try different choices at its choice points, repeatedly calling Continuation until it either succeeds or all possibilities have been exhausted.

21.2.2.2 Pattern

The production *Pattern* :: *Disjunction* evaluates as follows:

1. Evaluate *Disjunction* with +1 as its *direction* argument to obtain a Matcher *m*.
2. Return a new abstract closure with parameters (*str*, *index*) that captures *m* and performs the following steps when called:
    a. Assert: Type(*str*) is String.
    b. Assert: ! IsNonNegativeInteger(*index*) is **true** and *index* ≤ the length of *str*.
    c. If *Unicode* is **true**, let *Input* be a List consisting of the sequence of code points of ! UTF16DecodeString(*str*). Otherwise, let *Input* be a List consisting of the sequence of code units that are the elements of *str*. *Input* will be used throughout the algorithms in 21.2.2. Each element of *Input* is considered to be a character.

d. Let *InputLength* be the number of characters contained in *Input*. This variable will be used throughout the algorithms in 21.2.2.
e. Let *listIndex* be the index into *Input* of the character that was obtained from element *index* of *str*.
f. Let *c* be a new Continuation with parameters (*y*) that captures nothing and performs the following steps when called:
    i. Assert: *y* is a State.
    ii. Return *y*.
g. Let *cap* be a List of *NcapturingParens* **undefined** values, indexed 1 through *NcapturingParens*.
h. Let *x* be the State (*listIndex*, *cap*).
i. Call *m*(*x*, *c*) and return its result.

NOTE A Pattern evaluates ("compiles") to an abstract closure value. RegExpBuiltinExec can then apply this procedure to a String and an offset within the String to determine whether the pattern would match starting at exactly that offset within the String, and, if it does match, what the values of the capturing parentheses would be. The algorithms in 21.2.2 are designed so that compiling a pattern may throw a **SyntaxError** exception; on the other hand, once the pattern is successfully compiled, applying the resulting abstract closure to find a match in a String cannot throw an exception (except for any host-defined exceptions that can occur anywhere such as out-of-memory).

21.2.2.3 Disjunction

With parameter *direction*.

The production *Disjunction* :: *Alternative* evaluates as follows:

1. Evaluate *Alternative* with argument *direction* to obtain a Matcher *m*.
2. Return *m*.

The production *Disjunction* :: *Alternative* | *Disjunction* evaluates as follows:

1. Evaluate *Alternative* with argument *direction* to obtain a Matcher *m1*.
2. Evaluate *Disjunction* with argument *direction* to obtain a Matcher *m2*.
3. Return a new Matcher with parameters (*x*, *c*) that captures *m1* and *m2* and performs the following steps when called:
    a. Assert: *x* is a State.
    b. Assert: *c* is a Continuation.
    c. Call *m1*(*x*, *c*) and let *r* be its result.
    d. If *r* is not failure, return *r*.
    e. Call *m2*(*x*, *c*) and return its result.

NOTE The **|** regular expression operator separates two alternatives. The pattern first tries to match the left *Alternative* (followed by the sequel of the regular expression); if it fails, it tries to match the right *Disjunction* (followed by the sequel of the regular expression). If the left *Alternative*, the right *Disjunction*, and the sequel all have choice points, all choices in the sequel are tried before moving on to the next choice in the left *Alternative*. If choices in the left *Alternative* are exhausted, the right *Disjunction* is tried instead of the left *Alternative*. Any capturing parentheses inside a portion of the pattern skipped by **|** produce **undefined** values instead of Strings. Thus, for example,

```
/a|ab/.exec("abc")
```

returns the result **"a"** and not **"ab"**. Moreover,

```
/((a)|(ab))((c)|(bc))/.exec("abc")
```

returns the array

```
["abc", "a", "a", undefined, "bc", undefined, "bc"]
```

and not

```
["abc", "ab", undefined, "ab", "c", "c", undefined]
```

The order in which the two alternatives are tried is independent of the value of *direction*.

21.2.2.4 Alternative

With parameter *direction*.

The production *Alternative* **::** [empty] evaluates as follows:

1. Return a new Matcher with parameters (x, c) that captures nothing and performs the following steps when called:
    a. Assert: x is a State.
    b. Assert: c is a Continuation.
    c. Call $c(x)$ and return its result.

The production *Alternative* **::** *Alternative Term* evaluates as follows:

1. Evaluate *Alternative* with argument *direction* to obtain a Matcher *m1*.
2. Evaluate *Term* with argument *direction* to obtain a Matcher *m2*.
3. If *direction* is equal to +1, then
    a. Return a new Matcher with parameters (x, c) that captures *m1* and *m2* and performs the following steps when called:
        i. Assert: x is a State.
        ii. Assert: c is a Continuation.
        iii. Let d be a new Continuation with parameters (y) that captures c and *m2* and performs the following steps when called:
            1. Assert: y is a State.
            2. Call $m2(y, c)$ and return its result.
        iv. Call $m1(x, d)$ and return its result.
4. Else,

a. Assert: *direction* is equal to -1.
b. Return a new Matcher with parameters (*x*, *c*) that captures *m1* and *m2* and performs the following steps when called:
    i. Assert: *x* is a State.
    ii. Assert: *c* is a Continuation.
    iii. Let *d* be a new Continuation with parameters (*y*) that captures *c* and *m1* and performs the following steps when called:
        1. Assert: *y* is a State.
        2. Call *m1*(*y*, *c*) and return its result.
    iv. Call *m2*(*x*, *d*) and return its result.

NOTE Consecutive *Term*s try to simultaneously match consecutive portions of *Input*. When *direction* is equal to +1, if the left *Alternative*, the right *Term*, and the sequel of the regular expression all have choice points, all choices in the sequel are tried before moving on to the next choice in the right *Term*, and all choices in the right *Term* are tried before moving on to the next choice in the left *Alternative*. When *direction* is equal to -1, the evaluation order of *Alternative* and *Term* are reversed.

21.2.2.5 Term

With parameter *direction*.

The production *Term* **::** *Assertion* evaluates as follows:

1. Return the Matcher that is the result of evaluating *Assertion*.

NOTE The resulting Matcher is independent of *direction*.

The production *Term* **::** *Atom* evaluates as follows:

1. Return the Matcher that is the result of evaluating *Atom* with argument *direction*.

The production *Term* **::** *Atom Quantifier* evaluates as follows:

1. Evaluate *Atom* with argument *direction* to obtain a Matcher *m*.
2. Evaluate *Quantifier* to obtain the three results: an integer *min*, an integer (or ∞) *max*, and Boolean *greedy*.
3. Assert: If *max* is finite, then *max* is not less than *min*.
4. Let *parenIndex* be the number of left-capturing parentheses in the entire regular expression that occur to the left of this *Term*. This is the total number of *Atom* **::** **(** *GroupSpecifier Disjunction* **)** Parse Nodes prior to or enclosing this *Term*.
5. Let *parenCount* be the number of left-capturing parentheses in *Atom*. This is the total number of *Atom* **::** **(** *GroupSpecifier Disjunction* **)** Parse Nodes enclosed by *Atom*.
6. Return a new Matcher with parameters (*x*, *c*) that captures *m*, *min*, *max*, *greedy*, *parenIndex*, and *parenCount* and performs the following steps when called:
    a. Assert: *x* is a State.
    b. Assert: *c* is a Continuation.
    c. Call RepeatMatcher(*m*, *min*, *max*, *greedy*, *x*, *c*, *parenIndex*, *parenCount*) and return its result.

21.2.2.5.1 Runtime Semantics: RepeatMatcher (*m*, *min*, *max*, *greedy*, *x*, *c*, *parenIndex*, *parenCount*)

The abstract operation RepeatMatcher takes eight parameters, a Matcher *m*, an integer *min*, an integer (or ∞) *max*, a Boolean *greedy*, a State *x*, a Continuation *c*, an integer *parenIndex*, and an integer *parenCount*, and performs the following steps:

1. If *max* is zero, return *c*(*x*).
2. Let *d* be a new Continuation with parameters (*y*) that captures *m*, *min*, *max*, *greedy*, *x*, *c*, *parenIndex*, and *parenCount* and performs the following steps when called:
    a. Assert: *y* is a State.
    b. If *min* is zero and *y*'s *endIndex* is equal to *x*'s *endIndex*, return failure.
    c. If *min* is zero, let *min2* be zero; otherwise let *min2* be *min* - 1.
    d. If *max* is ∞, let *max2* be ∞; otherwise let *max2* be *max* - 1.
    e. Call RepeatMatcher(*m*, *min2*, *max2*, *greedy*, *y*, *c*, *parenIndex*, *parenCount*) and return its result.
3. Let *cap* be a copy of *x*'s *captures* List.
4. For each integer *k* that satisfies *parenIndex* < *k* and *k* ≤ *parenIndex* + *parenCount*, set *cap*[*k*] to **undefined**.
5. Let *e* be *x*'s *endIndex*.
6. Let *xr* be the State (*e*, *cap*).
7. If *min* is not zero, return *m*(*xr*, *d*).
8. If *greedy* is **false**, then
    a. Call *c*(*x*) and let *z* be its result.
    b. If *z* is not failure, return *z*.
    c. Call *m*(*xr*, *d*) and return its result.
9. Call *m*(*xr*, *d*) and let *z* be its result.
10. If *z* is not failure, return *z*.
11. Call *c*(*x*) and return its result.

NOTE 1 An *Atom* followed by a *Quantifier* is repeated the number of times specified by the *Quantifier*. A *Quantifier* can be non-greedy, in which case the *Atom* pattern is repeated as few times as possible while still matching the sequel, or it can be greedy, in which case the *Atom* pattern is repeated as many times as possible while still matching the sequel. The *Atom* pattern is repeated rather than the input character sequence that it matches, so different repetitions of the *Atom* can match different input substrings.

NOTE 2 If the *Atom* and the sequel of the regular expression all have choice points, the *Atom* is first matched as many (or as few, if non-greedy) times as possible. All choices in the sequel are tried before moving on to the next choice in the last repetition of *Atom*. All choices in the last (n^{th}) repetition of *Atom* are tried before moving on to the next choice in the next-to-last $(n - 1)^{st}$ repetition of *Atom*; at which point it may turn out that more or fewer repetitions of *Atom* are now possible; these are exhausted (again, starting with either as few or as many as possible) before moving on to the next choice in the $(n - 1)^{st}$ repetition of *Atom* and so on.

Compare

```
/a[a-z]{2,4}/.exec("abcdefghi")
```

which returns **"abcde"** with

```
/a[a-z]{2,4}?/.exec("abcdefghi")
```

which returns **"abc"**.

Consider also

```
/(aa|aabaac|ba|b|c)*/.exec("aabaac")
```

which, by the choice point ordering above, returns the array

```
["aaba", "ba"]
```

and not any of:

```
["aabaac", "aabaac"]
["aabaac", "c"]
```

The above ordering of choice points can be used to write a regular expression that calculates the greatest common divisor of two numbers (represented in unary notation). The following example calculates the gcd of 10 and 15:

```
"aaaaaaaaaa,aaaaaaaaaaaaaaa".replace(/^(a+)\1*,\1+$/, "$1")
```

which returns the gcd in unary notation **"aaaaa"**.

NOTE 3 Step 4 of the RepeatMatcher clears *Atom*'s captures each time *Atom* is repeated. We can see its behaviour in the regular expression

```
/(z)((a+)?(b+)?(c))*/.exec("zaacbbbcac")
```

which returns the array

```
["zaacbbbcac", "z", "ac", "a", undefined, "c"]
```

and not

```
["zaacbbbcac", "z", "ac", "a", "bbb", "c"]
```

because each iteration of the outermost ***** clears all captured Strings contained in the quantified *Atom*, which in this case includes capture Strings numbered 2, 3, 4, and 5.

NOTE 4 Step 2.a of the RepeatMatcher states that once the minimum number of repetitions has been satisfied, any more expansions of *Atom* that match the empty character sequence are not considered for further repetitions. This prevents the regular expression engine from falling into an infinite loop on patterns such as:

```
/(a*)*/.exec("b")
```

or the slightly more complicated:

```
/(a*)b\1+/.exec("baaaac")
```

which returns the array

```
["b", ""]
```

21.2.2.6 Assertion

The production *Assertion* **::** `^` evaluates as follows:

1. Return a new Matcher with parameters (*x*, *c*) that captures nothing and performs the following steps when called:
    a. Assert: *x* is a State.
    b. Assert: *c* is a Continuation.
    c. Let *e* be *x*'s *endIndex*.
    d. If *e* is zero, or if *Multiline* is **true** and the character *Input*[*e* - 1] is one of *LineTerminator*, then
        i. Call *c*(*x*) and return its result.
    e. Return failure.

NOTE Even when the **y** flag is used with a pattern, **^** always matches only at the beginning of *Input*, or (if *Multiline* is **true**) at the beginning of a line.

The production *Assertion* **::** `$` evaluates as follows:

1. Return a new Matcher with parameters (x, c) that captures nothing and performs the following steps when called:
    a. Assert: x is a State.
    b. Assert: c is a Continuation.
    c. Let e be x's *endIndex*.
    d. If e is equal to *InputLength*, or if *Multiline* is **true** and the character *Input*[e] is one of *LineTerminator*, then
        i. Call c(x) and return its result.
    e. Return failure.

The production *Assertion* :: `\b` evaluates as follows:

1. Return a new Matcher with parameters (x, c) that captures nothing and performs the following steps when called:
    a. Assert: x is a State.
    b. Assert: c is a Continuation.
    c. Let e be x's *endIndex*.
    d. Call IsWordChar(e - 1) and let a be the Boolean result.
    e. Call IsWordChar(e) and let b be the Boolean result.
    f. If a is **true** and b is **false**, or if a is **false** and b is **true**, then
        i. Call c(x) and return its result.
    g. Return failure.

The production *Assertion* :: `\B` evaluates as follows:

1. Return a new Matcher with parameters (x, c) that captures nothing and performs the following steps when called:
    a. Assert: x is a State.
    b. Assert: c is a Continuation.
    c. Let e be x's *endIndex*.
    d. Call IsWordChar(e - 1) and let a be the Boolean result.
    e. Call IsWordChar(e) and let b be the Boolean result.
    f. If a is **true** and b is **true**, or if a is **false** and b is **false**, then
        i. Call c(x) and return its result.
    g. Return failure.

The production *Assertion* :: `(?=` *Disjunction* `)` evaluates as follows:

1. Evaluate *Disjunction* with +1 as its *direction* argument to obtain a Matcher m.
2. Return a new Matcher with parameters (x, c) that captures m and performs the following steps when called:
    a. Assert: x is a State.
    b. Assert: c is a Continuation.
    c. Let d be a new Continuation with parameters (y) that captures nothing and performs the following steps when called:
        i. Assert: y is a State.
        ii. Return y.
    d. Call m(x, d) and let r be its result.
    e. If r is failure, return failure.
    f. Let y be r's State.
    g. Let *cap* be y's *captures* List.
    h. Let *xe* be x's *endIndex*.

i. Let z be the State (xe, cap).
j. Call $c(z)$ and return its result.

The production *Assertion* :: `(?!` *Disjunction* `)` evaluates as follows:

1. Evaluate *Disjunction* with +1 as its *direction* argument to obtain a Matcher m.
2. Return a new Matcher with parameters (x, c) that captures m and performs the following steps when called:
   a. Assert: x is a State.
   b. Assert: c is a Continuation.
   c. Let d be a new Continuation with parameters (y) that captures nothing and performs the following steps when called:
      i. Assert: y is a State.
      ii. Return y.
   d. Call $m(x, d)$ and let r be its result.
   e. If r is not failure, return failure.
   f. Call $c(x)$ and return its result.

The production *Assertion* :: `(?<=` *Disjunction* `)` evaluates as follows:

1. Evaluate *Disjunction* with -1 as its *direction* argument to obtain a Matcher m.
2. Return a new Matcher with parameters (x, c) that captures m and performs the following steps when called:
   a. Assert: x is a State.
   b. Assert: c is a Continuation.
   c. Let d be a new Continuation with parameters (y) that captures nothing and performs the following steps when called:
      i. Assert: y is a State.
      ii. Return y.
   d. Call $m(x, d)$ and let r be its result.
   e. If r is failure, return failure.
   f. Let y be r's State.
   g. Let cap be y's *captures* List.
   h. Let xe be x's *endIndex*.
   i. Let z be the State (xe, cap).
   j. Call $c(z)$ and return its result.

The production *Assertion* :: `(?<!` *Disjunction* `)` evaluates as follows:

1. Evaluate *Disjunction* with -1 as its *direction* argument to obtain a Matcher m.
2. Return a new Matcher with parameters (x, c) that captures m and performs the following steps when called:
   a. Assert: x is a State.
   b. Assert: c is a Continuation.
   c. Let d be a new Continuation with parameters (y) that captures nothing and performs the following steps when called:
      i. Assert: y is a State.
      ii. Return y.
   d. Call $m(x, d)$ and let r be its result.
   e. If r is not failure, return failure.
   f. Call $c(x)$ and return its result.

21.2.2.6.1 Runtime Semantics: WordCharacters ( )

The abstract operation WordCharacters performs the following steps:

1. Let *A* be a set of characters containing the sixty-three characters:

```
a b c d e f g h i j k l m n o p q r s t u v w x y z
A B C D E F G H I J K L M N O P Q R S T U V W X Y Z
0 1 2 3 4 5 6 7 8 9 _
```

2. Let *U* be an empty set.
3. For each character *c* not in set *A* where Canonicalize(*c*) is in *A*, add *c* to *U*.
4. Assert: Unless *Unicode* and *IgnoreCase* are both **true**, *U* is empty.
5. Add the characters in set *U* to set *A*.
6. Return *A*.

21.2.2.6.2 Runtime Semantics: IsWordChar (*e*)

The abstract operation IsWordChar takes an integer parameter *e* and performs the following steps:

1. If *e* is -1 or *e* is *InputLength*, return **false**.
2. Let *c* be the character *Input*[*e*].
3. Let *wordChars* be the result of ! WordCharacters().
4. If *c* is in *wordChars*, return **true**.
5. Return **false**.

21.2.2.7 Quantifier

The production *Quantifier* :: *QuantifierPrefix* evaluates as follows:

1. Evaluate *QuantifierPrefix* to obtain the two results: an integer *min* and an integer (or ∞) *max*.
2. Return the three results *min*, *max*, and **true**.

The production *Quantifier* :: *QuantifierPrefix* `?` evaluates as follows:

1. Evaluate *QuantifierPrefix* to obtain the two results: an integer *min* and an integer (or ∞) *max*.
2. Return the three results *min*, *max*, and **false**.

The production *QuantifierPrefix* :: `*` evaluates as follows:

1. Return the two results 0 and ∞.

The production *QuantifierPrefix* :: `+` evaluates as follows:

1. Return the two results 1 and ∞.

The production *QuantifierPrefix* :: `?` evaluates as follows:

1. Return the two results 0 and 1.

The production *QuantifierPrefix* :: `{` *DecimalDigits* `}` evaluates as follows:

1. Let *i* be the MV of *DecimalDigits* (see 11.8.3).
2. Return the two results *i* and *i*.

The production *QuantifierPrefix* :: { *DecimalDigits* , } evaluates as follows:

1. Let *i* be the MV of *DecimalDigits*.
2. Return the two results *i* and ∞.

The production *QuantifierPrefix* :: { *DecimalDigits* , *DecimalDigits* } evaluates as follows:

1. Let *i* be the MV of the first *DecimalDigits*.
2. Let *j* be the MV of the second *DecimalDigits*.
3. Return the two results *i* and *j*.

21.2.2.8 Atom

With parameter *direction*.

The production *Atom* :: *PatternCharacter* evaluates as follows:

1. Let *ch* be the character matched by *PatternCharacter*.
2. Let *A* be a one-element CharSet containing the character *ch*.
3. Call CharacterSetMatcher(*A*, **false**, *direction*) and return its Matcher result.

The production *Atom* :: . evaluates as follows:

1. If *DotAll* is **true**, then
    a. Let *A* be the set of all characters.
2. Otherwise, let *A* be the set of all characters except *LineTerminator*.
3. Call CharacterSetMatcher(*A*, **false**, *direction*) and return its Matcher result.

The production *Atom* :: \ *AtomEscape* evaluates as follows:

1. Return the Matcher that is the result of evaluating *AtomEscape* with argument *direction*.

The production *Atom* :: *CharacterClass* evaluates as follows:

1. Evaluate *CharacterClass* to obtain a CharSet *A* and a Boolean *invert*.
2. Call CharacterSetMatcher(*A*, *invert*, *direction*) and return its Matcher result.

The production *Atom* :: (*GroupSpecifier* *Disjunction*) evaluates as follows:

1. Evaluate *Disjunction* with argument *direction* to obtain a Matcher *m*.
2. Let *parenIndex* be the number of left-capturing parentheses in the entire regular expression that occur to the left of this *Atom*. This is the total number of *Atom* :: (*GroupSpecifier* *Disjunction*) Parse Nodes prior to or enclosing this *Atom*.
3. Return a new Matcher with parameters (*x*, *c*) that captures *direction*, *m*, and *parenIndex* and performs the following steps when called:
    a. Assert: *x* is a State.
    b. Assert: *c* is a Continuation.
    c. Let *d* be a new Continuation with parameters (*y*) that captures *x*, *c*, *direction*, and *parenIndex* and performs the following steps when called:
        i. Assert: *y* is a State.
        ii. Let *cap* be a copy of *y*'s *captures* List.
        iii. Let *xe* be *x*'s *endIndex*.

iv. Let *ye* be *y*'s *endIndex*.
v. If *direction* is equal to +1, then
    1. Assert: *xe* ≤ *ye*.
    2. Let *s* be a new List whose elements are the characters of *Input* at indices *xe* (inclusive) through *ye* (exclusive).
vi. Else,
    1. Assert: *direction* is equal to -1.
    2. Assert: *ye* ≤ *xe*.
    3. Let *s* be a new List whose elements are the characters of *Input* at indices *ye* (inclusive) through *xe* (exclusive).
vii. Set *cap*[*parenIndex* + 1] to *s*.
viii. Let *z* be the State (*ye*, *cap*).
ix. Call *c*(*z*) and return its result.

d. Call *m*(*x*, *d*) and return its result.

The production *Atom* :: `(` `?` `:` *Disjunction* `)` evaluates as follows:

1. Return the Matcher that is the result of evaluating *Disjunction* with argument *direction*.

21.2.2.8.1 Runtime Semantics: CharacterSetMatcher (*A*, *invert*, *direction*)

The abstract operation CharacterSetMatcher takes three arguments, a CharSet *A*, a Boolean flag *invert*, and an integer *direction*, and performs the following steps:

1. Return a new Matcher with parameters (*x*, *c*) that captures *A*, *invert*, and *direction* and performs the following steps when called:
    a. Assert: *x* is a State.
    b. Assert: *c* is a Continuation.
    c. Let *e* be *x*'s *endIndex*.
    d. Let *f* be *e* + *direction*.
    e. If *f* < 0 or *f* > *InputLength*, return failure.
    f. Let *index* be min(*e*, *f*).
    g. Let *ch* be the character *Input*[*index*].
    h. Let *cc* be Canonicalize(*ch*).
    i. If *invert* is **false**, then
        i. If there does not exist a member *a* of set *A* such that Canonicalize(*a*) is *cc*, return failure.
    j. Else,
        i. Assert: *invert* is **true**.
        ii. If there exists a member *a* of set *A* such that Canonicalize(*a*) is *cc*, return failure.
    k. Let *cap* be *x*'s *captures* List.
    l. Let *y* be the State (*f*, *cap*).
    m. Call *c*(*y*) and return its result.

21.2.2.8.2 Runtime Semantics: Canonicalize (*ch*)

The abstract operation Canonicalize takes a character parameter *ch* and performs the following steps:

1. If *IgnoreCase* is **false**, return *ch*.
2. If *Unicode* is **true**, then
    a. If the file CaseFolding.txt of the Unicode Character Database provides a simple or common case folding

mapping for *ch*, return the result of applying that mapping to *ch*.

b. Return *ch*.

3. Else,

a. Assert: *ch* is a UTF-16 code unit.

b. Let *s* be the String value consisting of the single code unit *ch*.

c. Let *u* be the same result produced as if by performing the algorithm for **`String.prototype.toUpperCase`** using *s* as the **this** value.

d. Assert: Type(*u*) is String.

e. If *u* does not consist of a single code unit, return *ch*.

f. Let *cu* be *u*'s single code unit element.

g. If the numeric value of *ch* ≥ 128 and the numeric value of *cu* < 128, return *ch*.

h. Return *cu*.

NOTE 1 Parentheses of the form **(** *Disjunction* **)** serve both to group the components of the *Disjunction* pattern together and to save the result of the match. The result can be used either in a backreference (**** followed by a nonzero decimal number), referenced in a replace String, or returned as part of an array from the regular expression matching abstract closure. To inhibit the capturing behaviour of parentheses, use the form **`(?:`** *Disjunction* **)** instead.

NOTE 2 The form **`(?=`** *Disjunction* **)** specifies a zero-width positive lookahead. In order for it to succeed, the pattern inside *Disjunction* must match at the current position, but the current position is not advanced before matching the sequel. If *Disjunction* can match at the current position in several ways, only the first one is tried. Unlike other regular expression operators, there is no backtracking into a **`(?=`** form (this unusual behaviour is inherited from Perl). This only matters when the *Disjunction* contains capturing parentheses and the sequel of the pattern contains backreferences to those captures.

For example,

```
/(?=(a+))/.exec("baaabac")
```

matches the empty String immediately after the first **b** and therefore returns the array:

```
["", "aaa"]
```

To illustrate the lack of backtracking into the lookahead, consider:

```
/(?=(a+))a*b\1/.exec("baaabac")
```

This expression returns

```
["aba", "a"]
```

and not:

```
["aaaba", "a"]
```

NOTE 3 The form **`(?!`** *Disjunction* **`)`** specifies a zero-width negative lookahead. In order for it to succeed, the pattern inside *Disjunction* must fail to match at the current position. The current position is not advanced before matching the sequel. *Disjunction* can contain capturing parentheses, but backreferences to them only make sense from within *Disjunction* itself. Backreferences to these capturing parentheses from elsewhere in the pattern always return **undefined** because the negative lookahead must fail for the pattern to succeed. For example,

```
/(.*?)a(?!(a+)b\2c)\2(.*)/.exec("baaabaac")
```

looks for an **`a`** not immediately followed by some positive number n of **`a`**'s, a **`b`**, another n **`a`**'s (specified by the first **`\2`**) and a **`c`**. The second **`\2`** is outside the negative lookahead, so it matches against **undefined** and therefore always succeeds. The whole expression returns the array:

```
["baaabaac", "ba", undefined, "abaac"]
```

NOTE 4 In case-insignificant matches when *Unicode* is **true**, all characters are implicitly case-folded using the simple mapping provided by the Unicode standard immediately before they are compared. The simple mapping always maps to a single code point, so it does not map, for example, **`ß`** (U+00DF) to **`SS`**. It may however map a code point outside the Basic Latin range to a character within, for example, **`ſ`** (U+017F) to **`s`**. Such characters are not mapped if *Unicode* is **false**. This prevents Unicode code points such as U+017F and U+212A from matching regular expressions such as **`/[a-z]/i`**, but they will match **`/[a-z]/ui`**.

21.2.2.8.3 Runtime Semantics: UnicodeMatchProperty (*p*)

The abstract operation UnicodeMatchProperty takes a parameter *p* that is a List of Unicode code points and performs the following steps:

1. Assert: *p* is a List of Unicode code points that is identical to a List of Unicode code points that is a Unicode property name or property alias listed in the "Property name and aliases" column of Table 55 or Table 56.
2. Let *c* be the canonical property name of *p* as given in the "Canonical property name" column of the corresponding row.
3. Return the List of Unicode code points of *c*.

Implementations must support the Unicode property names and aliases listed in Table 55 and Table 56. To ensure interoperability, implementations must not support any other property names or aliases.

NOTE 1 For example, **`Script_Extensions`** (property name) and **`scx`** (property alias) are valid, but **`script_extensions`** or **`Scx`** aren't.

NOTE 2 The listed properties form a superset of what UTS18 RL1.2 requires.

Table 55: Non-binary Unicode property aliases and their canonical property names

Property name and aliases	Canonical property name
General_Category gc	General_Category
Script sc	Script
Script_Extensions scx	Script_Extensions

Table 56: Binary Unicode property aliases and their canonical property names

Property name and aliases	Canonical property name
ASCII	ASCII
ASCII_Hex_Digit AHex	ASCII_Hex_Digit
Alphabetic Alpha	Alphabetic
Any	Any
Assigned	Assigned
Bidi_Control Bidi_C	Bidi_Control
Bidi_Mirrored Bidi_M	Bidi_Mirrored
Case_Ignorable CI	Case_Ignorable
Cased	Cased
Changes_When_Casefolded CWCF	Changes_When_Casefolded
Changes_When_Casemapped CWCM	Changes_When_Casemapped
Changes_When_Lowercased CWL	Changes_When_Lowercased

Changes_When_NFKC_Casefolded CWKCF	Changes_When_NFKC_Casefolded
Changes_When_Titlecased CWT	Changes_When_Titlecased
Changes_When_Uppercased CWU	Changes_When_Uppercased
Dash	Dash
Default_Ignorable_Code_Point DI	Default_Ignorable_Code_Point
Deprecated Dep	Deprecated
Diacritic Dia	Diacritic
Emoji	Emoji
Emoji_Component	Emoji_Component
Emoji_Modifier	Emoji_Modifier
Emoji_Modifier_Base	Emoji_Modifier_Base
Emoji_Presentation	Emoji_Presentation
Extended_Pictographic	Extended_Pictographic
Extender Ext	Extender
Grapheme_Base Gr_Base	Grapheme_Base
Grapheme_Extend Gr_Ext	Grapheme_Extend
Hex_Digit Hex	Hex_Digit
IDS_Binary_Operator IDSB	IDS_Binary_Operator
IDS_Trinary_Operator IDST	IDS_Trinary_Operator

ID_Continue IDC	ID_Continue
ID_Start IDS	ID_Start
Ideographic Ideo	Ideographic
Join_Control Join_C	Join_Control
Logical_Order_Exception LOE	Logical_Order_Exception
Lowercase Lower	Lowercase
Math	Math
Noncharacter_Code_Point NChar	Noncharacter_Code_Point
Pattern_Syntax Pat_Syn	Pattern_Syntax
Pattern_White_Space Pat_WS	Pattern_White_Space
Quotation_Mark QMark	Quotation_Mark
Radical	Radical
Regional_Indicator RI	Regional_Indicator
Sentence_Terminal STerm	Sentence_Terminal
Soft_Dotted SD	Soft_Dotted
Terminal_Punctuation Term	Terminal_Punctuation

`Unified_Ideograph` `UIdeo`	`Unified_Ideograph`
`Uppercase` `Upper`	`Uppercase`
`Variation_Selector` `VS`	`Variation_Selector`
`White_Space` `space`	`White_Space`
`XID_Continue` `XIDC`	`XID_Continue`
`XID_Start` `XIDS`	`XID_Start`

21.2.2.8.4 Runtime Semantics: UnicodeMatchPropertyValue (*p*, *v*)

The abstract operation UnicodeMatchPropertyValue takes two parameters *p* and *v*, each of which is a List of Unicode code points, and performs the following steps:

1. Assert: *p* is a List of Unicode code points that is identical to a List of Unicode code points that is a canonical, unaliased Unicode property name listed in the "Canonical property name" column of Table 55.
2. Assert: *v* is a List of Unicode code points that is identical to a List of Unicode code points that is a property value or property value alias for Unicode property *p* listed in the "Property value and aliases" column of Table 57 or Table 58.
3. Let *value* be the canonical property value of *v* as given in the "Canonical property value" column of the corresponding row.
4. Return the List of Unicode code points of *value*.

Implementations must support the Unicode property value names and aliases listed in Table 57 and Table 58. To ensure interoperability, implementations must not support any other property value names or aliases.

NOTE 1 For example, **`Xpeo`** and **`Old_Persian`** are valid **`Script_Extensions`** values, but **`xpeo`** and **`Old Persian`** aren't.

NOTE 2 This algorithm differs from the matching rules for symbolic values listed in UAX44: case, white space, U+002D (HYPHEN-MINUS), and U+005F (LOW LINE) are not ignored, and the **`Is`** prefix is not supported.

Table 57: Value aliases and canonical values for the Unicode property `General_Category`

Property value and aliases	Canonical property value

Cased_Letter LC	Cased_Letter
Close_Punctuation Pe	Close_Punctuation
Connector_Punctuation Pc	Connector_Punctuation
Control Cc cntrl	Control
Currency_Symbol Sc	Currency_Symbol
Dash_Punctuation Pd	Dash_Punctuation
Decimal_Number Nd digit	Decimal_Number
Enclosing_Mark Me	Enclosing_Mark
Final_Punctuation Pf	Final_Punctuation
Format Cf	Format
Initial_Punctuation Pi	Initial_Punctuation
Letter L	Letter
Letter_Number Nl	Letter_Number
Line_Separator Zl	Line_Separator
Lowercase_Letter	Lowercase_Letter

Ll	
Mark M Combining_Mark	Mark
Math_Symbol Sm	Math_Symbol
Modifier_Letter Lm	Modifier_Letter
Modifier_Symbol Sk	Modifier_Symbol
Nonspacing_Mark Mn	Nonspacing_Mark
Number N	Number
Open_Punctuation Ps	Open_Punctuation
Other C	Other
Other_Letter Lo	Other_Letter
Other_Number No	Other_Number
Other_Punctuation Po	Other_Punctuation
Other_Symbol So	Other_Symbol
Paragraph_Separator Zp	Paragraph_Separator
Private_Use Co	Private_Use

Punctuation P punct	Punctuation
Separator Z	Separator
Space_Separator Zs	Space_Separator
Spacing_Mark Mc	Spacing_Mark
Surrogate Cs	Surrogate
Symbol S	Symbol
Titlecase_Letter Lt	Titlecase_Letter
Unassigned Cn	Unassigned
Uppercase_Letter Lu	Uppercase_Letter

Table 58: Value aliases and canonical values for the Unicode properties `Script` and `Script_Extensions`

Property value and aliases	Canonical property value
Adlam Adlm	Adlam
Ahom Ahom	Ahom
Anatolian_Hieroglyphs Hluw	Anatolian_Hieroglyphs
Arabic Arab	Arabic
	Armenian

Armenian Armn	
Avestan Avst	Avestan
Balinese Bali	Balinese
Bamum Bamu	Bamum
Bassa_Vah Bass	Bassa_Vah
Batak Batk	Batak
Bengali Beng	Bengali
Bhaiksuki Bhks	Bhaiksuki
Bopomofo Bopo	Bopomofo
Brahmi Brah	Brahmi
Braille Brai	Braille
Buginese Bugi	Buginese
Buhid Buhd	Buhid
Canadian_Aboriginal Cans	Canadian_Aboriginal
Carian Cari	Carian

Caucasian_Albanian Aghb	Caucasian_Albanian
Chakma Cakm	Chakma
Cham Cham	Cham
Cherokee Cher	Cherokee
Common Zyyy	Common
Coptic Copt Qaac	Coptic
Cuneiform Xsux	Cuneiform
Cypriot Cprt	Cypriot
Cyrillic Cyrl	Cyrillic
Deseret Dsrt	Deseret
Devanagari Deva	Devanagari
Dogra Dogr	Dogra
Duployan Dupl	Duployan
Egyptian_Hieroglyphs Egyp	Egyptian_Hieroglyphs
Elbasan Elba	Elbasan

Elymaic Elym	Elymaic
Ethiopic Ethi	Ethiopic
Georgian Geor	Georgian
Glagolitic Glag	Glagolitic
Gothic Goth	Gothic
Grantha Gran	Grantha
Greek Grek	Greek
Gujarati Gujr	Gujarati
Gunjala_Gondi Gong	Gunjala_Gondi
Gurmukhi Guru	Gurmukhi
Han Hani	Han
Hangul Hang	Hangul
Hanifi_Rohingya Rohg	Hanifi_Rohingya
Hanunoo Hano	Hanunoo
Hatran	Hatran

Hatr	
Hebrew Hebr	Hebrew
Hiragana Hira	Hiragana
Imperial_Aramaic Armi	Imperial_Aramaic
Inherited Zinh Qaai	Inherited
Inscriptional_Pahlavi Phli	Inscriptional_Pahlavi
Inscriptional_Parthian Prti	Inscriptional_Parthian
Javanese Java	Javanese
Kaithi Kthi	Kaithi
Kannada Knda	Kannada
Katakana Kana	Katakana
Kayah_Li Kali	Kayah_Li
Kharoshthi Khar	Kharoshthi
Khmer Khmr	Khmer
Khojki Khoj	Khojki

Khudawadi Sind	Khudawadi
Lao Laoo	Lao
Latin Latn	Latin
Lepcha Lepc	Lepcha
Limbu Limb	Limbu
Linear_A Lina	Linear_A
Linear_B Linb	Linear_B
Lisu Lisu	Lisu
Lycian Lyci	Lycian
Lydian Lydi	Lydian
Mahajani Mahj	Mahajani
Makasar Maka	Makasar
Malayalam Mlym	Malayalam
Mandaic Mand	Mandaic
Manichaean Mani	Manichaean

Marchen Marc	Marchen
Medefaidrin Medf	Medefaidrin
Masaram_Gondi Gonm	Masaram_Gondi
Meetei_Mayek Mtei	Meetei_Mayek
Mende_Kikakui Mend	Mende_Kikakui
Meroitic_Cursive Merc	Meroitic_Cursive
Meroitic_Hieroglyphs Mero	Meroitic_Hieroglyphs
Miao Plrd	Miao
Modi Modi	Modi
Mongolian Mong	Mongolian
Mro Mroo	Mro
Multani Mult	Multani
Myanmar Mymr	Myanmar
Nabataean Nbat	Nabataean
Nandinagari Nand	Nandinagari

New_Tai_Lue Talu	New_Tai_Lue
Newa Newa	Newa
Nko Nkoo	Nko
Nushu Nshu	Nushu
Nyiakeng_Puachue_Hmong Hmnp	Nyiakeng_Puachue_Hmong
Ogham Ogam	Ogham
Ol_Chiki Olck	Ol_Chiki
Old_Hungarian Hung	Old_Hungarian
Old_Italic Ital	Old_Italic
Old_North_Arabian Narb	Old_North_Arabian
Old_Permic Perm	Old_Permic
Old_Persian Xpeo	Old_Persian
Old_Sogdian Sogo	Old_Sogdian
Old_South_Arabian Sarb	Old_South_Arabian
Old_Turkic Orkh	Old_Turkic

Oriya Orya	Oriya
Osage Osge	Osage
Osmanya Osma	Osmanya
Pahawh_Hmong Hmng	Pahawh_Hmong
Palmyrene Palm	Palmyrene
Pau_Cin_Hau Pauc	Pau_Cin_Hau
Phags_Pa Phag	Phags_Pa
Phoenician Phnx	Phoenician
Psalter_Pahlavi Phlp	Psalter_Pahlavi
Rejang Rjng	Rejang
Runic Runr	Runic
Samaritan Samr	Samaritan
Saurashtra Saur	Saurashtra
Sharada Shrd	Sharada
Shavian Shaw	Shavian

Siddham Sidd	Siddham
SignWriting Sgnw	SignWriting
Sinhala Sinh	Sinhala
Sogdian Sogd	Sogdian
Sora_Sompeng Sora	Sora_Sompeng
Soyombo Soyo	Soyombo
Sundanese Sund	Sundanese
Syloti_Nagri Sylo	Syloti_Nagri
Syriac Syrc	Syriac
Tagalog Tglg	Tagalog
Tagbanwa Tagb	Tagbanwa
Tai_Le Tale	Tai_Le
Tai_Tham Lana	Tai_Tham
Tai_Viet Tavt	Tai_Viet
Takri Takr	Takri

Tamil Taml	Tamil
Tangut Tang	Tangut
Telugu Telu	Telugu
Thaana Thaa	Thaana
Thai Thai	Thai
Tibetan Tibt	Tibetan
Tifinagh Tfng	Tifinagh
Tirhuta Tirh	Tirhuta
Ugaritic Ugar	Ugaritic
Vai Vaii	Vai
Wancho Wcho	Wancho
Warang_Citi Wara	Warang_Citi
Yi Yiii	Yi
Zanabazar_Square Zanb	Zanabazar_Square

21.2.2.9 AtomEscape

With parameter *direction*.

The production *AtomEscape* :: *DecimalEscape* evaluates as follows:

1. Evaluate *DecimalEscape* to obtain an integer *n*.
2. Assert: $n \leq NcapturingParens$.
3. Call BackreferenceMatcher(*n*, *direction*) and return its Matcher result.

The production *AtomEscape* :: *CharacterEscape* evaluates as follows:

1. Evaluate *CharacterEscape* to obtain a character *ch*.
2. Let *A* be a one-element CharSet containing the character *ch*.
3. Call CharacterSetMatcher(*A*, **false**, *direction*) and return its Matcher result.

The production *AtomEscape* :: *CharacterClassEscape* evaluates as follows:

1. Evaluate *CharacterClassEscape* to obtain a CharSet *A*.
2. Call CharacterSetMatcher(*A*, **false**, *direction*) and return its Matcher result.

NOTE An escape sequence of the form **** followed by a nonzero decimal number *n* matches the result of the nth set of capturing parentheses (21.2.2.1). It is an error if the regular expression has fewer than *n* capturing parentheses. If the regular expression has *n* or more capturing parentheses but the nth one is **undefined** because it has not captured anything, then the backreference always succeeds.

The production *AtomEscape* :: `k` *GroupName* evaluates as follows:

1. Search the enclosing *Pattern* for an instance of a *GroupSpecifier* for a *RegExpIdentifierName* which has a StringValue equal to the StringValue of the *RegExpIdentifierName* contained in *GroupName*.
2. Assert: A unique such *GroupSpecifier* is found.
3. Let *parenIndex* be the number of left-capturing parentheses in the entire regular expression that occur to the left of the located *GroupSpecifier*. This is the total number of *Atom* :: `(` *GroupSpecifier* *Disjunction* `)` Parse Nodes prior to or enclosing the located *GroupSpecifier*.
4. Call BackreferenceMatcher(*parenIndex*, *direction*) and return its Matcher result.

21.2.2.9.1 Runtime Semantics: BackreferenceMatcher (*n*, *direction*)

The abstract operation BackreferenceMatcher takes two arguments, an integer *n* and an integer *direction*, and performs the following steps:

1. Return a new Matcher with parameters (*x*, *c*) that captures *n* and *direction* and performs the following steps when called:
    a. Assert: *x* is a State.
    b. Assert: *c* is a Continuation.
    c. Let *cap* be *x*'s *captures* List.
    d. Let *s* be *cap*[*n*].
    e. If *s* is **undefined**, return *c*(*x*).
    f. Let *e* be *x*'s *endIndex*.
    g. Let *len* be the number of elements in *s*.
    h. Let *f* be $e + direction \times len$.

i. If $f < 0$ or $f > InputLength$, return failure.
j. Let g be min(e, f).
k. If there exists an integer i between 0 (inclusive) and len (exclusive) such that Canonicalize($s[i]$) is not the same character value as Canonicalize($Input[g + i]$), return failure.
l. Let y be the State (f, cap).
m. Call $c(y)$ and return its result.

21.2.2.10 CharacterEscape

The *CharacterEscape* productions evaluate as follows:

CharacterEscape **::**
  ControlEscape
  c *ControlLetter*
  0 [lookahead ∉ *DecimalDigit*]
  HexEscapeSequence
  RegExpUnicodeEscapeSequence
  IdentityEscape

1. Let cv be the CharacterValue of this *CharacterEscape*.
2. Return the character whose character value is cv.

21.2.2.11 DecimalEscape

The *DecimalEscape* productions evaluate as follows:

DecimalEscape **::** *NonZeroDigit* *DecimalDigits*$_{opt}$

1. Return the CapturingGroupNumber of this *DecimalEscape*.

NOTE If **** is followed by a decimal number n whose first digit is not **0**, then the escape sequence is considered to be a backreference. It is an error if n is greater than the total number of left-capturing parentheses in the entire regular expression.

21.2.2.12 CharacterClassEscape

The production *CharacterClassEscape* **::** **d** evaluates as follows:

1. Return the ten-element set of characters containing the characters **0** through **9** inclusive.

The production *CharacterClassEscape* **::** **D** evaluates as follows:

1. Return the set of all characters not included in the set returned by *CharacterClassEscape* **::** **d** .

The production *CharacterClassEscape* **::** **s** evaluates as follows:

1. Return the set of characters containing the characters that are on the right-hand side of the *WhiteSpace* or *LineTerminator* productions.

The production *CharacterClassEscape* **::** **S** evaluates as follows:

1. Return the set of all characters not included in the set returned by *CharacterClassEscape* :: `s` .

The production *CharacterClassEscape* :: `w` evaluates as follows:

1. Return the set of all characters returned by WordCharacters().

The production *CharacterClassEscape* :: `W` evaluates as follows:

1. Return the set of all characters not included in the set returned by *CharacterClassEscape* :: `w` .

The production *CharacterClassEscape* :: `p{` *UnicodePropertyValueExpression* `}` evaluates as follows:

1. Return the CharSet containing all Unicode code points included in the CharSet returned by *UnicodePropertyValueExpression*.

The production *CharacterClassEscape* :: `P{` *UnicodePropertyValueExpression* `}` evaluates as follows:

1. Return the CharSet containing all Unicode code points not included in the CharSet returned by *UnicodePropertyValueExpression*.

The production *UnicodePropertyValueExpression* :: *UnicodePropertyName* `=` *UnicodePropertyValue* evaluates as follows:

1. Let *ps* be SourceText of *UnicodePropertyName*.
2. Let *p* be ! UnicodeMatchProperty(*ps*).
3. Assert: *p* is a Unicode property name or property alias listed in the "Property name and aliases" column of Table 55.
4. Let *vs* be SourceText of *UnicodePropertyValue*.
5. Let *v* be ! UnicodeMatchPropertyValue(*p*, *vs*).
6. Return the CharSet containing all Unicode code points whose character database definition includes the property *p* with value *v*.

The production *UnicodePropertyValueExpression* :: *LoneUnicodePropertyNameOrValue* evaluates as follows:

1. Let *s* be SourceText of *LoneUnicodePropertyNameOrValue*.
2. If ! UnicodeMatchPropertyValue(**`General_Category`**, *s*) is identical to a List of Unicode code points that is the name of a Unicode general category or general category alias listed in the "Property value and aliases" column of Table 57, then
   a. Return the CharSet containing all Unicode code points whose character database definition includes the property "General_Category" with value *s*.
3. Let *p* be ! UnicodeMatchProperty(*s*).
4. Assert: *p* is a binary Unicode property or binary property alias listed in the "Property name and aliases" column of Table 56.
5. Return the CharSet containing all Unicode code points whose character database definition includes the property *p* with value "True".

21.2.2.13 CharacterClass

The production *CharacterClass* :: `[` *ClassRanges* `]` evaluates as follows:

1. Evaluate *ClassRanges* to obtain a CharSet *A*.
2. Return the two results *A* and **false**.

The production *CharacterClass* :: [^ *ClassRanges*] evaluates as follows:

1. Evaluate *ClassRanges* to obtain a CharSet *A*.
2. Return the two results *A* and **true**.

21.2.2.14 ClassRanges

The production *ClassRanges* :: [empty] evaluates as follows:

1. Return the empty CharSet.

The production *ClassRanges* :: *NonemptyClassRanges* evaluates as follows:

1. Return the CharSet that is the result of evaluating *NonemptyClassRanges*.

21.2.2.15 NonemptyClassRanges

The production *NonemptyClassRanges* :: *ClassAtom* evaluates as follows:

1. Return the CharSet that is the result of evaluating *ClassAtom*.

The production *NonemptyClassRanges* :: *ClassAtom* *NonemptyClassRangesNoDash* evaluates as follows:

1. Evaluate *ClassAtom* to obtain a CharSet *A*.
2. Evaluate *NonemptyClassRangesNoDash* to obtain a CharSet *B*.
3. Return the union of CharSets *A* and *B*.

The production *NonemptyClassRanges* :: *ClassAtom* - *ClassAtom* *ClassRanges* evaluates as follows:

1. Evaluate the first *ClassAtom* to obtain a CharSet *A*.
2. Evaluate the second *ClassAtom* to obtain a CharSet *B*.
3. Evaluate *ClassRanges* to obtain a CharSet *C*.
4. Call CharacterRange(*A*, *B*) and let *D* be the resulting CharSet.
5. Return the union of CharSets *D* and *C*.

21.2.2.15.1 Runtime Semantics: CharacterRange (*A*, *B*)

The abstract operation CharacterRange takes two CharSet parameters *A* and *B* and performs the following steps:

1. Assert: *A* and *B* each contain exactly one character.
2. Let *a* be the one character in CharSet *A*.
3. Let *b* be the one character in CharSet *B*.
4. Let *i* be the character value of character *a*.
5. Let *j* be the character value of character *b*.
6. Assert: $i \leq j$.
7. Return the set containing all characters numbered *i* through *j*, inclusive.

21.2.2.16 NonemptyClassRangesNoDash

The production *NonemptyClassRangesNoDash* :: *ClassAtom* evaluates as follows:

1. Return the CharSet that is the result of evaluating *ClassAtom*.

The production *NonemptyClassRangesNoDash* **::** *ClassAtomNoDash* *NonemptyClassRangesNoDash* evaluates as follows:

1. Evaluate *ClassAtomNoDash* to obtain a CharSet *A*.
2. Evaluate *NonemptyClassRangesNoDash* to obtain a CharSet *B*.
3. Return the union of CharSets *A* and *B*.

The production *NonemptyClassRangesNoDash* **::** *ClassAtomNoDash* **-** *ClassAtom* *ClassRanges* evaluates as follows:

1. Evaluate *ClassAtomNoDash* to obtain a CharSet *A*.
2. Evaluate *ClassAtom* to obtain a CharSet *B*.
3. Evaluate *ClassRanges* to obtain a CharSet *C*.
4. Call CharacterRange(*A*, *B*) and let *D* be the resulting CharSet.
5. Return the union of CharSets *D* and *C*.

NOTE 1 *ClassRanges* can expand into a single *ClassAtom* and/or ranges of two *ClassAtom* separated by dashes. In the latter case the *ClassRanges* includes all characters between the first *ClassAtom* and the second *ClassAtom*, inclusive; an error occurs if either *ClassAtom* does not represent a single character (for example, if one is \w) or if the first *ClassAtom*'s character value is greater than the second *ClassAtom*'s character value.

NOTE 2 Even if the pattern ignores case, the case of the two ends of a range is significant in determining which characters belong to the range. Thus, for example, the pattern **/[E-F]/i** matches only the letters **E**, **F**, **e**, and **f**, while the pattern **/[E-f]/i** matches all upper and lower-case letters in the Unicode Basic Latin block as well as the symbols **[**, ****, **]**, **^**, **_**, and **`**.

NOTE 3 A **-** character can be treated literally or it can denote a range. It is treated literally if it is the first or last character of *ClassRanges*, the beginning or end limit of a range specification, or immediately follows a range specification.

21.2.2.17 ClassAtom

The production *ClassAtom* **::** **-** evaluates as follows:

1. Return the CharSet containing the single character **-** U+002D (HYPHEN-MINUS).

The production *ClassAtom* **::** *ClassAtomNoDash* evaluates as follows:

1. Return the CharSet that is the result of evaluating *ClassAtomNoDash*.

21.2.2.18 ClassAtomNoDash

The production *ClassAtomNoDash* **::** *SourceCharacter* but not one of **** or **]** or **-** evaluates as follows:

1. Return the CharSet containing the character matched by *SourceCharacter*.

The production *ClassAtomNoDash* **::** **** *ClassEscape* evaluates as follows:

1. Return the CharSet that is the result of evaluating *ClassEscape*.

21.2.2.19 ClassEscape

The *ClassEscape* productions evaluate as follows:

ClassEscape :: `b`
ClassEscape :: `-`
ClassEscape :: *CharacterEscape*

1. Let *cv* be the CharacterValue of this *ClassEscape*.
2. Let *c* be the character whose character value is *cv*.
3. Return the CharSet containing the single character *c*.

ClassEscape :: *CharacterClassEscape*

1. Return the CharSet that is the result of evaluating *CharacterClassEscape*.

> NOTE A *ClassAtom* can use any of the escape sequences that are allowed in the rest of the regular expression except for `\b`, `\B`, and backreferences. Inside a *CharacterClass*, `\b` means the backspace character, while `\B` and backreferences raise errors. Using a backreference inside a *ClassAtom* causes an error.

21.2.3 The RegExp Constructor

The RegExp constructor:

- is the intrinsic object *%RegExp%*.
- is the initial value of the **"RegExp"** property of the global object.
- creates and initializes a new RegExp object when called as a function rather than as a constructor. Thus the function call `RegExp(…)` is equivalent to the object creation expression `new RegExp(…)` with the same arguments.
- is designed to be subclassable. It may be used as the value of an `extends` clause of a class definition. Subclass constructors that intend to inherit the specified `RegExp` behaviour must include a `super` call to the `RegExp` constructor to create and initialize subclass instances with the necessary internal slots.

21.2.3.1 RegExp (*pattern*, *flags*)

The following steps are taken:

1. Let *patternIsRegExp* be ? IsRegExp(*pattern*).
2. If NewTarget is **undefined**, then
   a. Let *newTarget* be the active function object.
   b. If *patternIsRegExp* is **true** and *flags* is **undefined**, then
      i. Let *patternConstructor* be ? Get(*pattern*, **"constructor"**).
      ii. If SameValue(*newTarget*, *patternConstructor*) is **true**, return *pattern*.
3. Else, let *newTarget* be NewTarget.
4. If Type(*pattern*) is Object and *pattern* has a [[RegExpMatcher]] internal slot, then
   a. Let *P* be *pattern*.[[OriginalSource]].

b. If *flags* is **undefined**, let *F* be *pattern*.[[OriginalFlags]].
c. Else, let *F* be *flags*.
5. Else if *patternIsRegExp* is **true**, then
a. Let *P* be ? Get(*pattern*, **"source"**).
b. If *flags* is **undefined**, then
i. Let *F* be ? Get(*pattern*, **"flags"**).
c. Else, let *F* be *flags*.
6. Else,
a. Let *P* be *pattern*.
b. Let *F* be *flags*.
7. Let *O* be ? RegExpAlloc(*newTarget*).
8. Return ? RegExpInitialize(*O*, *P*, *F*).

NOTE If pattern is supplied using a *StringLiteral*, the usual escape sequence substitutions are performed before the String is processed by RegExp. If pattern must contain an escape sequence to be recognized by RegExp, any U+005C (REVERSE SOLIDUS) code points must be escaped within the *StringLiteral* to prevent them being removed when the contents of the *StringLiteral* are formed.

21.2.3.2 Abstract Operations for the RegExp Constructor

21.2.3.2.1 Runtime Semantics: RegExpAlloc (*newTarget*)

When the abstract operation RegExpAlloc with argument *newTarget* is called, the following steps are taken:

1. Let *obj* be ? OrdinaryCreateFromConstructor(*newTarget*, **"%RegExp.prototype%"**, « [[RegExpMatcher]], [[OriginalSource]], [[OriginalFlags]] »).
2. Perform ! DefinePropertyOrThrow(*obj*, **"lastIndex"**, PropertyDescriptor { [[Writable]]: **true**, [[Enumerable]]: **false**, [[Configurable]]: **false** }).
3. Return *obj*.

21.2.3.2.2 Runtime Semantics: RegExpInitialize (*obj*, *pattern*, *flags*)

When the abstract operation RegExpInitialize with arguments *obj*, *pattern*, and *flags* is called, the following steps are taken:

1. If *pattern* is **undefined**, let *P* be the empty String.
2. Else, let *P* be ? ToString(*pattern*).
3. If *flags* is **undefined**, let *F* be the empty String.
4. Else, let *F* be ? ToString(*flags*).
5. If *F* contains any code unit other than **"g"**, **"i"**, **"m"**, **"s"**, **"u"**, or **"y"** or if it contains the same code unit more than once, throw a **SyntaxError** exception.
6. If *F* contains **"u"**, let *BMP* be **false**; else let *BMP* be **true**.
7. If *BMP* is **true**, then
a. Let *pText* be the sequence of code points resulting from interpreting each of the 16-bit elements of *P* as a Unicode BMP code point. UTF-16 decoding is not applied to the elements.
b. Parse *pText* using the grammars in 21.2.1. The goal symbol for the parse is $Pattern_{[\sim U,\ \sim N]}$. If the result of parsing contains a *GroupName*, reparse with the goal symbol $Pattern_{[\sim U,\ +N]}$ and use this result instead.

Throw a **SyntaxError** exception if *pText* did not conform to the grammar, if any elements of *pText* were not matched by the parse, or if any Early Error conditions exist.

c. Let *patternCharacters* be a List whose elements are the code unit elements of *P*.

8. Else,
   a. Let *pText* be ! UTF16DecodeString(*P*).
   b. Parse *pText* using the grammars in 21.2.1. The goal symbol for the parse is $Pattern_{[+U,\ +N]}$. Throw a **SyntaxError** exception if *pText* did not conform to the grammar, if any elements of *pText* were not matched by the parse, or if any Early Error conditions exist.
   c. Let *patternCharacters* be a List whose elements are the code points of *pText*.
9. Set *obj*.[[OriginalSource]] to *P*.
10. Set *obj*.[[OriginalFlags]] to *F*.
11. Set *obj*.[[RegExpMatcher]] to the abstract closure that evaluates the above parse by applying the semantics provided in 21.2.2 using *patternCharacters* as the pattern's List of *SourceCharacter* values and *F* as the flag parameters.
12. Perform ? Set(*obj*, **"lastIndex"**, 0, **true**).
13. Return *obj*.

21.2.3.2.3 Runtime Semantics: RegExpCreate (*P*, *F*)

When the abstract operation RegExpCreate with arguments *P* and *F* is called, the following steps are taken:

1. Let *obj* be ? RegExpAlloc(%RegExp%).
2. Return ? RegExpInitialize(*obj*, *P*, *F*).

21.2.3.2.4 Runtime Semantics: EscapeRegExpPattern (*P*, *F*)

When the abstract operation EscapeRegExpPattern with arguments *P* and *F* is called, the following occurs:

1. Let *S* be a String in the form of a $Pattern_{[\sim U]}$ ($Pattern_{[+U]}$ if *F* contains **"u"**) equivalent to *P* interpreted as UTF-16 encoded Unicode code points (6.1.4), in which certain code points are escaped as described below. *S* may or may not be identical to *P*; however, the abstract closure that would result from evaluating *S* as a $Pattern_{[\sim U]}$ ($Pattern_{[+U]}$ if *F* contains **"u"**) must behave identically to the abstract closure given by the constructed object's [[RegExpMatcher]] internal slot. Multiple calls to this abstract operation using the same values for *P* and *F* must produce identical results.
2. The code points **/** or any *LineTerminator* occurring in the pattern shall be escaped in *S* as necessary to ensure that the string-concatenation of **"/"**, *S*, **"/"**, and *F* can be parsed (in an appropriate lexical context) as a *RegularExpressionLiteral* that behaves identically to the constructed regular expression. For example, if *P* is **"/"**, then *S* could be **"\/"** or **"\u002F"**, among other possibilities, but not **"/"**, because **///** followed by *F* would be parsed as a *SingleLineComment* rather than a *RegularExpressionLiteral*. If *P* is the empty String, this specification can be met by letting *S* be **"(?:)"**.
3. Return *S*.

21.2.4 Properties of the RegExp Constructor

The RegExp constructor:

- has a [[Prototype]] internal slot whose value is %Function.prototype%.
- has the following properties:

21.2.4.1 RegExp.prototype

The initial value of **`RegExp.prototype`** is %RegExp.prototype%.

This property has the attributes { [[Writable]]: **false**, [[Enumerable]]: **false**, [[Configurable]]: **false** }.

21.2.4.2 get RegExp [@@species]

`RegExp[@@species]` is an accessor property whose set accessor function is **undefined**. Its get accessor function performs the following steps:

1. Return the **this** value.

The value of the **"name"** property of this function is **"get [Symbol.species]"**.

> NOTE RegExp prototype methods normally use their **this** object's constructor to create a derived object. However, a subclass constructor may over-ride that default behaviour by redefining its @@species property.

21.2.5 Properties of the RegExp Prototype Object

The RegExp prototype object:

- is the intrinsic object *%RegExpPrototype%*.
- is an ordinary object.
- is not a RegExp instance and does not have a [[RegExpMatcher]] internal slot or any of the other internal slots of RegExp instance objects.
- has a [[Prototype]] internal slot whose value is %Object.prototype%.

> NOTE The RegExp prototype object does not have a **"valueOf"** property of its own; however, it inherits the **"valueOf"** property from the Object prototype object.

21.2.5.1 RegExp.prototype.constructor

The initial value of **`RegExp.prototype.constructor`** is %RegExp%.

21.2.5.2 RegExp.prototype.exec (*string*)

Performs a regular expression match of *string* against the regular expression and returns an Array object containing the results of the match, or **null** if *string* did not match.

The String ToString(*string*) is searched for an occurrence of the regular expression pattern as follows:

1. Let *R* be the **this** value.
2. Perform ? RequireInternalSlot(*R*, [[RegExpMatcher]]).
3. Let *S* be ? ToString(*string*).
4. Return ? RegExpBuiltinExec(*R*, *S*).

21.2.5.2.1 Runtime Semantics: RegExpExec (*R*, *S*)

The abstract operation RegExpExec with arguments *R* and *S* performs the following steps:

1. Assert: Type(*R*) is Object.
2. Assert: Type(*S*) is String.
3. Let *exec* be ? Get(*R*, **"exec"**).
4. If IsCallable(*exec*) is **true**, then
    a. Let *result* be ? Call(*exec*, *R*, « *S* »).
    b. If Type(*result*) is neither Object nor Null, throw a **TypeError** exception.
    c. Return *result*.
5. Perform ? RequireInternalSlot(*R*, [[RegExpMatcher]]).
6. Return ? RegExpBuiltinExec(*R*, *S*).

NOTE If a callable **"exec"** property is not found this algorithm falls back to attempting to use the built-in RegExp matching algorithm. This provides compatible behaviour for code written for prior editions where most built-in algorithms that use regular expressions did not perform a dynamic property lookup of **"exec"**.

21.2.5.2.2 Runtime Semantics: RegExpBuiltinExec (*R*, *S*)

The abstract operation RegExpBuiltinExec with arguments *R* and *S* performs the following steps:

1. Assert: *R* is an initialized RegExp instance.
2. Assert: Type(*S*) is String.
3. Let *length* be the number of code units in *S*.
4. Let *lastIndex* be ? ToLength(? Get(*R*, **"lastIndex"**)).
5. Let *flags* be *R*.[[OriginalFlags]].
6. If *flags* contains **"g"**, let *global* be **true**; else let *global* be **false**.
7. If *flags* contains **"y"**, let *sticky* be **true**; else let *sticky* be **false**.
8. If *global* is **false** and *sticky* is **false**, set *lastIndex* to 0.
9. Let *matcher* be *R*.[[RegExpMatcher]].
10. If *flags* contains **"u"**, let *fullUnicode* be **true**; else let *fullUnicode* be **false**.
11. Let *matchSucceeded* be **false**.
12. Repeat, while *matchSucceeded* is **false**
    a. If *lastIndex* > *length*, then
        i. If *global* is **true** or *sticky* is **true**, then
            1. Perform ? Set(*R*, **"lastIndex"**, 0, **true**).
        ii. Return **null**.
    b. Let *r* be *matcher*(*S*, *lastIndex*).
    c. If *r* is failure, then
        i. If *sticky* is **true**, then
            1. Perform ? Set(*R*, **"lastIndex"**, 0, **true**).
            2. Return **null**.
        ii. Set *lastIndex* to AdvanceStringIndex(*S*, *lastIndex*, *fullUnicode*).
    d. Else,
        i. Assert: *r* is a State.
        ii. Set *matchSucceeded* to **true**.
13. Let *e* be *r*'s *endIndex* value.
14. If *fullUnicode* is **true**, then

a. *e* is an index into the *Input* character list, derived from *S*, matched by *matcher*. Let *eUTF* be the smallest index into *S* that corresponds to the character at element *e* of *Input*. If *e* is greater than or equal to the number of elements in *Input*, then *eUTF* is the number of code units in *S*.
b. Set *e* to *eUTF*.

15. If *global* is **true** or *sticky* is **true**, then
    a. Perform ? Set(*R*, **"lastIndex"**, *e*, **true**).
16. Let *n* be the number of elements in *r*'s *captures* List. (This is the same value as 21.2.2.1's *NcapturingParens*.)
17. Assert: $n < 2^{32} - 1$.
18. Let *A* be ! ArrayCreate($n + 1$).
19. Assert: The value of *A*'s **"length"** property is $n + 1$.
20. Perform ! CreateDataPropertyOrThrow(*A*, **"index"**, *lastIndex*).
21. Perform ! CreateDataPropertyOrThrow(*A*, **"input"**, *S*).
22. Let *matchedSubstr* be the matched substring (i.e. the portion of *S* between offset *lastIndex* inclusive and offset *e* exclusive).
23. Perform ! CreateDataPropertyOrThrow(*A*, **"0"**, *matchedSubstr*).
24. If *R* contains any *GroupName*, then
    a. Let *groups* be OrdinaryObjectCreate(**null**).
25. Else,
    a. Let *groups* be **undefined**.
26. Perform ! CreateDataPropertyOrThrow(*A*, **"groups"**, *groups*).
27. For each integer *i* such that $i > 0$ and $i \leq n$, do
    a. Let *captureI* be i^{th} element of *r*'s *captures* List.
    b. If *captureI* is **undefined**, let *capturedValue* be **undefined**.
    c. Else if *fullUnicode* is **true**, then
        i. Assert: *captureI* is a List of code points.
        ii. Let *capturedValue* be ! UTF16Encode(*captureI*).
    d. Else,
        i. Assert: *fullUnicode* is **false**.
        ii. Assert: *captureI* is a List of code units.
        iii. Let *capturedValue* be the String value consisting of the code units of *captureI*.
    e. Perform ! CreateDataPropertyOrThrow(*A*, ! ToString(*i*), *capturedValue*).
    f. If the ith capture of *R* was defined with a *GroupName*, then
        i. Let *s* be the StringValue of the corresponding *RegExpIdentifierName*.
        ii. Perform ! CreateDataPropertyOrThrow(*groups*, *s*, *capturedValue*).
28. Return *A*.

21.2.5.2.3 AdvanceStringIndex (*S*, *index*, *unicode*)

The abstract operation AdvanceStringIndex with arguments *S*, *index*, and *unicode* performs the following steps:

1. Assert: Type(*S*) is String.
2. Assert: $0 \leq index \leq 2^{53} - 1$ and ! IsInteger(*index*) is **true**.
3. Assert: Type(*unicode*) is Boolean.
4. If *unicode* is **false**, return $index + 1$.
5. Let *length* be the number of code units in *S*.
6. If $index + 1 \geq length$, return $index + 1$.
7. Let *cp* be ! CodePointAt(*S*, *index*).
8. Return *index* + *cp*.[[CodeUnitCount]].

21.2.5.3 get RegExp.prototype.dotAll

`RegExp.prototype.dotAll` is an accessor property whose set accessor function is **undefined**. Its get accessor function performs the following steps:

1. Let *R* be the **this** value.
2. If Type(*R*) is not Object, throw a **TypeError** exception.
3. If *R* does not have an [[OriginalFlags]] internal slot, then
    a. If SameValue(*R*, %RegExp.prototype%) is **true**, return **undefined**.
    b. Otherwise, throw a **TypeError** exception.
4. Let *flags* be *R*.[[OriginalFlags]].
5. If *flags* contains the code unit 0x0073 (LATIN SMALL LETTER S), return **true**.
6. Return **false**.

21.2.5.4 get RegExp.prototype.flags

`RegExp.prototype.flags` is an accessor property whose set accessor function is **undefined**. Its get accessor function performs the following steps:

1. Let *R* be the **this** value.
2. If Type(*R*) is not Object, throw a **TypeError** exception.
3. Let *result* be the empty String.
4. Let *global* be ! ToBoolean(? Get(*R*, **"global"**)).
5. If *global* is **true**, append the code unit 0x0067 (LATIN SMALL LETTER G) as the last code unit of *result*.
6. Let *ignoreCase* be ! ToBoolean(? Get(*R*, **"ignoreCase"**)).
7. If *ignoreCase* is **true**, append the code unit 0x0069 (LATIN SMALL LETTER I) as the last code unit of *result*.
8. Let *multiline* be ! ToBoolean(? Get(*R*, **"multiline"**)).
9. If *multiline* is **true**, append the code unit 0x006D (LATIN SMALL LETTER M) as the last code unit of *result*.
10. Let *dotAll* be ! ToBoolean(? Get(*R*, **"dotAll"**)).
11. If *dotAll* is **true**, append the code unit 0x0073 (LATIN SMALL LETTER S) as the last code unit of *result*.
12. Let *unicode* be ! ToBoolean(? Get(*R*, **"unicode"**)).
13. If *unicode* is **true**, append the code unit 0x0075 (LATIN SMALL LETTER U) as the last code unit of *result*.
14. Let *sticky* be ! ToBoolean(? Get(*R*, **"sticky"**)).
15. If *sticky* is **true**, append the code unit 0x0079 (LATIN SMALL LETTER Y) as the last code unit of *result*.
16. Return *result*.

21.2.5.5 get RegExp.prototype.global

`RegExp.prototype.global` is an accessor property whose set accessor function is **undefined**. Its get accessor function performs the following steps:

1. Let *R* be the **this** value.
2. If Type(*R*) is not Object, throw a **TypeError** exception.
3. If *R* does not have an [[OriginalFlags]] internal slot, then
    a. If SameValue(*R*, %RegExp.prototype%) is **true**, return **undefined**.
    b. Otherwise, throw a **TypeError** exception.
4. Let *flags* be *R*.[[OriginalFlags]].
5. If *flags* contains the code unit 0x0067 (LATIN SMALL LETTER G), return **true**.
6. Return **false**.

21.2.5.6 get RegExp.prototype.ignoreCase

`RegExp.prototype.ignoreCase` is an accessor property whose set accessor function is **undefined**. Its get accessor function performs the following steps:

1. Let *R* be the **this** value.
2. If Type(*R*) is not Object, throw a **TypeError** exception.
3. If *R* does not have an [[OriginalFlags]] internal slot, then
   a. If SameValue(*R*, %RegExp.prototype%) is **true**, return **undefined**.
   b. Otherwise, throw a **TypeError** exception.
4. Let *flags* be *R*.[[OriginalFlags]].
5. If *flags* contains the code unit 0x0069 (LATIN SMALL LETTER I), return **true**.
6. Return **false**.

21.2.5.7 RegExp.prototype [@@match] (*string*)

When the **`@@match`** method is called with argument *string*, the following steps are taken:

1. Let *rx* be the **this** value.
2. If Type(*rx*) is not Object, throw a **TypeError** exception.
3. Let *S* be ? ToString(*string*).
4. Let *global* be ! ToBoolean(? Get(*rx*, **"global"**)).
5. If *global* is **false**, then
   a. Return ? RegExpExec(*rx*, *S*).
6. Else,
   a. Assert: *global* is **true**.
   b. Let *fullUnicode* be ! ToBoolean(? Get(*rx*, **"unicode"**)).
   c. Perform ? Set(*rx*, **"lastIndex"**, 0, **true**).
   d. Let *A* be ! ArrayCreate(0).
   e. Let *n* be 0.
   f. Repeat,
      i. Let *result* be ? RegExpExec(*rx*, *S*).
      ii. If *result* is **null**, then
         1. If $n = 0$, return **null**.
         2. Return *A*.
      iii. Else,
         1. Let *matchStr* be ? ToString(? Get(*result*, **"0"**)).
         2. Perform ! CreateDataPropertyOrThrow(*A*, ! ToString(*n*), *matchStr*).
         3. If *matchStr* is the empty String, then
            a. Let *thisIndex* be ? ToLength(? Get(*rx*, **"lastIndex"**)).
            b. Let *nextIndex* be AdvanceStringIndex(*S*, *thisIndex*, *fullUnicode*).
            c. Perform ? Set(*rx*, **"lastIndex"**, *nextIndex*, **true**).
         4. Set *n* to $n + 1$.

The value of the **"name"** property of this function is **"[Symbol.match]"**.

NOTE The @@match property is used by the IsRegExp abstract operation to identify objects that have the basic behaviour of regular expressions. The absence of a @@match property or the existence of such a property whose value does not Boolean coerce to **true** indicates that the object is not intended to be used as a regular expression object.

21.2.5.8 RegExp.prototype [@@matchAll] (*string*)

When the **`@@matchAll`** method is called with argument *string*, the following steps are taken:

1. Let *R* be the **this** value.
2. If Type(*R*) is not Object, throw a **TypeError** exception.
3. Let *S* be ? ToString(*string*).
4. Let *C* be ? SpeciesConstructor(*R*, %RegExp%).
5. Let *flags* be ? ToString(? Get(*R*, **"flags"**)).
6. Let *matcher* be ? Construct(*C*, « *R*, *flags* »).
7. Let *lastIndex* be ? ToLength(? Get(*R*, **"lastIndex"**)).
8. Perform ? Set(*matcher*, **"lastIndex"**, *lastIndex*, **true**).
9. If *flags* contains **"g"**, let *global* be **true**.
10. Else, let *global* be **false**.
11. If *flags* contains **"u"**, let *fullUnicode* be **true**.
12. Else, let *fullUnicode* be **false**.
13. Return ! CreateRegExpStringIterator(*matcher*, *S*, *global*, *fullUnicode*).

The value of the **"name"** property of this function is **"[Symbol.matchAll]"**.

21.2.5.8.1 CreateRegExpStringIterator (*R*, *S*, *global*, *fullUnicode*)

The abstract operation CreateRegExpStringIterator is used to create such iterator objects. It performs the following steps:

1. Assert: Type(*S*) is String.
2. Assert: Type(*global*) is Boolean.
3. Assert: Type(*fullUnicode*) is Boolean.
4. Let *iterator* be OrdinaryObjectCreate(%RegExpStringIteratorPrototype%, « [[IteratingRegExp]], [[IteratedString]], [[Global]], [[Unicode]], [[Done]] »).
5. Set *iterator*.[[IteratingRegExp]] to *R*.
6. Set *iterator*.[[IteratedString]] to *S*.
7. Set *iterator*.[[Global]] to *global*.
8. Set *iterator*.[[Unicode]] to *fullUnicode*.
9. Set *iterator*.[[Done]] to **false**.
10. Return *iterator*.

21.2.5.9 get RegExp.prototype.multiline

`RegExp.prototype.multiline` is an accessor property whose set accessor function is **undefined**. Its get accessor function performs the following steps:

1. Let *R* be the **this** value.

2. If Type(*R*) is not Object, throw a **TypeError** exception.
3. If *R* does not have an [[OriginalFlags]] internal slot, then
    a. If SameValue(*R*, %RegExp.prototype%) is **true**, return **undefined**.
    b. Otherwise, throw a **TypeError** exception.
4. Let *flags* be *R*.[[OriginalFlags]].
5. If *flags* contains the code unit 0x006D (LATIN SMALL LETTER M), return **true**.
6. Return **false**.

21.2.5.10 RegExp.prototype [@@replace] (*string*, *replaceValue*)

When the **`@@replace`** method is called with arguments *string* and *replaceValue*, the following steps are taken:

1. Let *rx* be the **this** value.
2. If Type(*rx*) is not Object, throw a **TypeError** exception.
3. Let *S* be ? ToString(*string*).
4. Let *lengthS* be the number of code unit elements in *S*.
5. Let *functionalReplace* be IsCallable(*replaceValue*).
6. If *functionalReplace* is **false**, then
    a. Set *replaceValue* to ? ToString(*replaceValue*).
7. Let *global* be ! ToBoolean(? Get(*rx*, **"global"**)).
8. If *global* is **true**, then
    a. Let *fullUnicode* be ! ToBoolean(? Get(*rx*, **"unicode"**)).
    b. Perform ? Set(*rx*, **"lastIndex"**, 0, **true**).
9. Let *results* be a new empty List.
10. Let *done* be **false**.
11. Repeat, while *done* is **false**
    a. Let *result* be ? RegExpExec(*rx*, *S*).
    b. If *result* is **null**, set *done* to **true**.
    c. Else,
        i. Append *result* to the end of *results*.
        ii. If *global* is **false**, set *done* to **true**.
        iii. Else,
            1. Let *matchStr* be ? ToString(? Get(*result*, **"0"**)).
            2. If *matchStr* is the empty String, then
                a. Let *thisIndex* be ? ToLength(? Get(*rx*, **"lastIndex"**)).
                b. Let *nextIndex* be AdvanceStringIndex(*S*, *thisIndex*, *fullUnicode*).
                c. Perform ? Set(*rx*, **"lastIndex"**, *nextIndex*, **true**).
12. Let *accumulatedResult* be the empty String value.
13. Let *nextSourcePosition* be 0.
14. For each *result* in *results*, do
    a. Let *nCaptures* be ? LengthOfArrayLike(*result*).
    b. Set *nCaptures* to max(*nCaptures* - 1, 0).
    c. Let *matched* be ? ToString(? Get(*result*, **"0"**)).
    d. Let *matchLength* be the number of code units in *matched*.
    e. Let *position* be ? ToInteger(? Get(*result*, **"index"**)).
    f. Set *position* to max(min(*position*, *lengthS*), 0).
    g. Let *n* be 1.
    h. Let *captures* be a new empty List.

i. Repeat, while $n \leq nCaptures$
    i. Let *capN* be ? Get(*result*, ! ToString(*n*)).
    ii. If *capN* is not **undefined**, then
        1. Set *capN* to ? ToString(*capN*).
    iii. Append *capN* as the last element of *captures*.
    iv. Set *n* to $n + 1$.
j. Let *namedCaptures* be ? Get(*result*, **"groups"**).
k. If *functionalReplace* is **true**, then
    i. Let *replacerArgs* be « *matched* ».
    ii. Append in list order the elements of *captures* to the end of the List *replacerArgs*.
    iii. Append *position* and *S* to *replacerArgs*.
    iv. If *namedCaptures* is not **undefined**, then
        1. Append *namedCaptures* as the last element of *replacerArgs*.
    v. Let *replValue* be ? Call(*replaceValue*, **undefined**, *replacerArgs*).
    vi. Let *replacement* be ? ToString(*replValue*).
l. Else,
    i. If *namedCaptures* is not **undefined**, then
        1. Set *namedCaptures* to ? ToObject(*namedCaptures*).
    ii. Let *replacement* be ? GetSubstitution(*matched*, *S*, *position*, *captures*, *namedCaptures*, *replaceValue*).
m. If $position \geq nextSourcePosition$, then
    i. NOTE: *position* should not normally move backwards. If it does, it is an indication of an ill-behaving RegExp subclass or use of an access triggered side-effect to change the global flag or other characteristics of *rx*. In such cases, the corresponding substitution is ignored.
    ii. Set *accumulatedResult* to the string-concatenation of the current value of *accumulatedResult*, the substring of *S* consisting of the code units from *nextSourcePosition* (inclusive) up to *position* (exclusive), and *replacement*.
    iii. Set *nextSourcePosition* to $position + matchLength$.

15. If $nextSourcePosition \geq lengthS$, return *accumulatedResult*.
16. Return the string-concatenation of *accumulatedResult* and the substring of *S* consisting of the code units from *nextSourcePosition* (inclusive) up through the final code unit of *S* (inclusive).

The value of the **"name"** property of this function is **"[Symbol.replace]"**.

21.2.5.11 RegExp.prototype [@@search] (*string*)

When the **`@@search`** method is called with argument *string*, the following steps are taken:

1. Let *rx* be the **this** value.
2. If Type(*rx*) is not Object, throw a **TypeError** exception.
3. Let *S* be ? ToString(*string*).
4. Let *previousLastIndex* be ? Get(*rx*, **"lastIndex"**).
5. If SameValue(*previousLastIndex*, 0) is **false**, then
    a. Perform ? Set(*rx*, **"lastIndex"**, 0, **true**).
6. Let *result* be ? RegExpExec(*rx*, *S*).
7. Let *currentLastIndex* be ? Get(*rx*, **"lastIndex"**).
8. If SameValue(*currentLastIndex*, *previousLastIndex*) is **false**, then
    a. Perform ? Set(*rx*, **"lastIndex"**, *previousLastIndex*, **true**).
9. If *result* is **null**, return -1.

10. Return ? Get(*result*, **"index"**).

The value of the **"name"** property of this function is **"[Symbol.search]"**.

> NOTE The **"lastIndex"** and **"global"** properties of this RegExp object are ignored when performing the search. The **"lastIndex"** property is left unchanged.

21.2.5.12 get RegExp.prototype.source

`RegExp.prototype.source` is an accessor property whose set accessor function is **undefined**. Its get accessor function performs the following steps:

1. Let *R* be the **this** value.
2. If Type(*R*) is not Object, throw a **TypeError** exception.
3. If *R* does not have an [[OriginalSource]] internal slot, then
   a. If SameValue(*R*, %RegExp.prototype%) is **true**, return **"(?:)"**.
   b. Otherwise, throw a **TypeError** exception.
4. Assert: *R* has an [[OriginalFlags]] internal slot.
5. Let *src* be *R*.[[OriginalSource]].
6. Let *flags* be *R*.[[OriginalFlags]].
7. Return EscapeRegExpPattern(*src*, *flags*).

21.2.5.13 RegExp.prototype [@@split] (*string*, *limit*)

NOTE 1 Returns an Array object into which substrings of the result of converting *string* to a String have been st
are determined by searching from left to right for matches of the **this** value regular expression; these oc
part of any substring in the returned array, but serve to divide up the String value.

The **this** value may be an empty regular expression or a regular expression that can match an empty St
regular expression does not match the empty substring at the beginning or end of the input String, nor
empty substring at the end of the previous separator match. (For example, if the regular expression ma
String, the String is split up into individual code unit elements; the length of the result array equals the
and each substring contains one code unit.) Only the first match at a given index of the String is consid
backtracking could yield a non-empty-substring match at that index. (For example, **`/a*?/[Symbol.`**
evaluates to the array **`["a", "b"]`**, while **`/a*/[Symbol.split]("ab")`** evaluates to the arra

If the *string* is (or converts to) the empty String, the result depends on whether the regular expression c
String. If it can, the result array contains no elements. Otherwise, the result array contains one element,
String.

If the regular expression contains capturing parentheses, then each time *separator* is matched the results
undefined results) of the capturing parentheses are spliced into the output array. For example,

```
/<(\/)?([^<>]+)>/[Symbol.split]("A<B>bold</B>and<CODE>coded</CODE>")
```

evaluates to the array

```
["A", undefined, "B", "bold", "/", "B", "and", undefined, "CODE", "coded", "
```

If *limit* is not **undefined**, then the output array is truncated so that it contains no more than *limit* elemer

When the **`@@split`** method is called, the following steps are taken:

1. Let *rx* be the **this** value.
2. If Type(*rx*) is not Object, throw a **TypeError** exception.
3. Let *S* be ? ToString(*string*).
4. Let *C* be ? SpeciesConstructor(*rx*, %RegExp%).
5. Let *flags* be ? ToString(? Get(*rx*, **"flags"**)).
6. If *flags* contains **"u"**, let *unicodeMatching* be **true**.
7. Else, let *unicodeMatching* be **false**.
8. If *flags* contains **"y"**, let *newFlags* be *flags*.
9. Else, let *newFlags* be the string-concatenation of *flags* and **"y"**.
10. Let *splitter* be ? Construct(*C*, « *rx*, *newFlags* »).
11. Let *A* be ! ArrayCreate(0).
12. Let *lengthA* be 0.
13. If *limit* is **undefined**, let *lim* be 2^{32} - 1; else let *lim* be ? ToUint32(*limit*).
14. Let *size* be the length of *S*.
15. Let *p* be 0.
16. If *lim* = 0, return *A*.
17. If *size* = 0, then
    a. Let *z* be ? RegExpExec(*splitter*, *S*).
    b. If *z* is not **null**, return *A*.
    c. Perform ! CreateDataPropertyOrThrow(*A*, **"0"**, *S*).

d. Return A.

18. Let q be p.
19. Repeat, while $q < size$
    a. Perform ? Set($splitter$, **"lastIndex"**, q, **true**).
    b. Let z be ? RegExpExec($splitter$, S).
    c. If z is **null**, set q to AdvanceStringIndex(S, q, $unicodeMatching$).
    d. Else,
        i. Let e be ? ToLength(? Get($splitter$, **"lastIndex"**)).
        ii. Set e to min(e, $size$).
        iii. If $e = p$, set q to AdvanceStringIndex(S, q, $unicodeMatching$).
        iv. Else,
            1. Let T be the String value equal to the substring of S consisting of the code units at indices p (inclusive) through q (exclusive).
            2. Perform ! CreateDataPropertyOrThrow(A, ! ToString($lengthA$), T).
            3. Set $lengthA$ to $lengthA$ + 1.
            4. If $lengthA = lim$, return A.
            5. Set p to e.
            6. Let $numberOfCaptures$ be ? LengthOfArrayLike(z).
            7. Set $numberOfCaptures$ to max($numberOfCaptures$ - 1, 0).
            8. Let i be 1.
            9. Repeat, while $i \leq numberOfCaptures$,
                a. Let $nextCapture$ be ? Get(z, ! ToString(i)).
                b. Perform ! CreateDataPropertyOrThrow(A, ! ToString($lengthA$), $nextCapture$).
                c. Set i to i + 1.
                d. Set $lengthA$ to $lengthA$ + 1.
                e. If $lengthA = lim$, return A.
            10. Set q to p.
20. Let T be the String value equal to the substring of S consisting of the code units at indices p (inclusive) through $size$ (exclusive).
21. Perform ! CreateDataPropertyOrThrow(A, ! ToString($lengthA$), T).
22. Return A.

The value of the **"name"** property of this function is **"[Symbol.split]"**.

NOTE 2 The **`@@split`** method ignores the value of the **"global"** and **"sticky"** properties of this RegExp object.

21.2.5.14 get RegExp.prototype.sticky

`RegExp.prototype.sticky` is an accessor property whose set accessor function is **undefined**. Its get accessor function performs the following steps:

1. Let R be the **this** value.
2. If Type(R) is not Object, throw a **TypeError** exception.
3. If R does not have an [[OriginalFlags]] internal slot, then
    a. If SameValue(R, %RegExp.prototype%) is **true**, return **undefined**.
    b. Otherwise, throw a **TypeError** exception.
4. Let $flags$ be R.[[OriginalFlags]].

5. If *flags* contains the code unit 0x0079 (LATIN SMALL LETTER Y), return **true**.
6. Return **false**.

21.2.5.15 RegExp.prototype.test (*S*)

The following steps are taken:

1. Let *R* be the **this** value.
2. If Type(*R*) is not Object, throw a **TypeError** exception.
3. Let *string* be ? ToString(*S*).
4. Let *match* be ? RegExpExec(*R*, *string*).
5. If *match* is not **null**, return **true**; else return **false**.

21.2.5.16 RegExp.prototype.toString ( )

1. Let *R* be the **this** value.
2. If Type(*R*) is not Object, throw a **TypeError** exception.
3. Let *pattern* be ? ToString(? Get(*R*, **"source"**)).
4. Let *flags* be ? ToString(? Get(*R*, **"flags"**)).
5. Let *result* be the string-concatenation of **"/"**, *pattern*, **"/"**, and *flags*.
6. Return *result*.

NOTE The returned String has the form of a *RegularExpressionLiteral* that evaluates to another RegExp object with the same behaviour as this object.

21.2.5.17 get RegExp.prototype.unicode

`RegExp.prototype.unicode` is an accessor property whose set accessor function is **undefined**. Its get accessor function performs the following steps:

1. Let *R* be the **this** value.
2. If Type(*R*) is not Object, throw a **TypeError** exception.
3. If *R* does not have an [[OriginalFlags]] internal slot, then
   a. If SameValue(*R*, %RegExp.prototype%) is **true**, return **undefined**.
   b. Otherwise, throw a **TypeError** exception.
4. Let *flags* be *R*.[[OriginalFlags]].
5. If *flags* contains the code unit 0x0075 (LATIN SMALL LETTER U), return **true**.
6. Return **false**.

21.2.6 Properties of RegExp Instances

RegExp instances are ordinary objects that inherit properties from the RegExp prototype object. RegExp instances have internal slots [[RegExpMatcher]], [[OriginalSource]], and [[OriginalFlags]]. The value of the [[RegExpMatcher]] internal slot is an abstract closure representation of the *Pattern* of the RegExp object.

NOTE Prior to ECMAScript 2015, **`RegExp`** instances were specified as having the own data properties **"source"**, **"global"**, **"ignoreCase"**, and **"multiline"**. Those properties are now specified as accessor properties of **`RegExp.prototype`**.

RegExp instances also have the following property:

21.2.6.1 lastIndex

The value of the **"lastIndex"** property specifies the String index at which to start the next match. It is coerced to an integer when used (see 21.2.5.2.2). This property shall have the attributes { [[Writable]]: **true**, [[Enumerable]]: **false**, [[Configurable]]: **false** }.

21.2.7 RegExp String Iterator Objects

A RegExp String Iterator is an object, that represents a specific iteration over some specific String instance object, matching against some specific RegExp instance object. There is not a named constructor for RegExp String Iterator objects. Instead, RegExp String Iterator objects are created by calling certain methods of RegExp instance objects.

21.2.7.1 The %RegExpStringIteratorPrototype% Object

The *%RegExpStringIteratorPrototype%* object:

- has properties that are inherited by all RegExp String Iterator Objects.
- is an ordinary object.
- has a [[Prototype]] internal slot whose value is the intrinsic object %IteratorPrototype%.
- has the following properties:

21.2.7.1.1 %RegExpStringIteratorPrototype%.next ( )

1. Let *O* be the **this** value.
2. If Type(*O*) is not Object, throw a **TypeError** exception.
3. If *O* does not have all of the internal slots of a RegExp String Iterator Object Instance (see 21.2.7.2), throw a **TypeError** exception.
4. If *O*.[[Done]] is **true**, then
    a. Return ! CreateIterResultObject(**undefined**, **true**).
5. Let *R* be *O*.[[IteratingRegExp]].
6. Let *S* be *O*.[[IteratedString]].
7. Let *global* be *O*.[[Global]].
8. Let *fullUnicode* be *O*.[[Unicode]].
9. Let *match* be ? RegExpExec(*R*, *S*).
10. If *match* is **null**, then
    a. Set *O*.[[Done]] to **true**.
    b. Return ! CreateIterResultObject(**undefined**, **true**).
11. Else,
    a. If *global* is **true**, then
        i. Let *matchStr* be ? ToString(? Get(*match*, **"0"**)).
        ii. If *matchStr* is the empty String, then
            1. Let *thisIndex* be ? ToLength(? Get(*R*, **"lastIndex"**)).

2. Let *nextIndex* be ! AdvanceStringIndex(*S*, *thisIndex*, *fullUnicode*).
3. Perform ? Set(*R*, **"lastIndex"**, *nextIndex*, **true**).

iii. Return ! CreateIterResultObject(*match*, **false**).

b. Else,

i. Set *O*.[[Done]] to **true**.

ii. Return ! CreateIterResultObject(*match*, **false**).

21.2.7.1.2 %RegExpStringIteratorPrototype% [@@toStringTag]

The initial value of the @@toStringTag property is the String value **"RegExp String Iterator"**.

This property has the attributes { [[Writable]]: **false**, [[Enumerable]]: **false**, [[Configurable]]: **true** }.

21.2.7.2 Properties of RegExp String Iterator Instances

RegExp String Iterator instances are ordinary objects that inherit properties from the %RegExpStringIteratorPrototype% intrinsic object. RegExp String Iterator instances are initially created with the internal slots listed in Table 59.

Table 59: Internal Slots of RegExp String Iterator Instances

Internal Slot	Description
[[IteratingRegExp]]	The regular expression used for iteration. IsRegExp([[IteratingRegExp]]) is initially **true**.
[[IteratedString]]	The String value being iterated upon.
[[Global]]	A Boolean value to indicate whether the [[IteratingRegExp]] is global or not.
[[Unicode]]	A Boolean value to indicate whether the [[IteratingRegExp]] is in Unicode mode or not.
[[Done]]	A Boolean value to indicate whether the iteration is complete or not.

22 Indexed Collections

22.1 Array Objects

Array objects are exotic objects that give special treatment to a certain class of property names. See 9.4.2 for a definition of this special treatment.

22.1.1 The Array Constructor

The Array constructor:

- is the intrinsic object *%Array%*.
- is the initial value of the **"Array"** property of the global object.
- creates and initializes a new Array exotic object when called as a constructor.
- also creates and initializes a new Array object when called as a function rather than as a constructor. Thus the function call **`Array(…)`** is equivalent to the object creation expression **`new Array(…)`** with the same

arguments.

- is a single function whose behaviour is overloaded based upon the number and types of its arguments.
- is designed to be subclassable. It may be used as the value of an **`extends`** clause of a class definition. Subclass constructors that intend to inherit the exotic **`Array`** behaviour must include a **`super`** call to the **`Array`** constructor to initialize subclass instances that are Array exotic objects. However, most of the **`Array.prototype`** methods are generic methods that are not dependent upon their **this** value being an Array exotic object.
- has a **"length"** property whose value is 1.

22.1.1.1 Array ( )

This description applies if and only if the Array constructor is called with no arguments.

1. Let *numberOfArgs* be the number of arguments passed to this function call.
2. Assert: *numberOfArgs* = 0.
3. If NewTarget is **undefined**, let *newTarget* be the active function object; else let *newTarget* be NewTarget.
4. Let *proto* be ? GetPrototypeFromConstructor(*newTarget*, **"%Array.prototype%"**).
5. Return ! ArrayCreate(0, *proto*).

22.1.1.2 Array (*len*)

This description applies if and only if the Array constructor is called with exactly one argument.

1. Let *numberOfArgs* be the number of arguments passed to this function call.
2. Assert: *numberOfArgs* = 1.
3. If NewTarget is **undefined**, let *newTarget* be the active function object; else let *newTarget* be NewTarget.
4. Let *proto* be ? GetPrototypeFromConstructor(*newTarget*, **"%Array.prototype%"**).
5. Let *array* be ! ArrayCreate(0, *proto*).
6. If Type(*len*) is not Number, then
   a. Perform ! CreateDataPropertyOrThrow(*array*, **"0"**, *len*).
   b. Let *intLen* be 1.
7. Else,
   a. Let *intLen* be ToUint32(*len*).
   b. If *intLen* ≠ *len*, throw a **RangeError** exception.
8. Perform ! Set(*array*, **"length"**, *intLen*, **true**).
9. Return *array*.

22.1.1.3 Array (...*items*)

This description applies if and only if the Array constructor is called with at least two arguments.

When the **`Array`** function is called, the following steps are taken:

1. Let *numberOfArgs* be the number of arguments passed to this function call.
2. Assert: *numberOfArgs* ≥ 2.
3. If NewTarget is **undefined**, let *newTarget* be the active function object; else let *newTarget* be NewTarget.
4. Let *proto* be ? GetPrototypeFromConstructor(*newTarget*, **"%Array.prototype%"**).
5. Let *array* be ? ArrayCreate(*numberOfArgs*, *proto*).
6. Let *k* be 0.

7. Let *items* be a zero-origined List containing the argument items in order.
8. Repeat, while $k < numberOfArgs$
    a. Let *Pk* be ! ToString(*k*).
    b. Let *itemK* be *items*[*k*].
    c. Perform ! CreateDataPropertyOrThrow(*array*, *Pk*, *itemK*).
    d. Set *k* to $k + 1$.
9. Assert: The value of *array*'s **"length"** property is *numberOfArgs*.
10. Return *array*.

22.1.2 Properties of the Array Constructor

The Array constructor:

- has a [[Prototype]] internal slot whose value is %Function.prototype%.
- has the following properties:

22.1.2.1 Array.from (*items* [, *mapfn* [, *thisArg*]])

When the `from` method is called with argument *items* and optional arguments *mapfn* and *thisArg*, the following steps are taken:

1. Let *C* be the **this** value.
2. If *mapfn* is **undefined**, let *mapping* be **false**.
3. Else,
    a. If IsCallable(*mapfn*) is **false**, throw a **TypeError** exception.
    b. Let *mapping* be **true**.
4. Let *usingIterator* be ? GetMethod(*items*, @@iterator).
5. If *usingIterator* is not **undefined**, then
    a. If IsConstructor(*C*) is **true**, then
        i. Let *A* be ? Construct(*C*).
    b. Else,
        i. Let *A* be ! ArrayCreate(0).
    c. Let *iteratorRecord* be ? GetIterator(*items*, sync, *usingIterator*).
    d. Let *k* be 0.
    e. Repeat,
        i. If $k \geq 2^{53} - 1$, then
            1. Let *error* be ThrowCompletion(a newly created **TypeError** object).
            2. Return ? IteratorClose(*iteratorRecord*, *error*).
        ii. Let *Pk* be ! ToString(*k*).
        iii. Let *next* be ? IteratorStep(*iteratorRecord*).
        iv. If *next* is **false**, then
            1. Perform ? Set(*A*, **"length"**, *k*, **true**).
            2. Return *A*.
        v. Let *nextValue* be ? IteratorValue(*next*).
        vi. If *mapping* is **true**, then
            1. Let *mappedValue* be Call(*mapfn*, *thisArg*, « *nextValue*, *k* »).
            2. If *mappedValue* is an abrupt completion, return ? IteratorClose(*iteratorRecord*, *mappedValue*).
            3. Set *mappedValue* to *mappedValue*.[[Value]].

vii. Else, let *mappedValue* be *nextValue*.
viii. Let *defineStatus* be CreateDataPropertyOrThrow(*A*, *Pk*, *mappedValue*).
ix. If *defineStatus* is an abrupt completion, return ? IteratorClose(*iteratorRecord*, *defineStatus*).
x. Set *k* to *k* + 1.

6. NOTE: *items* is not an Iterable so assume it is an array-like object.
7. Let *arrayLike* be ! ToObject(*items*).
8. Let *len* be ? LengthOfArrayLike(*arrayLike*).
9. If IsConstructor(*C*) is **true**, then
   a. Let *A* be ? Construct(*C*, « *len* »).
10. Else,
   a. Let *A* be ? ArrayCreate(*len*).
11. Let *k* be 0.
12. Repeat, while *k* < *len*
   a. Let *Pk* be ! ToString(*k*).
   b. Let *kValue* be ? Get(*arrayLike*, *Pk*).
   c. If *mapping* is **true**, then
      i. Let *mappedValue* be ? Call(*mapfn*, *thisArg*, « *kValue*, *k* »).
   d. Else, let *mappedValue* be *kValue*.
   e. Perform ? CreateDataPropertyOrThrow(*A*, *Pk*, *mappedValue*).
   f. Set *k* to *k* + 1.
13. Perform ? Set(*A*, **"length"**, *len*, **true**).
14. Return *A*.

NOTE The **`from`** function is an intentionally generic factory method; it does not require that its **this** value be the Array constructor. Therefore it can be transferred to or inherited by any other constructors that may be called with a single numeric argument.

22.1.2.2 Array.isArray (*arg*)

The **`isArray`** function takes one argument *arg*, and performs the following steps:

1. Return ? IsArray(*arg*).

22.1.2.3 Array.of (...*items*)

When the **`of`** method is called with any number of arguments, the following steps are taken:

1. Let *len* be the actual number of arguments passed to this function.
2. Let *items* be the List of arguments passed to this function.
3. Let *C* be the **this** value.
4. If IsConstructor(*C*) is **true**, then
   a. Let *A* be ? Construct(*C*, « *len* »).
5. Else,
   a. Let *A* be ? ArrayCreate(*len*).
6. Let *k* be 0.
7. Repeat, while *k* < *len*
   a. Let *kValue* be *items*[*k*].
   b. Let *Pk* be ! ToString(*k*).

c. Perform ? CreateDataPropertyOrThrow(*A*, *Pk*, *kValue*).
d. Set *k* to *k* + 1.

8. Perform ? Set(*A*, **"length"**, *len*, **true**).
9. Return *A*.

NOTE 1 The *items* argument is assumed to be a well-formed rest argument value.

NOTE 2 The `of` function is an intentionally generic factory method; it does not require that its **this** value be the Array constructor. Therefore it can be transferred to or inherited by other constructors that may be called with a single numeric argument.

22.1.2.4 Array.prototype

The value of `Array.prototype` is %Array.prototype%, the intrinsic Array prototype object.

This property has the attributes { [[Writable]]: **false**, [[Enumerable]]: **false**, [[Configurable]]: **false** }.

22.1.2.5 get Array [@@species]

`Array[@@species]` is an accessor property whose set accessor function is **undefined**. Its get accessor function performs the following steps:

1. Return the **this** value.

The value of the **"name"** property of this function is **"get [Symbol.species]"**.

NOTE Array prototype methods normally use their **this** object's constructor to create a derived object. However, a subclass constructor may over-ride that default behaviour by redefining its @@species property.

22.1.3 Properties of the Array Prototype Object

The Array prototype object:

- is the intrinsic object *%ArrayPrototype%*.
- is an Array exotic object and has the internal methods specified for such objects.
- has a **"length"** property whose initial value is 0 and whose attributes are { [[Writable]]: **true**, [[Enumerable]]: **false**, [[Configurable]]: **false** }.
- has a [[Prototype]] internal slot whose value is %Object.prototype%.

NOTE The Array prototype object is specified to be an Array exotic object to ensure compatibility with ECMAScript code that was created prior to the ECMAScript 2015 specification.

22.1.3.1 Array.prototype.concat (...*arguments*)

When the `concat` method is called with zero or more arguments, it returns an array containing the array elements of

the object followed by the array elements of each argument in order.

The following steps are taken:

1. Let *O* be ? ToObject(**this** value).
2. Let *A* be ? ArraySpeciesCreate(*O*, 0).
3. Let *n* be 0.
4. Let *items* be a List whose first element is *O* and whose subsequent elements are, in left to right order, the arguments that were passed to this function invocation.
5. Repeat, while *items* is not empty
    a. Remove the first element from *items* and let *E* be the value of the element.
    b. Let *spreadable* be ? IsConcatSpreadable(*E*).
    c. If *spreadable* is **true**, then
        i. Let *k* be 0.
        ii. Let *len* be ? LengthOfArrayLike(*E*).
        iii. If $n + len > 2^{53} - 1$, throw a **TypeError** exception.
        iv. Repeat, while $k < len$
            1. Let *P* be ! ToString(*k*).
            2. Let *exists* be ? HasProperty(*E*, *P*).
            3. If *exists* is **true**, then
                a. Let *subElement* be ? Get(*E*, *P*).
                b. Perform ? CreateDataPropertyOrThrow(*A*, ! ToString(*n*), *subElement*).
            4. Set *n* to $n + 1$.
            5. Set *k* to $k + 1$.
    d. Else,
        i. NOTE: *E* is added as a single item rather than spread.
        ii. If $n \geq 2^{53} - 1$, throw a **TypeError** exception.
        iii. Perform ? CreateDataPropertyOrThrow(*A*, ! ToString(*n*), *E*).
        iv. Set *n* to $n + 1$.
6. Perform ? Set(*A*, **"length"**, *n*, **true**).
7. Return *A*.

The **"length"** property of the `concat` method is 1.

NOTE 1 The explicit setting of the **"length"** property in step 6 is necessary to ensure that its value is correct in situations where the trailing elements of the result Array are not present.

NOTE 2 The `concat` function is intentionally generic; it does not require that its **this** value be an Array object. Therefore it can be transferred to other kinds of objects for use as a method.

22.1.3.1.1 Runtime Semantics: IsConcatSpreadable (*O*)

The abstract operation IsConcatSpreadable with argument *O* performs the following steps:

1. If Type(*O*) is not Object, return **false**.
2. Let *spreadable* be ? Get(*O*, @@isConcatSpreadable).
3. If *spreadable* is not **undefined**, return ! ToBoolean(*spreadable*).
4. Return ? IsArray(*O*).

22.1.3.2 Array.prototype.constructor

The initial value of **`Array.prototype.constructor`** is %Array%.

22.1.3.3 Array.prototype.copyWithin (*target*, *start* [, *end*])

The **`copyWithin`** method takes up to three arguments *target*, *start* and *end*.

NOTE 1 The *end* argument is optional with the length of the **this** object as its default value. If *target* is negative, it is treated as *length* + *target* where *length* is the length of the array. If *start* is negative, it is treated as *length* + *start*. If *end* is negative, it is treated as *length* + *end*.

The following steps are taken:

1. Let *O* be ? ToObject(**this** value).
2. Let *len* be ? LengthOfArrayLike(*O*).
3. Let *relativeTarget* be ? ToInteger(*target*).
4. If *relativeTarget* < 0, let *to* be max((*len* + *relativeTarget*), 0); else let *to* be min(*relativeTarget*, *len*).
5. Let *relativeStart* be ? ToInteger(*start*).
6. If *relativeStart* < 0, let *from* be max((*len* + *relativeStart*), 0); else let *from* be min(*relativeStart*, *len*).
7. If *end* is **undefined**, let *relativeEnd* be *len*; else let *relativeEnd* be ? ToInteger(*end*).
8. If *relativeEnd* < 0, let *final* be max((*len* + *relativeEnd*), 0); else let *final* be min(*relativeEnd*, *len*).
9. Let *count* be min(*final* - *from*, *len* - *to*).
10. If *from* < *to* and *to* < *from* + *count*, then
    a. Let *direction* be -1.
    b. Set *from* to *from* + *count* - 1.
    c. Set *to* to *to* + *count* - 1.
11. Else,
    a. Let *direction* be 1.
12. Repeat, while *count* > 0
    a. Let *fromKey* be ! ToString(*from*).
    b. Let *toKey* be ! ToString(*to*).
    c. Let *fromPresent* be ? HasProperty(*O*, *fromKey*).
    d. If *fromPresent* is **true**, then
        i. Let *fromVal* be ? Get(*O*, *fromKey*).
        ii. Perform ? Set(*O*, *toKey*, *fromVal*, **true**).
    e. Else,
        i. Assert: *fromPresent* is **false**.
        ii. Perform ? DeletePropertyOrThrow(*O*, *toKey*).
    f. Set *from* to *from* + *direction*.
    g. Set *to* to *to* + *direction*.
    h. Set *count* to *count* - 1.
13. Return *O*.

NOTE 2 The **`copyWithin`** function is intentionally generic; it does not require that its **this** value be an Array object. Therefore it can be transferred to other kinds of objects for use as a method.

22.1.3.4 Array.prototype.entries ( )

The following steps are taken:

1. Let *O* be ? ToObject(**this** value).
2. Return CreateArrayIterator(*O*, key+value).

This function is the *%ArrayProto_entries%* intrinsic object.

22.1.3.5 Array.prototype.every (*callbackfn* [, *thisArg*])

NOTE 1 *callbackfn* should be a function that accepts three arguments and returns a value that is coercible to the Boolean value **true** or **false**. `every` calls *callbackfn* once for each element present in the array, in ascending order, until it finds one where *callbackfn* returns **false**. If such an element is found, `every` immediately returns **false**. Otherwise, if *callbackfn* returned **true** for all elements, `every` will return **true**. *callbackfn* is called only for elements of the array which actually exist; it is not called for missing elements of the array.

If a *thisArg* parameter is provided, it will be used as the **this** value for each invocation of *callbackfn*. If it is not provided, **undefined** is used instead.

callbackfn is called with three arguments: the value of the element, the index of the element, and the object being traversed.

`every` does not directly mutate the object on which it is called but the object may be mutated by the calls to *callbackfn*.

The range of elements processed by `every` is set before the first call to *callbackfn*. Elements which are appended to the array after the call to `every` begins will not be visited by *callbackfn*. If existing elements of the array are changed, their value as passed to *callbackfn* will be the value at the time `every` visits them; elements that are deleted after the call to `every` begins and before being visited are not visited. `every` acts like the "for all" quantifier in mathematics. In particular, for an empty array, it returns **true**.

When the `every` method is called with one or two arguments, the following steps are taken:

1. Let *O* be ? ToObject(**this** value).
2. Let *len* be ? LengthOfArrayLike(*O*).
3. If IsCallable(*callbackfn*) is **false**, throw a **TypeError** exception.
4. Let *k* be 0.
5. Repeat, while *k* < *len*
    a. Let *Pk* be ! ToString(*k*).
    b. Let *kPresent* be ? HasProperty(*O*, *Pk*).
    c. If *kPresent* is **true**, then
        i. Let *kValue* be ? Get(*O*, *Pk*).
        ii. Let *testResult* be ! ToBoolean(? Call(*callbackfn*, *thisArg*, « *kValue*, *k*, *O* »)).
        iii. If *testResult* is **false**, return **false**.
    d. Set *k* to *k* + 1.
6. Return **true**.

NOTE 2 The **every** function is intentionally generic; it does not require that its **this** value be an Array object. Therefore it can be transferred to other kinds of objects for use as a method.

22.1.3.6 Array.prototype.fill (*value* [, *start* [, *end*]])

The **fill** method takes up to three arguments *value*, *start* and *end*.

NOTE 1 The *start* and *end* arguments are optional with default values of 0 and the length of the **this** object. If *start* is negative, it is treated as *length* + *start* where *length* is the length of the array. If *end* is negative, it is treated as *length* + *end*.

The following steps are taken:

1. Let *O* be ? ToObject(**this** value).
2. Let *len* be ? LengthOfArrayLike(*O*).
3. Let *relativeStart* be ? ToInteger(*start*).
4. If *relativeStart* < 0, let *k* be max((*len* + *relativeStart*), 0); else let *k* be min(*relativeStart*, *len*).
5. If *end* is **undefined**, let *relativeEnd* be *len*; else let *relativeEnd* be ? ToInteger(*end*).
6. If *relativeEnd* < 0, let *final* be max((*len* + *relativeEnd*), 0); else let *final* be min(*relativeEnd*, *len*).
7. Repeat, while *k* < *final*
    a. Let *Pk* be ! ToString(*k*).
    b. Perform ? Set(*O*, *Pk*, *value*, **true**).
    c. Set *k* to *k* + 1.
8. Return *O*.

NOTE 2 The **fill** function is intentionally generic; it does not require that its **this** value be an Array object. Therefore it can be transferred to other kinds of objects for use as a method.

22.1.3.7 Array.prototype.filter (*callbackfn* [, *thisArg*])

NOTE 1 *callbackfn* should be a function that accepts three arguments and returns a value that is coercible to the Boolean value **true** or **false**. `filter` calls *callbackfn* once for each element in the array, in ascending order, and constructs a new array of all the values for which *callbackfn* returns **true**. *callbackfn* is called only for elements of the array which actually exist; it is not called for missing elements of the array.

If a *thisArg* parameter is provided, it will be used as the **this** value for each invocation of *callbackfn*. If it is not provided, **undefined** is used instead.

callbackfn is called with three arguments: the value of the element, the index of the element, and the object being traversed.

`filter` does not directly mutate the object on which it is called but the object may be mutated by the calls to *callbackfn*.

The range of elements processed by `filter` is set before the first call to *callbackfn*. Elements which are appended to the array after the call to `filter` begins will not be visited by *callbackfn*. If existing elements of the array are changed their value as passed to *callbackfn* will be the value at the time `filter` visits them; elements that are deleted after the call to `filter` begins and before being visited are not visited.

When the `filter` method is called with one or two arguments, the following steps are taken:

1. Let *O* be ? ToObject(**this** value).
2. Let *len* be ? LengthOfArrayLike(*O*).
3. If IsCallable(*callbackfn*) is **false**, throw a **TypeError** exception.
4. Let *A* be ? ArraySpeciesCreate(*O*, 0).
5. Let *k* be 0.
6. Let *to* be 0.
7. Repeat, while *k* < *len*
   a. Let *Pk* be ! ToString(*k*).
   b. Let *kPresent* be ? HasProperty(*O*, *Pk*).
   c. If *kPresent* is **true**, then
      i. Let *kValue* be ? Get(*O*, *Pk*).
      ii. Let *selected* be ! ToBoolean(? Call(*callbackfn*, *thisArg*, « *kValue*, *k*, *O* »)).
      iii. If *selected* is **true**, then
         1. Perform ? CreateDataPropertyOrThrow(*A*, ! ToString(*to*), *kValue*).
         2. Set *to* to *to* + 1.
   d. Set *k* to *k* + 1.
8. Return *A*.

NOTE 2 The `filter` function is intentionally generic; it does not require that its **this** value be an Array object. Therefore it can be transferred to other kinds of objects for use as a method.

22.1.3.8 Array.prototype.find (*predicate* [, *thisArg*])

The `find` method is called with one or two arguments, *predicate* and *thisArg*.

NOTE 1 *predicate* should be a function that accepts three arguments and returns a value that is coercible to a Boolean value. **`find`** calls *predicate* once for each element of the array, in ascending order, until it finds one where *predicate* returns **true**. If such an element is found, **`find`** immediately returns that element value. Otherwise, **`find`** returns **undefined**.

If a *thisArg* parameter is provided, it will be used as the **this** value for each invocation of *predicate*. If it is not provided, **undefined** is used instead.

predicate is called with three arguments: the value of the element, the index of the element, and the object being traversed.

`find` does not directly mutate the object on which it is called but the object may be mutated by the calls to *predicate*.

The range of elements processed by **`find`** is set before the first call to *predicate*. Elements that are appended to the array after the call to **`find`** begins will not be visited by *predicate*. If existing elements of the array are changed, their value as passed to *predicate* will be the value at the time that **`find`** visits them.

When the **`find`** method is called, the following steps are taken:

1. Let *O* be ? ToObject(**this** value).
2. Let *len* be ? LengthOfArrayLike(*O*).
3. If IsCallable(*predicate*) is **false**, throw a **TypeError** exception.
4. Let *k* be 0.
5. Repeat, while *k* < *len*
    a. Let *Pk* be ! ToString(*k*).
    b. Let *kValue* be ? Get(*O*, *Pk*).
    c. Let *testResult* be ! ToBoolean(? Call(*predicate*, *thisArg*, « *kValue*, *k*, *O* »)).
    d. If *testResult* is **true**, return *kValue*.
    e. Set *k* to *k* + 1.
6. Return **undefined**.

NOTE 2 The **`find`** function is intentionally generic; it does not require that its **this** value be an Array object. Therefore it can be transferred to other kinds of objects for use as a method.

22.1.3.9 Array.prototype.findIndex (*predicate* [, *thisArg*])

NOTE 1 *predicate* should be a function that accepts three arguments and returns a value that is coercible to the Boolean value **true** or **false**. **`findIndex`** calls *predicate* once for each element of the array, in ascending order, until it finds one where *predicate* returns **true**. If such an element is found, **`findIndex`** immediately returns the index of that element value. Otherwise, **`findIndex`** returns -1.

If a *thisArg* parameter is provided, it will be used as the **this** value for each invocation of *predicate*. If it is not provided, **undefined** is used instead.

predicate is called with three arguments: the value of the element, the index of the element, and the object being traversed.

`findIndex` does not directly mutate the object on which it is called but the object may be mutated by the calls to *predicate*.

The range of elements processed by **`findIndex`** is set before the first call to *predicate*. Elements that are appended to the array after the call to **`findIndex`** begins will not be visited by *predicate*. If existing elements of the array are changed, their value as passed to *predicate* will be the value at the time that **`findIndex`** visits them.

When the **`findIndex`** method is called with one or two arguments, the following steps are taken:

1. Let *O* be ? ToObject(**this** value).
2. Let *len* be ? LengthOfArrayLike(*O*).
3. If IsCallable(*predicate*) is **false**, throw a **TypeError** exception.
4. Let *k* be 0.
5. Repeat, while *k* < *len*
    a. Let *Pk* be ! ToString(*k*).
    b. Let *kValue* be ? Get(*O*, *Pk*).
    c. Let *testResult* be ! ToBoolean(? Call(*predicate*, *thisArg*, « *kValue*, *k*, *O* »)).
    d. If *testResult* is **true**, return *k*.
    e. Set *k* to *k* + 1.
6. Return -1.

NOTE 2 The **`findIndex`** function is intentionally generic; it does not require that its **this** value be an Array object. Therefore it can be transferred to other kinds of objects for use as a method.

22.1.3.10 Array.prototype.flat ([*depth*])

When the **`flat`** method is called with zero or one arguments, the following steps are taken:

1. Let *O* be ? ToObject(**this** value).
2. Let *sourceLen* be ? LengthOfArrayLike(*O*).
3. Let *depthNum* be 1.
4. If *depth* is not **undefined**, then
    a. Set *depthNum* to ? ToInteger(*depth*).
5. Let *A* be ? ArraySpeciesCreate(*O*, 0).
6. Perform ? FlattenIntoArray(*A*, *O*, *sourceLen*, 0, *depthNum*).

7. Return *A*.

22.1.3.10.1 FlattenIntoArray (*target*, *source*, *sourceLen*, *start*, *depth* [, *mapperFunction*, *thisArg*])

1. Assert: Type(*target*) is Object.
2. Assert: Type(*source*) is Object.
3. Assert: ! IsNonNegativeInteger(*sourceLen*) is **true**.
4. Assert: ! IsNonNegativeInteger(*start*) is **true**.
5. Assert: ! IsInteger(*depth*) is **true**, or *depth* is either +∞ or -∞.
6. Assert: If *mapperFunction* is present, then ! IsCallable(*mapperFunction*) is **true**, *thisArg* is present, and *depth* is **1**.
7. Let *targetIndex* be *start*.
8. Let *sourceIndex* be 0.
9. Repeat, while *sourceIndex* < *sourceLen*
    a. Let *P* be ! ToString(*sourceIndex*).
    b. Let *exists* be ? HasProperty(*source*, *P*).
    c. If *exists* is **true**, then
        i. Let *element* be ? Get(*source*, *P*).
        ii. If *mapperFunction* is present, then
            1. Set *element* to ? Call(*mapperFunction*, *thisArg*, « *element*, *sourceIndex*, *source* »).
        iii. Let *shouldFlatten* be **false**.
        iv. If *depth* > 0, then
            1. Set *shouldFlatten* to ? IsArray(*element*).
        v. If *shouldFlatten* is **true**, then
            1. Let *elementLen* be ? LengthOfArrayLike(*element*).
            2. Set *targetIndex* to ? FlattenIntoArray(*target*, *element*, *elementLen*, *targetIndex*, *depth* - 1).
        vi. Else,
            1. If *targetIndex* ≥ 2^{53} - 1, throw a **TypeError** exception.
            2. Perform ? CreateDataPropertyOrThrow(*target*, ! ToString(*targetIndex*), *element*).
            3. Set *targetIndex* to *targetIndex* + 1.
    d. Set *sourceIndex* to *sourceIndex* + 1.
10. Return *targetIndex*.

22.1.3.11 Array.prototype.flatMap (*mapperFunction* [, *thisArg*])

When the **`flatMap`** method is called with one or two arguments, the following steps are taken:

1. Let *O* be ? ToObject(**this** value).
2. Let *sourceLen* be ? LengthOfArrayLike(*O*).
3. If ! IsCallable(*mapperFunction*) is **false**, throw a **TypeError** exception.
4. Let *A* be ? ArraySpeciesCreate(*O*, 0).
5. Perform ? FlattenIntoArray(*A*, *O*, *sourceLen*, 0, 1, *mapperFunction*, *thisArg*).
6. Return *A*.

22.1.3.12 Array.prototype.forEach (*callbackfn* [, *thisArg*])

NOTE 1 *callbackfn* should be a function that accepts three arguments. **`forEach`** calls *callbackfn* once for each element present in the array, in ascending order. *callbackfn* is called only for elements of the array which actually exist; it is not called for missing elements of the array.

If a *thisArg* parameter is provided, it will be used as the **this** value for each invocation of *callbackfn*. If it is not provided, **undefined** is used instead.

callbackfn is called with three arguments: the value of the element, the index of the element, and the object being traversed.

`forEach` does not directly mutate the object on which it is called but the object may be mutated by the calls to *callbackfn*.

When the **`forEach`** method is called with one or two arguments, the following steps are taken:

1. Let *O* be ? ToObject(**this** value).
2. Let *len* be ? LengthOfArrayLike(*O*).
3. If IsCallable(*callbackfn*) is **false**, throw a **TypeError** exception.
4. Let *k* be 0.
5. Repeat, while *k* < *len*
    a. Let *Pk* be ! ToString(*k*).
    b. Let *kPresent* be ? HasProperty(*O*, *Pk*).
    c. If *kPresent* is **true**, then
        i. Let *kValue* be ? Get(*O*, *Pk*).
        ii. Perform ? Call(*callbackfn*, *thisArg*, « *kValue*, *k*, *O* »).
    d. Set *k* to *k* + 1.
6. Return **undefined**.

This function is the *%ArrayProto_forEach%* intrinsic object.

NOTE 2 The **`forEach`** function is intentionally generic; it does not require that its **this** value be an Array object. Therefore it can be transferred to other kinds of objects for use as a method.

22.1.3.13 Array.prototype.includes (*searchElement* [, *fromIndex*])

NOTE 1 **`includes`** compares *searchElement* to the elements of the array, in ascending order, using the SameValueZero algorithm, and if found at any position, returns **true**; otherwise, **false** is returned.

The optional second argument *fromIndex* defaults to 0 (i.e. the whole array is searched). If it is greater than or equal to the length of the array, **false** is returned, i.e. the array will not be searched. If it is negative, it is used as the offset from the end of the array to compute *fromIndex*. If the computed index is less than 0, the whole array will be searched.

When the **`includes`** method is called, the following steps are taken:

1. Let *O* be ? ToObject(**this** value).
2. Let *len* be ? LengthOfArrayLike(*O*).
3. If *len* is 0, return **false**.

4. Let *n* be ? ToInteger(*fromIndex*).
5. Assert: If *fromIndex* is **undefined**, then *n* is 0.
6. If $n \geq 0$, then
    a. Let *k* be *n*.
7. Else,
    a. Let *k* be *len* + *n*.
    b. If $k < 0$, set *k* to 0.
8. Repeat, while $k < len$
    a. Let *elementK* be the result of ? Get(*O*, ! ToString(*k*)).
    b. If SameValueZero(*searchElement*, *elementK*) is **true**, return **true**.
    c. Set *k* to *k* + 1.
9. Return **false**.

NOTE 2 The `includes` function is intentionally generic; it does not require that its **this** value be an Array object. Therefore it can be transferred to other kinds of objects for use as a method.

NOTE 3 The `includes` method intentionally differs from the similar `indexOf` method in two ways. First, it uses the SameValueZero algorithm, instead of Strict Equality Comparison, allowing it to detect **NaN** array elements. Second, it does not skip missing array elements, instead treating them as **undefined**.

22.1.3.14 Array.prototype.indexOf (*searchElement* [, *fromIndex*])

NOTE 1 `indexOf` compares *searchElement* to the elements of the array, in ascending order, using the Strict Equality Comparison algorithm, and if found at one or more indices, returns the smallest such index; otherwise, -1 is returned.

The optional second argument *fromIndex* defaults to 0 (i.e. the whole array is searched). If it is greater than or equal to the length of the array, -1 is returned, i.e. the array will not be searched. If it is negative, it is used as the offset from the end of the array to compute *fromIndex*. If the computed index is less than 0, the whole array will be searched.

When the `indexOf` method is called with one or two arguments, the following steps are taken:

1. Let *O* be ? ToObject(**this** value).
2. Let *len* be ? LengthOfArrayLike(*O*).
3. If *len* is 0, return -1.
4. Let *n* be ? ToInteger(*fromIndex*).
5. Assert: If *fromIndex* is **undefined**, then *n* is 0.
6. If $n \geq len$, return -1.
7. If $n \geq 0$, then
    a. Let *k* be *n*.
8. Else,
    a. Let *k* be *len* + *n*.
    b. If $k < 0$, set *k* to 0.
9. Repeat, while $k < len$

a. Let *kPresent* be ? HasProperty(*O*, ! ToString(*k*)).
b. If *kPresent* is **true**, then
    i. Let *elementK* be ? Get(*O*, ! ToString(*k*)).
    ii. Let *same* be the result of performing Strict Equality Comparison *searchElement* === *elementK*.
    iii. If *same* is **true**, return *k*.
c. Set *k* to *k* + 1.

10. Return -1.

NOTE 2 The `indexOf` function is intentionally generic; it does not require that its **this** value be an Array object. Therefore it can be transferred to other kinds of objects for use as a method.

22.1.3.15 Array.prototype.join (*separator*)

NOTE 1 The elements of the array are converted to Strings, and these Strings are then concatenated, separated by occurrences of the *separator*. If no separator is provided, a single comma is used as the separator.

The `join` method takes one argument, *separator*, and performs the following steps:

1. Let *O* be ? ToObject(**this** value).
2. Let *len* be ? LengthOfArrayLike(*O*).
3. If *separator* is **undefined**, let *sep* be the single-element String ",".
4. Else, let *sep* be ? ToString(*separator*).
5. Let *R* be the empty String.
6. Let *k* be 0.
7. Repeat, while *k* < *len*
    a. If *k* > 0, set *R* to the string-concatenation of *R* and *sep*.
    b. Let *element* be ? Get(*O*, ! ToString(*k*)).
    c. If *element* is **undefined** or **null**, let *next* be the empty String; otherwise, let *next* be ? ToString(*element*).
    d. Set *R* to the string-concatenation of *R* and *next*.
    e. Set *k* to *k* + 1.
8. Return *R*.

NOTE 2 The `join` function is intentionally generic; it does not require that its **this** value be an Array object. Therefore, it can be transferred to other kinds of objects for use as a method.

22.1.3.16 Array.prototype.keys ( )

The following steps are taken:

1. Let *O* be ? ToObject(**this** value).
2. Return CreateArrayIterator(*O*, key).

This function is the *%ArrayProto_keys%* intrinsic object.

22.1.3.17 Array.prototype.lastIndexOf (*searchElement* [, *fromIndex*])

NOTE 1 **`lastIndexOf`** compares *searchElement* to the elements of the array in descending order using the Strict Equality Comparison algorithm, and if found at one or more indices, returns the largest such index; otherwise, -1 is returned.

The optional second argument *fromIndex* defaults to the array's length minus one (i.e. the whole array is searched). If it is greater than or equal to the length of the array, the whole array will be searched. If it is negative, it is used as the offset from the end of the array to compute *fromIndex*. If the computed index is less than 0, -1 is returned.

When the **`lastIndexOf`** method is called with one or two arguments, the following steps are taken:

1. Let *O* be ? ToObject(**this** value).
2. Let *len* be ? LengthOfArrayLike(*O*).
3. If *len* is 0, return -1.
4. If *fromIndex* is present, let *n* be ? ToInteger(*fromIndex*); else let *n* be *len* - 1.
5. If *n* ≥ 0, then
    a. Let *k* be min(*n*, *len* - 1).
6. Else,
    a. Let *k* be *len* + *n*.
7. Repeat, while *k* ≥ 0
    a. Let *kPresent* be ? HasProperty(*O*, ! ToString(*k*)).
    b. If *kPresent* is **true**, then
        i. Let *elementK* be ? Get(*O*, ! ToString(*k*)).
        ii. Let *same* be the result of performing Strict Equality Comparison *searchElement* === *elementK*.
        iii. If *same* is **true**, return *k*.
    c. Set *k* to *k* - 1.
8. Return -1.

NOTE 2 The **`lastIndexOf`** function is intentionally generic; it does not require that its **this** value be an Array object. Therefore it can be transferred to other kinds of objects for use as a method.

22.1.3.18 Array.prototype.map (*callbackfn* [, *thisArg*])

NOTE 1 *callbackfn* should be a function that accepts three arguments. **map** calls *callbackfn* once for each element in the array, in ascending order, and constructs a new Array from the results. *callbackfn* is called only for elements of the array which actually exist; it is not called for missing elements of the array.

If a *thisArg* parameter is provided, it will be used as the **this** value for each invocation of *callbackfn*. If it is not provided, **undefined** is used instead.

callbackfn is called with three arguments: the value of the element, the index of the element, and the object being traversed.

map does not directly mutate the object on which it is called but the object may be mutated by the calls to *callbackfn*.

The range of elements processed by **map** is set before the first call to *callbackfn*. Elements which are appended to the array after the call to **map** begins will not be visited by *callbackfn*. If existing elements of the array are changed, their value as passed to *callbackfn* will be the value at the time **map** visits them; elements that are deleted after the call to **map** begins and before being visited are not visited.

When the **map** method is called with one or two arguments, the following steps are taken:

1. Let *O* be ? ToObject(**this** value).
2. Let *len* be ? LengthOfArrayLike(*O*).
3. If IsCallable(*callbackfn*) is **false**, throw a **TypeError** exception.
4. Let *A* be ? ArraySpeciesCreate(*O*, *len*).
5. Let *k* be 0.
6. Repeat, while *k* < *len*
   a. Let *Pk* be ! ToString(*k*).
   b. Let *kPresent* be ? HasProperty(*O*, *Pk*).
   c. If *kPresent* is **true**, then
      i. Let *kValue* be ? Get(*O*, *Pk*).
      ii. Let *mappedValue* be ? Call(*callbackfn*, *thisArg*, « *kValue*, *k*, *O* »).
      iii. Perform ? CreateDataPropertyOrThrow(*A*, *Pk*, *mappedValue*).
   d. Set *k* to *k* + 1.
7. Return *A*.

NOTE 2 The **map** function is intentionally generic; it does not require that its **this** value be an Array object. Therefore it can be transferred to other kinds of objects for use as a method.

22.1.3.19 Array.prototype.pop ( )

NOTE 1 The last element of the array is removed from the array and returned.

When the **pop** method is called, the following steps are taken:

1. Let *O* be ? ToObject(**this** value).

2. Let *len* be ? LengthOfArrayLike(*O*).
3. If *len* is zero, then
    a. Perform ? Set(*O*, **"length"**, 0, **true**).
    b. Return **undefined**.
4. Else,
    a. Assert: *len* > 0.
    b. Let *newLen* be *len* - 1.
    c. Let *index* be ! ToString(*newLen*).
    d. Let *element* be ? Get(*O*, *index*).
    e. Perform ? DeletePropertyOrThrow(*O*, *index*).
    f. Perform ? Set(*O*, **"length"**, *newLen*, **true**).
    g. Return *element*.

NOTE 2 The **`pop`** function is intentionally generic; it does not require that its **this** value be an Array object. Therefore it can be transferred to other kinds of objects for use as a method.

22.1.3.20 Array.prototype.push (...*items*)

NOTE 1 The arguments are appended to the end of the array, in the order in which they appear. The new length of the array is returned as the result of the call.

When the **`push`** method is called with zero or more arguments, the following steps are taken:

1. Let *O* be ? ToObject(**this** value).
2. Let *len* be ? LengthOfArrayLike(*O*).
3. Let *items* be a List whose elements are, in left to right order, the arguments that were passed to this function invocation.
4. Let *argCount* be the number of elements in *items*.
5. If *len* + *argCount* > 2^{53} - 1, throw a **TypeError** exception.
6. Repeat, while *items* is not empty
    a. Remove the first element from *items* and let *E* be the value of the element.
    b. Perform ? Set(*O*, ! ToString(*len*), *E*, **true**).
    c. Set *len* to *len* + 1.
7. Perform ? Set(*O*, **"length"**, *len*, **true**).
8. Return *len*.

The **"length"** property of the **`push`** method is 1.

NOTE 2 The **`push`** function is intentionally generic; it does not require that its **this** value be an Array object. Therefore it can be transferred to other kinds of objects for use as a method.

22.1.3.21 Array.prototype.reduce (*callbackfn* [, *initialValue*])

NOTE 1 *callbackfn* should be a function that takes four arguments. **`reduce`** calls the callback, as a function, once for each element after the first element present in the array, in ascending order.

callbackfn is called with four arguments: the *previousValue* (value from the previous call to *callbackfn*), the *currentValue* (value of the current element), the *currentIndex*, and the object being traversed. The first time that callback is called, the *previousValue* and *currentValue* can be one of two values. If an *initialValue* was supplied in the call to **`reduce`**, then *previousValue* will be equal to *initialValue* and *currentValue* will be equal to the first value in the array. If no *initialValue* was supplied, then *previousValue* will be equal to the first value in the array and *currentValue* will be equal to the second. It is a **TypeError** if the array contains no elements and *initialValue* is not provided.

`reduce` does not directly mutate the object on which it is called but the object may be mutated by the calls to *callbackfn*.

The range of elements processed by **`reduce`** is set before the first call to *callbackfn*. Elements that are appended to the array after the call to **`reduce`** begins will not be visited by *callbackfn*. If existing elements of the array are changed, their value as passed to *callbackfn* will be the value at the time **`reduce`** visits them; elements that are deleted after the call to **`reduce`** begins and before being visited are not visited.

When the **`reduce`** method is called with one or two arguments, the following steps are taken:

1. Let *O* be ? ToObject(**this** value).
2. Let *len* be ? LengthOfArrayLike(*O*).
3. If IsCallable(*callbackfn*) is **false**, throw a **TypeError** exception.
4. If *len* is 0 and *initialValue* is not present, throw a **TypeError** exception.
5. Let *k* be 0.
6. Let *accumulator* be **undefined**.
7. If *initialValue* is present, then
    a. Set *accumulator* to *initialValue*.
8. Else,
    a. Let *kPresent* be **false**.
    b. Repeat, while *kPresent* is **false** and $k < len$
        i. Let *Pk* be ! ToString(*k*).
        ii. Set *kPresent* to ? HasProperty(*O*, *Pk*).
        iii. If *kPresent* is **true**, then
            1. Set *accumulator* to ? Get(*O*, *Pk*).
        iv. Set *k* to $k + 1$.
    c. If *kPresent* is **false**, throw a **TypeError** exception.
9. Repeat, while $k < len$
    a. Let *Pk* be ! ToString(*k*).
    b. Let *kPresent* be ? HasProperty(*O*, *Pk*).
    c. If *kPresent* is **true**, then
        i. Let *kValue* be ? Get(*O*, *Pk*).
        ii. Set *accumulator* to ? Call(*callbackfn*, **undefined**, « *accumulator*, *kValue*, *k*, *O* »).
    d. Set *k* to $k + 1$.
10. Return *accumulator*.

NOTE 2 The **`reduce`** function is intentionally generic; it does not require that its **this** value be an Array object. Therefore it can be transferred to other kinds of objects for use as a method.

22.1.3.22 Array.prototype.reduceRight (*callbackfn* [, *initialValue*])

NOTE 1 *callbackfn* should be a function that takes four arguments. **`reduceRight`** calls the callback, as a function, once for each element after the first element present in the array, in descending order.

callbackfn is called with four arguments: the *previousValue* (value from the previous call to *callbackfn*), the *currentValue* (value of the current element), the *currentIndex*, and the object being traversed. The first time the function is called, the *previousValue* and *currentValue* can be one of two values. If an *initialValue* was supplied in the call to **`reduceRight`**, then *previousValue* will be equal to *initialValue* and *currentValue* will be equal to the last value in the array. If no *initialValue* was supplied, then *previousValue* will be equal to the last value in the array and *currentValue* will be equal to the second-to-last value. It is a **TypeError** if the array contains no elements and *initialValue* is not provided.

`reduceRight` does not directly mutate the object on which it is called but the object may be mutated by the calls to *callbackfn*.

The range of elements processed by **`reduceRight`** is set before the first call to *callbackfn*. Elements that are appended to the array after the call to **`reduceRight`** begins will not be visited by *callbackfn*. If existing elements of the array are changed by *callbackfn*, their value as passed to *callbackfn* will be the value at the time **`reduceRight`** visits them; elements that are deleted after the call to **`reduceRight`** begins and before being visited are not visited.

When the **`reduceRight`** method is called with one or two arguments, the following steps are taken:

1. Let *O* be ? ToObject(**this** value).
2. Let *len* be ? LengthOfArrayLike(*O*).
3. If IsCallable(*callbackfn*) is **false**, throw a **TypeError** exception.
4. If *len* is 0 and *initialValue* is not present, throw a **TypeError** exception.
5. Let *k* be *len* - 1.
6. Let *accumulator* be **undefined**.
7. If *initialValue* is present, then
    a. Set *accumulator* to *initialValue*.
8. Else,
    a. Let *kPresent* be **false**.
    b. Repeat, while *kPresent* is **false** and $k \geq 0$
        i. Let *Pk* be ! ToString(*k*).
        ii. Set *kPresent* to ? HasProperty(*O*, *Pk*).
        iii. If *kPresent* is **true**, then
            1. Set *accumulator* to ? Get(*O*, *Pk*).
        iv. Set *k* to *k* - 1.
    c. If *kPresent* is **false**, throw a **TypeError** exception.
9. Repeat, while $k \geq 0$
    a. Let *Pk* be ! ToString(*k*).

b. Let *kPresent* be ? HasProperty(*O*, *Pk*).
c. If *kPresent* is **true**, then
    i. Let *kValue* be ? Get(*O*, *Pk*).
    ii. Set *accumulator* to ? Call(*callbackfn*, **undefined**, « *accumulator*, *kValue*, *k*, *O* »).
d. Set *k* to *k* - 1.

10. Return *accumulator*.

NOTE 2 The **`reduceRight`** function is intentionally generic; it does not require that its **this** value be an Array object. Therefore it can be transferred to other kinds of objects for use as a method.

22.1.3.23 Array.prototype.reverse ( )

NOTE 1 The elements of the array are rearranged so as to reverse their order. The object is returned as the result of the call.

When the **`reverse`** method is called, the following steps are taken:

1. Let *O* be ? ToObject(**this** value).
2. Let *len* be ? LengthOfArrayLike(*O*).
3. Let *middle* be floor(*len* / 2).
4. Let *lower* be 0.
5. Repeat, while *lower* ≠ *middle*
    a. Let *upper* be *len* - *lower* - 1.
    b. Let *upperP* be ! ToString(*upper*).
    c. Let *lowerP* be ! ToString(*lower*).
    d. Let *lowerExists* be ? HasProperty(*O*, *lowerP*).
    e. If *lowerExists* is **true**, then
        i. Let *lowerValue* be ? Get(*O*, *lowerP*).
    f. Let *upperExists* be ? HasProperty(*O*, *upperP*).
    g. If *upperExists* is **true**, then
        i. Let *upperValue* be ? Get(*O*, *upperP*).
    h. If *lowerExists* is **true** and *upperExists* is **true**, then
        i. Perform ? Set(*O*, *lowerP*, *upperValue*, **true**).
        ii. Perform ? Set(*O*, *upperP*, *lowerValue*, **true**).
    i. Else if *lowerExists* is **false** and *upperExists* is **true**, then
        i. Perform ? Set(*O*, *lowerP*, *upperValue*, **true**).
        ii. Perform ? DeletePropertyOrThrow(*O*, *upperP*).
    j. Else if *lowerExists* is **true** and *upperExists* is **false**, then
        i. Perform ? DeletePropertyOrThrow(*O*, *lowerP*).
        ii. Perform ? Set(*O*, *upperP*, *lowerValue*, **true**).
    k. Else,
        i. Assert: *lowerExists* and *upperExists* are both **false**.
        ii. No action is required.
    l. Set *lower* to *lower* + 1.
6. Return *O*.

NOTE 2 The **`reverse`** function is intentionally generic; it does not require that its **this** value be an Array object. Therefore, it can be transferred to other kinds of objects for use as a method.

22.1.3.24 Array.prototype.shift ( )

NOTE 1 The first element of the array is removed from the array and returned.

When the **`shift`** method is called, the following steps are taken:

1. Let *O* be ? ToObject(**this** value).
2. Let *len* be ? LengthOfArrayLike(*O*).
3. If *len* is zero, then
    a. Perform ? Set(*O*, **"length"**, 0, **true**).
    b. Return **undefined**.
4. Let *first* be ? Get(*O*, **"0"**).
5. Let *k* be 1.
6. Repeat, while *k* < *len*
    a. Let *from* be ! ToString(*k*).
    b. Let *to* be ! ToString(*k* - 1).
    c. Let *fromPresent* be ? HasProperty(*O*, *from*).
    d. If *fromPresent* is **true**, then
        i. Let *fromVal* be ? Get(*O*, *from*).
        ii. Perform ? Set(*O*, *to*, *fromVal*, **true**).
    e. Else,
        i. Assert: *fromPresent* is **false**.
        ii. Perform ? DeletePropertyOrThrow(*O*, *to*).
    f. Set *k* to *k* + 1.
7. Perform ? DeletePropertyOrThrow(*O*, ! ToString(*len* - 1)).
8. Perform ? Set(*O*, **"length"**, *len* - 1, **true**).
9. Return *first*.

NOTE 2 The **`shift`** function is intentionally generic; it does not require that its **this** value be an Array object. Therefore it can be transferred to other kinds of objects for use as a method.

22.1.3.25 Array.prototype.slice (*start*, *end*)

NOTE 1 The **`slice`** method takes two arguments, *start* and *end*, and returns an array containing the elements of the array from element *start* up to, but not including, element *end* (or through the end of the array if *end* is **undefined**). If *start* is negative, it is treated as *length* + *start* where *length* is the length of the array. If *end* is negative, it is treated as *length* + *end* where *length* is the length of the array.

The following steps are taken:

1. Let *O* be ? ToObject(**this** value).

2. Let *len* be ? LengthOfArrayLike(*O*).
3. Let *relativeStart* be ? ToInteger(*start*).
4. If *relativeStart* < 0, let *k* be max((*len* + *relativeStart*), 0); else let *k* be min(*relativeStart*, *len*).
5. If *end* is **undefined**, let *relativeEnd* be *len*; else let *relativeEnd* be ? ToInteger(*end*).
6. If *relativeEnd* < 0, let *final* be max((*len* + *relativeEnd*), 0); else let *final* be min(*relativeEnd*, *len*).
7. Let *count* be max(*final* - *k*, 0).
8. Let *A* be ? ArraySpeciesCreate(*O*, *count*).
9. Let *n* be 0.
10. Repeat, while *k* < *final*
    a. Let *Pk* be ! ToString(*k*).
    b. Let *kPresent* be ? HasProperty(*O*, *Pk*).
    c. If *kPresent* is **true**, then
        i. Let *kValue* be ? Get(*O*, *Pk*).
        ii. Perform ? CreateDataPropertyOrThrow(*A*, ! ToString(*n*), *kValue*).
    d. Set *k* to *k* + 1.
    e. Set *n* to *n* + 1.
11. Perform ? Set(*A*, **"length"**, *n*, **true**).
12. Return *A*.

NOTE 2 The explicit setting of the **"length"** property of the result Array in step 11 was necessary in previous editions of ECMAScript to ensure that its length was correct in situations where the trailing elements of the result Array were not present. Setting **"length"** became unnecessary starting in ES2015 when the result Array was initialized to its proper length rather than an empty Array but is carried forward to preserve backward compatibility.

NOTE 3 The `slice` function is intentionally generic; it does not require that its **this** value be an Array object. Therefore it can be transferred to other kinds of objects for use as a method.

22.1.3.26 Array.prototype.some (*callbackfn* [, *thisArg*])

NOTE 1 *callbackfn* should be a function that accepts three arguments and returns a value that is coercible to the Boolean value **true** or **false**. `some` calls *callbackfn* once for each element present in the array, in ascending order, until it finds one where *callbackfn* returns **true**. If such an element is found, `some` immediately returns **true**. Otherwise, `some` returns **false**. *callbackfn* is called only for elements of the array which actually exist; it is not called for missing elements of the array.

If a *thisArg* parameter is provided, it will be used as the **this** value for each invocation of *callbackfn*. If it is not provided, **undefined** is used instead.

callbackfn is called with three arguments: the value of the element, the index of the element, and the object being traversed.

`some` does not directly mutate the object on which it is called but the object may be mutated by the calls to *callbackfn*.

The range of elements processed by `some` is set before the first call to *callbackfn*. Elements that are appended to the array after the call to `some` begins will not be visited by *callbackfn*. If existing elements of the array are changed, their value as passed to *callbackfn* will be the value at the time that `some` visits them; elements that are deleted after the call to `some` begins and before being visited are not visited. `some` acts like the "exists" quantifier in mathematics. In particular, for an empty array, it returns **false**.

When the `some` method is called with one or two arguments, the following steps are taken:

1. Let *O* be ? ToObject(**this** value).
2. Let *len* be ? LengthOfArrayLike(*O*).
3. If IsCallable(*callbackfn*) is **false**, throw a **TypeError** exception.
4. Let *k* be 0.
5. Repeat, while *k* < *len*
    a. Let *Pk* be ! ToString(*k*).
    b. Let *kPresent* be ? HasProperty(*O*, *Pk*).
    c. If *kPresent* is **true**, then
        i. Let *kValue* be ? Get(*O*, *Pk*).
        ii. Let *testResult* be ! ToBoolean(? Call(*callbackfn*, *thisArg*, « *kValue*, *k*, *O* »)).
        iii. If *testResult* is **true**, return **true**.
    d. Set *k* to *k* + 1.
6. Return **false**.

NOTE 2 The `some` function is intentionally generic; it does not require that its **this** value be an Array object. Therefore it can be transferred to other kinds of objects for use as a method.

22.1.3.27 Array.prototype.sort (*comparefn*)

The elements of this array are sorted. The sort must be stable (that is, elements that compare equal must remain in their original order). If *comparefn* is not **undefined**, it should be a function that accepts two arguments *x* and *y* and returns a negative value if *x* < *y*, zero if *x* = *y*, or a positive value if *x* > *y*.

Upon entry, the following steps are performed to initialize evaluation of the `sort` function:

1. If *comparefn* is not **undefined** and IsCallable(*comparefn*) is **false**, throw a **TypeError** exception.
2. Let *obj* be ? ToObject(**this** value).
3. Let *len* be ? LengthOfArrayLike(*obj*).

Within this specification of the `sort` method, an object, *obj*, is said to be *sparse* if the following algorithm returns **true**:

1. For each integer *i* in the range $0 \leq i < len$, do
    a. Let *elem* be *obj*.[[GetOwnProperty]](! ToString(*i*)).
    b. If *elem* is **undefined**, return **true**.
2. Return **false**.

The *sort order* is the ordering, after completion of this function, of the integer-indexed property values of *obj* whose integer indexes are less than *len*. The result of the `sort` function is then determined as follows:

If *comparefn* is not **undefined** and is not a consistent comparison function for the elements of this array (see below), the sort order is implementation-defined. The sort order is also implementation-defined if *comparefn* is **undefined** and SortCompare does not act as a consistent comparison function.

Let *proto* be *obj*.[[GetPrototypeOf]](). If *proto* is not **null** and there exists an integer *j* such that all of the conditions below are satisfied then the sort order is implementation-defined:

- *obj* is sparse
- $0 \leq j < len$
- HasProperty(*proto*, ToString(*j*)) is **true**.

The sort order is also implementation-defined if *obj* is sparse and any of the following conditions are true:

- IsExtensible(*obj*) is **false**.
- Any integer index property of *obj* whose name is a nonnegative integer less than *len* is a data property whose [[Configurable]] attribute is **false**.

The sort order is also implementation-defined if any of the following conditions are true:

- If *obj* is an exotic object (including Proxy exotic objects) whose behaviour for [[Get]], [[Set]], [[Delete]], and [[GetOwnProperty]] is not the ordinary object implementation of these internal methods.
- If any index property of *obj* whose name is a nonnegative integer less than *len* is an accessor property or is a data property whose [[Writable]] attribute is **false**.
- If *comparefn* is **undefined** and the application of ToString to any value passed as an argument to SortCompare modifies *obj* or any object on *obj*'s prototype chain.
- If *comparefn* is **undefined** and all applications of ToString, to any specific value passed as an argument to SortCompare, do not produce the same result.

The following steps are taken:

1. Perform an implementation-dependent sequence of calls to the Get, Set, DeletePropertyOrThrow, and HasOwnProperty abstract operation with *obj* as the first argument, and to SortCompare (described below), such that:
    - The property key argument for each call to Get, Set, HasOwnProperty, or DeletePropertyOrThrow is the string representation of a nonnegative integer less than *len*.
    - The `Throw` argument for every call to Set is **true**.
    - The arguments for calls to SortCompare are values returned by a previous call to the Get abstract operation, unless the properties accessed by those previous calls did not exist according to

HasOwnProperty. If both prospective arguments to SortCompare correspond to non-existent properties, use **+0** instead of calling SortCompare. If only the first prospective argument is non-existent use +1. If only the second prospective argument is non-existent use -1.
    - If *obj* is not sparse then DeletePropertyOrThrow must not be called.
    - If an abrupt completion is returned from any of these operations, it is immediately returned as the value of this function.
2. Return *obj*.

Unless the sort order is specified above to be implementation-defined, the returned object must have the following two characteristics:

- There must be some mathematical permutation π of the nonnegative integers less than *len*, such that for every nonnegative integer *j* less than *len*, if property old[*j*] existed, then new[π(*j*)] is exactly the same value as old[*j*]. But if property old[*j*] did not exist, then new[π(*j*)] does not exist.
- Then for all nonnegative integers *j* and *k*, each less than *len*, if SortCompare(old[*j*], old[*k*]) < 0 (see SortCompare below), then new[π(*j*)] < new[π(*k*)].

Here the notation old[*j*] is used to refer to the hypothetical result of calling Get(*obj*, *j*) before this function is executed, and the notation new[*j*] to refer to the hypothetical result of calling Get(*obj*, *j*) after this function has been executed.

A function *comparefn* is a consistent comparison function for a set of values *S* if all of the requirements below are met for all values *a*, *b*, and *c* (possibly the same value) in the set *S*: The notation $a <_{CF} b$ means *comparefn*(*a*, *b*) < 0; $a =_{CF} b$ means *comparefn*(*a*, *b*) = 0 (of either sign); and $a >_{CF} b$ means *comparefn*(*a*, *b*) > 0.

- Calling *comparefn*(*a*, *b*) always returns the same value *v* when given a specific pair of values *a* and *b* as its two arguments. Furthermore, Type(*v*) is Number, and *v* is not **NaN**. Note that this implies that exactly one of $a <_{CF} b$, $a =_{CF} b$, and $a >_{CF} b$ will be true for a given pair of *a* and *b*.
- Calling *comparefn*(*a*, *b*) does not modify *obj* or any object on *obj*'s prototype chain.
- $a =_{CF} a$ (reflexivity)
- If $a =_{CF} b$, then $b =_{CF} a$ (symmetry)
- If $a =_{CF} b$ and $b =_{CF} c$, then $a =_{CF} c$ (transitivity of $=_{CF}$)
- If $a <_{CF} b$ and $b <_{CF} c$, then $a <_{CF} c$ (transitivity of $<_{CF}$)
- If $a >_{CF} b$ and $b >_{CF} c$, then $a >_{CF} c$ (transitivity of $>_{CF}$)

NOTE 1 The above conditions are necessary and sufficient to ensure that *comparefn* divides the set *S* into equivalence classes and that these equivalence classes are totally ordered.

NOTE 2 The **`sort`** function is intentionally generic; it does not require that its **this** value be an Array object. Therefore, it can be transferred to other kinds of objects for use as a method.

22.1.3.27.1 Runtime Semantics: SortCompare (*x*, *y*)

The SortCompare abstract operation is called with two arguments *x* and *y*. It also has access to the *comparefn* argument passed to the current invocation of the **`sort`** method. The following steps are taken:

1. If *x* and *y* are both **undefined**, return **+0**.
2. If *x* is **undefined**, return 1.
3. If *y* is **undefined**, return -1.

4. If *comparefn* is not **undefined**, then
    a. Let *v* be ? ToNumber(? Call(*comparefn*, **undefined**, « *x*, *y* »)).
    b. If *v* is **NaN**, return **+0**.
    c. Return *v*.
5. Let *xString* be ? ToString(*x*).
6. Let *yString* be ? ToString(*y*).
7. Let *xSmaller* be the result of performing Abstract Relational Comparison *xString* < *yString*.
8. If *xSmaller* is **true**, return -1.
9. Let *ySmaller* be the result of performing Abstract Relational Comparison *yString* < *xString*.
10. If *ySmaller* is **true**, return 1.
11. Return **+0**.

NOTE 1 Because non-existent property values always compare greater than **undefined** property values, and **undefined** always compares greater than any other value, **undefined** property values always sort to the end of the result, followed by non-existent property values.

NOTE 2 Method calls performed by the ToString abstract operations in steps 5 and 7 have the potential to cause SortCompare to not behave as a consistent comparison function.

22.1.3.28 Array.prototype.splice (*start*, *deleteCount*, ...*items*)

NOTE 1 When the `splice` method is called with two or more arguments *start*, *deleteCount* and zero or more *items*, the *deleteCount* elements of the array starting at integer index *start* are replaced by the arguments *items*. An Array object containing the deleted elements (if any) is returned.

The following steps are taken:

1. Let *O* be ? ToObject(**this** value).
2. Let *len* be ? LengthOfArrayLike(*O*).
3. Let *relativeStart* be ? ToInteger(*start*).
4. If *relativeStart* < 0, let *actualStart* be max((*len* + *relativeStart*), 0); else let *actualStart* be min(*relativeStart*, *len*).
5. If the number of actual arguments is 0, then
    a. Let *insertCount* be 0.
    b. Let *actualDeleteCount* be 0.
6. Else if the number of actual arguments is 1, then
    a. Let *insertCount* be 0.
    b. Let *actualDeleteCount* be *len* - *actualStart*.
7. Else,
    a. Let *insertCount* be the number of actual arguments minus 2.
    b. Let *dc* be ? ToInteger(*deleteCount*).
    c. Let *actualDeleteCount* be min(max(*dc*, 0), *len* - *actualStart*).
8. If *len* + *insertCount* - *actualDeleteCount* > 2^{53} - 1, throw a **TypeError** exception.
9. Let *A* be ? ArraySpeciesCreate(*O*, *actualDeleteCount*).
10. Let *k* be 0.
11. Repeat, while *k* < *actualDeleteCount*
    a. Let *from* be ! ToString(*actualStart* + *k*).

b. Let *fromPresent* be ? HasProperty(*O*, *from*).
c. If *fromPresent* is **true**, then
i. Let *fromValue* be ? Get(*O*, *from*).
ii. Perform ? CreateDataPropertyOrThrow(*A*, ! ToString(*k*), *fromValue*).
d. Set *k* to *k* + 1.
12. Perform ? Set(*A*, **"length"**, *actualDeleteCount*, **true**).
13. Let *items* be a List whose elements are, in left to right order, the portion of the actual argument list starting with the third argument. The list is empty if fewer than three arguments were passed.
14. Let *itemCount* be the number of elements in *items*.
15. If *itemCount* < *actualDeleteCount*, then
a. Set *k* to *actualStart*.
b. Repeat, while *k* < (*len* - *actualDeleteCount*)
i. Let *from* be ! ToString(*k* + *actualDeleteCount*).
ii. Let *to* be ! ToString(*k* + *itemCount*).
iii. Let *fromPresent* be ? HasProperty(*O*, *from*).
iv. If *fromPresent* is **true**, then
1. Let *fromValue* be ? Get(*O*, *from*).
2. Perform ? Set(*O*, *to*, *fromValue*, **true**).
v. Else,
1. Assert: *fromPresent* is **false**.
2. Perform ? DeletePropertyOrThrow(*O*, *to*).
vi. Set *k* to *k* + 1.
c. Set *k* to *len*.
d. Repeat, while *k* > (*len* - *actualDeleteCount* + *itemCount*)
i. Perform ? DeletePropertyOrThrow(*O*, ! ToString(*k* - 1)).
ii. Set *k* to *k* - 1.
16. Else if *itemCount* > *actualDeleteCount*, then
a. Set *k* to (*len* - *actualDeleteCount*).
b. Repeat, while *k* > *actualStart*
i. Let *from* be ! ToString(*k* + *actualDeleteCount* - 1).
ii. Let *to* be ! ToString(*k* + *itemCount* - 1).
iii. Let *fromPresent* be ? HasProperty(*O*, *from*).
iv. If *fromPresent* is **true**, then
1. Let *fromValue* be ? Get(*O*, *from*).
2. Perform ? Set(*O*, *to*, *fromValue*, **true**).
v. Else,
1. Assert: *fromPresent* is **false**.
2. Perform ? DeletePropertyOrThrow(*O*, *to*).
vi. Set *k* to *k* - 1.
17. Set *k* to *actualStart*.
18. Repeat, while *items* is not empty
a. Remove the first element from *items* and let *E* be the value of that element.
b. Perform ? Set(*O*, ! ToString(*k*), *E*, **true**).
c. Set *k* to *k* + 1.
19. Perform ? Set(*O*, **"length"**, *len* - *actualDeleteCount* + *itemCount*, **true**).
20. Return *A*.

NOTE 2 The explicit setting of the **"length"** property of the result Array in step 19 was necessary in previous editions of ECMAScript to ensure that its length was correct in situations where the trailing elements of the result Array were not present. Setting **"length"** became unnecessary starting in ES2015 when the result Array was initialized to its proper length rather than an empty Array but is carried forward to preserve backward compatibility.

NOTE 3 The **`splice`** function is intentionally generic; it does not require that its **this** value be an Array object. Therefore it can be transferred to other kinds of objects for use as a method.

22.1.3.29 Array.prototype.toLocaleString ([*reserved1* [, *reserved2*]])

An ECMAScript implementation that includes the ECMA-402 Internationalization API must implement the **`Array.prototype.toLocaleString`** method as specified in the ECMA-402 specification. If an ECMAScript implementation does not include the ECMA-402 API the following specification of the **`toLocaleString`** method is used.

NOTE 1 The first edition of ECMA-402 did not include a replacement specification for the **`Array.prototype.toLocaleString`** method.

The meanings of the optional parameters to this method are defined in the ECMA-402 specification; implementations that do not include ECMA-402 support must not use those parameter positions for anything else.

The following steps are taken:

1. Let *array* be ? ToObject(**this** value).
2. Let *len* be ? LengthOfArrayLike(*array*).
3. Let *separator* be the String value for the list-separator String appropriate for the host environment's current locale (this is derived in an implementation-defined way).
4. Let *R* be the empty String.
5. Let *k* be 0.
6. Repeat, while *k* < *len*
   a. If *k* > 0, then
      i. Set *R* to the string-concatenation of *R* and *separator*.
   b. Let *nextElement* be ? Get(*array*, ! ToString(*k*)).
   c. If *nextElement* is not **undefined** or **null**, then
      i. Let *S* be ? ToString(? Invoke(*nextElement*, **"toLocaleString"**)).
      ii. Set *R* to the string-concatenation of *R* and *S*.
   d. Set *k* to *k* + 1.
7. Return *R*.

NOTE 2 The elements of the array are converted to Strings using their **`toLocaleString`** methods, and these Strings are then concatenated, separated by occurrences of a separator String that has been derived in an implementation-defined locale-specific way. The result of calling this function is intended to be analogous to the result of **`toString`**, except that the result of this function is intended to be locale-specific.

NOTE 3 The **`toLocaleString`** function is intentionally generic; it does not require that its **this** value be an Array object. Therefore it can be transferred to other kinds of objects for use as a method.

22.1.3.30 Array.prototype.toString ( )

When the **`toString`** method is called, the following steps are taken:

1. Let *array* be ? ToObject(**this** value).
2. Let *func* be ? Get(*array*, **"join"**).
3. If IsCallable(*func*) is **false**, set *func* to the intrinsic function %Object.prototype.toString%.
4. Return ? Call(*func*, *array*).

NOTE The **`toString`** function is intentionally generic; it does not require that its **this** value be an Array object. Therefore it can be transferred to other kinds of objects for use as a method.

22.1.3.31 Array.prototype.unshift (...*items*)

NOTE 1 The arguments are prepended to the start of the array, such that their order within the array is the same as the order in which they appear in the argument list.

When the **`unshift`** method is called with zero or more arguments *item1*, *item2*, etc., the following steps are taken:

1. Let *O* be ? ToObject(**this** value).
2. Let *len* be ? LengthOfArrayLike(*O*).
3. Let *argCount* be the number of actual arguments.
4. If *argCount* > 0, then
    a. If *len* + *argCount* > 2^{53} - 1, throw a **TypeError** exception.
    b. Let *k* be *len*.
    c. Repeat, while *k* > 0,
        i. Let *from* be ! ToString(*k* - 1).
        ii. Let *to* be ! ToString(*k* + *argCount* - 1).
        iii. Let *fromPresent* be ? HasProperty(*O*, *from*).
        iv. If *fromPresent* is **true**, then
            1. Let *fromValue* be ? Get(*O*, *from*).
            2. Perform ? Set(*O*, *to*, *fromValue*, **true**).
        v. Else,
            1. Assert: *fromPresent* is **false**.
            2. Perform ? DeletePropertyOrThrow(*O*, *to*).
        vi. Set *k* to *k* - 1.
    d. Let *j* be 0.
    e. Let *items* be a List whose elements are, in left to right order, the arguments that were passed to this function invocation.
    f. Repeat, while *items* is not empty
        i. Remove the first element from *items* and let *E* be the value of that element.
        ii. Perform ? Set(*O*, ! ToString(*j*), *E*, **true**).
        iii. Set *j* to *j* + 1.

5. Perform ? Set(*O*, **"length"**, *len* + *argCount*, **true**).
6. Return *len* + *argCount*.

The **"length"** property of the **`unshift`** method is 1.

> NOTE 2 The **`unshift`** function is intentionally generic; it does not require that its **this** value be an Array object. Therefore it can be transferred to other kinds of objects for use as a method.

22.1.3.32 Array.prototype.values ( )

The following steps are taken:

1. Let *O* be ? ToObject(**this** value).
2. Return CreateArrayIterator(*O*, value).

This function is the *%ArrayProto_values%* intrinsic object.

22.1.3.33 Array.prototype [@@iterator] ( )

The initial value of the @@iterator property is the same function object as the initial value of the **`Array.prototype.values`** property.

22.1.3.34 Array.prototype [@@unscopables]

The initial value of the @@unscopables data property is an object created by the following steps:

1. Let *unscopableList* be OrdinaryObjectCreate(**null**).
2. Perform ! CreateDataPropertyOrThrow(*unscopableList*, **"copyWithin"**, **true**).
3. Perform ! CreateDataPropertyOrThrow(*unscopableList*, **"entries"**, **true**).
4. Perform ! CreateDataPropertyOrThrow(*unscopableList*, **"fill"**, **true**).
5. Perform ! CreateDataPropertyOrThrow(*unscopableList*, **"find"**, **true**).
6. Perform ! CreateDataPropertyOrThrow(*unscopableList*, **"findIndex"**, **true**).
7. Perform ! CreateDataPropertyOrThrow(*unscopableList*, **"flat"**, **true**).
8. Perform ! CreateDataPropertyOrThrow(*unscopableList*, **"flatMap"**, **true**).
9. Perform ! CreateDataPropertyOrThrow(*unscopableList*, **"includes"**, **true**).
10. Perform ! CreateDataPropertyOrThrow(*unscopableList*, **"keys"**, **true**).
11. Perform ! CreateDataPropertyOrThrow(*unscopableList*, **"values"**, **true**).
12. Return *unscopableList*.

This property has the attributes { [[Writable]]: **false**, [[Enumerable]]: **false**, [[Configurable]]: **true** }.

> NOTE The own property names of this object are property names that were not included as standard properties of **`Array.prototype`** prior to the ECMAScript 2015 specification. These names are ignored for **`with`** statement binding purposes in order to preserve the behaviour of existing code that might use one of these names as a binding in an outer scope that is shadowed by a **`with`** statement whose binding object is an Array object.

22.1.4 Properties of Array Instances

Array instances are Array exotic objects and have the internal methods specified for such objects. Array instances inherit properties from the Array prototype object.

Array instances have a **"length"** property, and a set of enumerable properties with array index names.

22.1.4.1 length

The **"length"** property of an Array instance is a data property whose value is always numerically greater than the name of every configurable own property whose name is an array index.

The **"length"** property initially has the attributes { [[Writable]]: **true**, [[Enumerable]]: **false**, [[Configurable]]: **false** }.

> NOTE Reducing the value of the **"length"** property has the side-effect of deleting own array elements whose array index is between the old and new length values. However, non-configurable properties can not be deleted. Attempting to set the **"length"** property of an Array object to a value that is numerically less than or equal to the largest numeric own property name of an existing non-configurable array-indexed property of the array will result in the length being set to a numeric value that is one greater than that non-configurable numeric own property name. See 9.4.2.1.

22.1.5 Array Iterator Objects

An Array Iterator is an object, that represents a specific iteration over some specific Array instance object. There is not a named constructor for Array Iterator objects. Instead, Array iterator objects are created by calling certain methods of Array instance objects.

22.1.5.1 CreateArrayIterator (*array*, *kind*)

Several methods of Array objects return Iterator objects. The abstract operation CreateArrayIterator with arguments *array* and *kind* is used to create such iterator objects. It performs the following steps:

1. Assert: Type(*array*) is Object.
2. Assert: *kind* is key+value, key, or value.
3. Let *iterator* be OrdinaryObjectCreate(%ArrayIteratorPrototype%, « [[IteratedArrayLike]], [[ArrayLikeNextIndex]], [[ArrayLikeIterationKind]] »).
4. Set *iterator*.[[IteratedArrayLike]] to *array*.
5. Set *iterator*.[[ArrayLikeNextIndex]] to 0.
6. Set *iterator*.[[ArrayLikeIterationKind]] to *kind*.
7. Return *iterator*.

22.1.5.2 The %ArrayIteratorPrototype% Object

The *%ArrayIteratorPrototype%* object:

- has properties that are inherited by all Array Iterator Objects.
- is an ordinary object.
- has a [[Prototype]] internal slot whose value is %IteratorPrototype%.

- has the following properties:

22.1.5.2.1 %ArrayIteratorPrototype%.next ( )

1. Let *O* be the **this** value.
2. If Type(*O*) is not Object, throw a **TypeError** exception.
3. If *O* does not have all of the internal slots of an Array Iterator Instance (22.1.5.3), throw a **TypeError** exception.
4. Let *a* be *O*.[[IteratedArrayLike]].
5. If *a* is **undefined**, return CreateIterResultObject(**undefined**, **true**).
6. Let *index* be *O*.[[ArrayLikeNextIndex]].
7. Let *itemKind* be *O*.[[ArrayLikeIterationKind]].
8. If *a* has a [[TypedArrayName]] internal slot, then
    a. If IsDetachedBuffer(*a*.[[ViewedArrayBuffer]]) is **true**, throw a **TypeError** exception.
    b. Let *len* be *a*.[[ArrayLength]].
9. Else,
    a. Let *len* be ? LengthOfArrayLike(*a*).
10. If *index* ≥ *len*, then
    a. Set *O*.[[IteratedArrayLike]] to **undefined**.
    b. Return CreateIterResultObject(**undefined**, **true**).
11. Set *O*.[[ArrayLikeNextIndex]] to *index* + 1.
12. If *itemKind* is key, return CreateIterResultObject(*index*, **false**).
13. Let *elementKey* be ! ToString(*index*).
14. Let *elementValue* be ? Get(*a*, *elementKey*).
15. If *itemKind* is value, let *result* be *elementValue*.
16. Else,
    a. Assert: *itemKind* is key+value.
    b. Let *result* be ! CreateArrayFromList(« *index*, *elementValue* »).
17. Return CreateIterResultObject(*result*, **false**).

22.1.5.2.2 %ArrayIteratorPrototype% [@@toStringTag]

The initial value of the @@toStringTag property is the String value **"Array Iterator"**.

This property has the attributes { [[Writable]]: **false**, [[Enumerable]]: **false**, [[Configurable]]: **true** }.

22.1.5.3 Properties of Array Iterator Instances

Array Iterator instances are ordinary objects that inherit properties from the %ArrayIteratorPrototype% intrinsic object. Array Iterator instances are initially created with the internal slots listed in Table 60.

Table 60: Internal Slots of Array Iterator Instances

Internal Slot	Description
[[IteratedArrayLike]]	The array-like object that is being iterated.
[[ArrayLikeNextIndex]]	The integer index of the next element to be examined by this iterator.
[[ArrayLikeIterationKind]]	A String value that identifies what is returned for each element of the iteration. The possible values are: key, value, key+value.

22.2 TypedArray Objects

TypedArray objects present an array-like view of an underlying binary data buffer (24.1). Each element of a *TypedArray* instance has the same underlying binary scalar data type. There is a distinct *TypedArray* constructor, listed in Table 61, for each of the supported element types. Each constructor in Table 61 has a corresponding distinct prototype object.

Table 61: The TypedArray Constructors

Constructor Name and Intrinsic	Element Type	Element Size	Conversion Operation	Description
Int8Array %Int8Array%	Int8	1	ToInt8	8-bit 2's complement signed integer
Uint8Array %Uint8Array%	Uint8	1	ToUint8	8-bit unsigned integer
Uint8ClampedArray %Uint8ClampedArray%	Uint8C	1	ToUint8Clamp	8-bit unsigned integer (clamped conversion)
Int16Array %Int16Array%	Int16	2	ToInt16	16-bit 2's complement signed integer
Uint16Array %Uint16Array%	Uint16	2	ToUint16	16-bit unsigned integer
Int32Array %Int32Array%	Int32	4	ToInt32	32-bit 2's complement signed integer
Uint32Array %Uint32Array%	Uint32	4	ToUint32	32-bit unsigned integer
BigInt64Array %BigInt64Array%	BigInt64	8	ToBigInt64	64-bit two's complement signed integer
BigUint64Array %BigUint64Array%	BigUint64	8	ToBigUint64	64-bit unsigned integer
Float32Array %Float32Array%	Float32	4		32-bit IEEE floating point
Float64Array %Float64Array%	Float64	8		64-bit IEEE floating point

In the definitions below, references to *TypedArray* should be replaced with the appropriate constructor name from the above table.

22.2.1 The %TypedArray% Intrinsic Object

The *%TypedArray%* intrinsic object:

- is a constructor function object that all of the *TypedArray* constructor objects inherit from.

- along with its corresponding prototype object, provides common properties that are inherited by all *TypedArray* constructors and their instances.
- does not have a global name or appear as a property of the global object.
- acts as the abstract superclass of the various *TypedArray* constructors.
- will throw an error when invoked, because it is an abstract class constructor. The *TypedArray* constructors do not perform a `super` call to it.

22.2.1.1 %TypedArray% ( )

The %TypedArray% constructor performs the following steps:

1. Throw a **TypeError** exception.

The **"length"** property of the %TypedArray% constructor function is 0.

22.2.2 Properties of the %TypedArray% Intrinsic Object

The %TypedArray% intrinsic object:

- has a [[Prototype]] internal slot whose value is %Function.prototype%.
- has a **"name"** property whose value is **"TypedArray"**.
- has the following properties:

22.2.2.1 %TypedArray%.from (*source* [, *mapfn* [, *thisArg*]])

When the `from` method is called with argument *source*, and optional arguments *mapfn* and *thisArg*, the following steps are taken:

1. Let *C* be the **this** value.
2. If IsConstructor(*C*) is **false**, throw a **TypeError** exception.
3. If *mapfn* is **undefined**, let *mapping* be **false**.
4. Else,
   a. If IsCallable(*mapfn*) is **false**, throw a **TypeError** exception.
   b. Let *mapping* be **true**.
5. Let *usingIterator* be ? GetMethod(*source*, @@iterator).
6. If *usingIterator* is not **undefined**, then
   a. Let *values* be ? IterableToList(*source*, *usingIterator*).
   b. Let *len* be the number of elements in *values*.
   c. Let *targetObj* be ? TypedArrayCreate(*C*, « *len* »).
   d. Let *k* be 0.
   e. Repeat, while *k* < *len*
      i. Let *Pk* be ! ToString(*k*).
      ii. Let *kValue* be the first element of *values* and remove that element from *values*.
      iii. If *mapping* is **true**, then
         1. Let *mappedValue* be ? Call(*mapfn*, *thisArg*, « *kValue*, *k* »).
      iv. Else, let *mappedValue* be *kValue*.
      v. Perform ? Set(*targetObj*, *Pk*, *mappedValue*, **true**).
      vi. Set *k* to *k* + 1.
   f. Assert: *values* is now an empty List.

g. Return *targetObj*.

7. NOTE: *source* is not an Iterable so assume it is already an array-like object.
8. Let *arrayLike* be ! ToObject(*source*).
9. Let *len* be ? LengthOfArrayLike(*arrayLike*).
10. Let *targetObj* be ? TypedArrayCreate(*C*, « *len* »).
11. Let *k* be 0.
12. Repeat, while *k* < *len*
    a. Let *Pk* be ! ToString(*k*).
    b. Let *kValue* be ? Get(*arrayLike*, *Pk*).
    c. If *mapping* is **true**, then
        i. Let *mappedValue* be ? Call(*mapfn*, *thisArg*, « *kValue*, *k* »).
    d. Else, let *mappedValue* be *kValue*.
    e. Perform ? Set(*targetObj*, *Pk*, *mappedValue*, **true**).
    f. Set *k* to *k* + 1.
13. Return *targetObj*.

22.2.2.1.1 Runtime Semantics: IterableToList (*items*, *method*)

The abstract operation IterableToList performs the following steps:

1. Let *iteratorRecord* be ? GetIterator(*items*, sync, *method*).
2. Let *values* be a new empty List.
3. Let *next* be **true**.
4. Repeat, while *next* is not **false**
    a. Set *next* to ? IteratorStep(*iteratorRecord*).
    b. If *next* is not **false**, then
        i. Let *nextValue* be ? IteratorValue(*next*).
        ii. Append *nextValue* to the end of the List *values*.
5. Return *values*.

22.2.2.2 %TypedArray%.of (...*items*)

When the **of** method is called with any number of arguments, the following steps are taken:

1. Let *len* be the actual number of arguments passed to this function.
2. Let *items* be the List of arguments passed to this function.
3. Let *C* be the **this** value.
4. If IsConstructor(*C*) is **false**, throw a **TypeError** exception.
5. Let *newObj* be ? TypedArrayCreate(*C*, « *len* »).
6. Let *k* be 0.
7. Repeat, while *k* < *len*
    a. Let *kValue* be *items*[*k*].
    b. Let *Pk* be ! ToString(*k*).
    c. Perform ? Set(*newObj*, *Pk*, *kValue*, **true**).
    d. Set *k* to *k* + 1.
8. Return *newObj*.

NOTE The *items* argument is assumed to be a well-formed rest argument value.

22.2.2.3 %TypedArray%.prototype

The initial value of %TypedArray%`.prototype` is the %TypedArray.prototype% intrinsic object.

This property has the attributes { [[Writable]]: **false**, [[Enumerable]]: **false**, [[Configurable]]: **false** }.

22.2.2.4 get %TypedArray% [@@species]

%TypedArray%`[@@species]` is an accessor property whose set accessor function is **undefined**. Its get accessor function performs the following steps:

1. Return the **this** value.

The value of the **"name"** property of this function is **"get [Symbol.species]"**.

> NOTE %TypedArray.prototype% methods normally use their **this** object's constructor to create a derived object. However, a subclass constructor may over-ride that default behaviour by redefining its @@species property.

22.2.3 Properties of the %TypedArray.prototype% Object

The *%TypedArray.prototype%* object:

- has a [[Prototype]] internal slot whose value is %Object.prototype%.
- is an ordinary object.
- does not have a [[ViewedArrayBuffer]] or any other of the internal slots that are specific to *TypedArray* instance objects.

22.2.3.1 get %TypedArray%.prototype.buffer

%TypedArray%`.prototype.buffer` is an accessor property whose set accessor function is **undefined**. Its get accessor function performs the following steps:

1. Let *O* be the **this** value.
2. Perform ? RequireInternalSlot(*O*, [[TypedArrayName]]).
3. Assert: *O* has a [[ViewedArrayBuffer]] internal slot.
4. Let *buffer* be *O*.[[ViewedArrayBuffer]].
5. Return *buffer*.

22.2.3.2 get %TypedArray%.prototype.byteLength

%TypedArray%`.prototype.byteLength` is an accessor property whose set accessor function is **undefined**. Its get accessor function performs the following steps:

1. Let *O* be the **this** value.
2. Perform ? RequireInternalSlot(*O*, [[TypedArrayName]]).
3. Assert: *O* has a [[ViewedArrayBuffer]] internal slot.
4. Let *buffer* be *O*.[[ViewedArrayBuffer]].
5. If IsDetachedBuffer(*buffer*) is **true**, return 0.

6. Let *size* be *O*.[[ByteLength]].
7. Return *size*.

22.2.3.3 get %TypedArray%.prototype.byteOffset

%TypedArray%`.prototype.byteOffset` is an accessor property whose set accessor function is **undefined**. Its get accessor function performs the following steps:

1. Let *O* be the **this** value.
2. Perform ? RequireInternalSlot(*O*, [[TypedArrayName]]).
3. Assert: *O* has a [[ViewedArrayBuffer]] internal slot.
4. Let *buffer* be *O*.[[ViewedArrayBuffer]].
5. If IsDetachedBuffer(*buffer*) is **true**, return 0.
6. Let *offset* be *O*.[[ByteOffset]].
7. Return *offset*.

22.2.3.4 %TypedArray%.prototype.constructor

The initial value of %TypedArray%`.prototype.constructor` is the %TypedArray% intrinsic object.

22.2.3.5 %TypedArray%.prototype.copyWithin (*target*, *start* [, *end*])

The interpretation and use of the arguments of %TypedArray%`.prototype.copyWithin` are the same as for `Array.prototype.copyWithin` as defined in 22.1.3.3.

The following steps are taken:

1. Let *O* be the **this** value.
2. Perform ? ValidateTypedArray(*O*).
3. Let *len* be *O*.[[ArrayLength]].
4. Let *relativeTarget* be ? ToInteger(*target*).
5. If *relativeTarget* < 0, let *to* be max((*len* + *relativeTarget*), 0); else let *to* be min(*relativeTarget*, *len*).
6. Let *relativeStart* be ? ToInteger(*start*).
7. If *relativeStart* < 0, let *from* be max((*len* + *relativeStart*), 0); else let *from* be min(*relativeStart*, *len*).
8. If *end* is **undefined**, let *relativeEnd* be *len*; else let *relativeEnd* be ? ToInteger(*end*).
9. If *relativeEnd* < 0, let *final* be max((*len* + *relativeEnd*), 0); else let *final* be min(*relativeEnd*, *len*).
10. Let *count* be min(*final* - *from*, *len* - *to*).
11. If *count* > 0, then
    a. NOTE: The copying must be performed in a manner that preserves the bit-level encoding of the source data.
    b. Let *buffer* be *O*.[[ViewedArrayBuffer]].
    c. If IsDetachedBuffer(*buffer*) is **true**, throw a **TypeError** exception.
    d. Let *typedArrayName* be the String value of *O*.[[TypedArrayName]].
    e. Let *elementSize* be the Element Size value specified in Table 61 for *typedArrayName*.
    f. Let *byteOffset* be *O*.[[ByteOffset]].
    g. Let *toByteIndex* be *to* × *elementSize* + *byteOffset*.
    h. Let *fromByteIndex* be *from* × *elementSize* + *byteOffset*.
    i. Let *countBytes* be *count* × *elementSize*.
    j. If *fromByteIndex* < *toByteIndex* and *toByteIndex* < *fromByteIndex* + *countBytes*, then

i. Let *direction* be -1.
ii. Set *fromByteIndex* to *fromByteIndex* + *countBytes* - 1.
iii. Set *toByteIndex* to *toByteIndex* + *countBytes* - 1.

k. Else,
i. Let *direction* be 1.

l. Repeat, while *countBytes* > 0
i. Let *value* be GetValueFromBuffer(*buffer*, *fromByteIndex*, Uint8, **true**, Unordered).
ii. Perform SetValueInBuffer(*buffer*, *toByteIndex*, Uint8, *value*, **true**, Unordered).
iii. Set *fromByteIndex* to *fromByteIndex* + *direction*.
iv. Set *toByteIndex* to *toByteIndex* + *direction*.
v. Set *countBytes* to *countBytes* - 1.

12. Return *O*.

22.2.3.5.1 Runtime Semantics: ValidateTypedArray (*O*)

When called with argument *O*, the following steps are taken:

1. Perform ? RequireInternalSlot(*O*, [[TypedArrayName]]).
2. Assert: *O* has a [[ViewedArrayBuffer]] internal slot.
3. Let *buffer* be *O*.[[ViewedArrayBuffer]].
4. If IsDetachedBuffer(*buffer*) is **true**, throw a **TypeError** exception.
5. Return *buffer*.

22.2.3.6 %TypedArray%.prototype.entries ( )

The following steps are taken:

1. Let *O* be the **this** value.
2. Perform ? ValidateTypedArray(*O*).
3. Return CreateArrayIterator(*O*, key+value).

22.2.3.7 %TypedArray%.prototype.every (*callbackfn* [, *thisArg*])

%TypedArray%`.prototype.every` is a distinct function that implements the same algorithm as `Array.prototype.every` as defined in 22.1.3.5 except that the **this** object's [[ArrayLength]] internal slot is accessed in place of performing a [[Get]] of **"length"**. The implementation of the algorithm may be optimized with the knowledge that the **this** value is an object that has a fixed length and whose integer-indexed properties are not sparse. However, such optimization must not introduce any observable changes in the specified behaviour of the algorithm and must take into account the possibility that calls to *callbackfn* may cause the **this** value to become detached.

This function is not generic. ValidateTypedArray is applied to the **this** value prior to evaluating the algorithm. If its result is an abrupt completion that exception is thrown instead of evaluating the algorithm.

22.2.3.8 %TypedArray%.prototype.fill (*value* [, *start* [, *end*]])

The interpretation and use of the arguments of %TypedArray%`.prototype.fill` are the same as for `Array.prototype.fill` as defined in 22.1.3.6.

The following steps are taken:

1. Let *O* be the **this** value.
2. Perform ? ValidateTypedArray(*O*).
3. Let *len* be *O*.[[ArrayLength]].
4. If *O*.[[ContentType]] is BigInt, set *value* to ? ToBigInt(*value*).
5. Otherwise, set *value* to ? ToNumber(*value*).
6. Let *relativeStart* be ? ToInteger(*start*).
7. If *relativeStart* < 0, let *k* be max((*len* + *relativeStart*), 0); else let *k* be min(*relativeStart*, *len*).
8. If *end* is **undefined**, let *relativeEnd* be *len*; else let *relativeEnd* be ? ToInteger(*end*).
9. If *relativeEnd* < 0, let *final* be max((*len* + *relativeEnd*), 0); else let *final* be min(*relativeEnd*, *len*).
10. If IsDetachedBuffer(*O*.[[ViewedArrayBuffer]]) is **true**, throw a **TypeError** exception.
11. Repeat, while *k* < *final*
    a. Let *Pk* be ! ToString(*k*).
    b. Perform ! Set(*O*, *Pk*, *value*, **true**).
    c. Set *k* to *k* + 1.
12. Return *O*.

22.2.3.9 %TypedArray%.prototype.filter (*callbackfn* [, *thisArg*])

The interpretation and use of the arguments of %TypedArray%`.prototype.filter` are the same as for `Array.prototype.filter` as defined in 22.1.3.7.

When the `filter` method is called with one or two arguments, the following steps are taken:

1. Let *O* be the **this** value.
2. Perform ? ValidateTypedArray(*O*).
3. Let *len* be *O*.[[ArrayLength]].
4. If IsCallable(*callbackfn*) is **false**, throw a **TypeError** exception.
5. Let *kept* be a new empty List.
6. Let *k* be 0.
7. Let *captured* be 0.
8. Repeat, while *k* < *len*
    a. Let *Pk* be ! ToString(*k*).
    b. Let *kValue* be ? Get(*O*, *Pk*).
    c. Let *selected* be ! ToBoolean(? Call(*callbackfn*, *thisArg*, « *kValue*, *k*, *O* »)).
    d. If *selected* is **true**, then
        i. Append *kValue* to the end of *kept*.
        ii. Set *captured* to *captured* + 1.
    e. Set *k* to *k* + 1.
9. Let *A* be ? TypedArraySpeciesCreate(*O*, « *captured* »).
10. Let *n* be 0.
11. For each element *e* of *kept*, do
    a. Perform ! Set(*A*, ! ToString(*n*), *e*, **true**).
    b. Set *n* to *n* + 1.
12. Return *A*.

This function is not generic. The **this** value must be an object with a [[TypedArrayName]] internal slot.

22.2.3.10 %TypedArray%.prototype.find (*predicate* [, *thisArg*])

%TypedArray%`.prototype.find` is a distinct function that implements the same algorithm as `Array.prototype.find` as defined in 22.1.3.8 except that the **this** object's [[ArrayLength]] internal slot is accessed in place of performing a [[Get]] of **"length"**. The implementation of the algorithm may be optimized with the knowledge that the **this** value is an object that has a fixed length and whose integer-indexed properties are not sparse. However, such optimization must not introduce any observable changes in the specified behaviour of the algorithm and must take into account the possibility that calls to *predicate* may cause the **this** value to become detached.

This function is not generic. ValidateTypedArray is applied to the **this** value prior to evaluating the algorithm. If its result is an abrupt completion that exception is thrown instead of evaluating the algorithm.

22.2.3.11 %TypedArray%.prototype.findIndex (*predicate* [, *thisArg*])

%TypedArray%`.prototype.findIndex` is a distinct function that implements the same algorithm as `Array.prototype.findIndex` as defined in 22.1.3.9 except that the **this** object's [[ArrayLength]] internal slot is accessed in place of performing a [[Get]] of **"length"**. The implementation of the algorithm may be optimized with the knowledge that the **this** value is an object that has a fixed length and whose integer-indexed properties are not sparse. However, such optimization must not introduce any observable changes in the specified behaviour of the algorithm and must take into account the possibility that calls to *predicate* may cause the **this** value to become detached.

This function is not generic. ValidateTypedArray is applied to the **this** value prior to evaluating the algorithm. If its result is an abrupt completion that exception is thrown instead of evaluating the algorithm.

22.2.3.12 %TypedArray%.prototype.forEach (*callbackfn* [, *thisArg*])

%TypedArray%`.prototype.forEach` is a distinct function that implements the same algorithm as `Array.prototype.forEach` as defined in 22.1.3.12 except that the **this** object's [[ArrayLength]] internal slot is accessed in place of performing a [[Get]] of **"length"**. The implementation of the algorithm may be optimized with the knowledge that the **this** value is an object that has a fixed length and whose integer-indexed properties are not sparse. However, such optimization must not introduce any observable changes in the specified behaviour of the algorithm and must take into account the possibility that calls to *callbackfn* may cause the **this** value to become detached.

This function is not generic. ValidateTypedArray is applied to the **this** value prior to evaluating the algorithm. If its result is an abrupt completion that exception is thrown instead of evaluating the algorithm.

22.2.3.13 %TypedArray%.prototype.includes (*searchElement* [, *fromIndex*])

%TypedArray%`.prototype.includes` is a distinct function that implements the same algorithm as `Array.prototype.includes` as defined in 22.1.3.13 except that the **this** object's [[ArrayLength]] internal slot is accessed in place of performing a [[Get]] of **"length"**. The implementation of the algorithm may be optimized with the knowledge that the **this** value is an object that has a fixed length and whose integer-indexed properties are not sparse. However, such optimization must not introduce any observable changes in the specified behaviour of the algorithm.

This function is not generic. ValidateTypedArray is applied to the **this** value prior to evaluating the algorithm. If its result is an abrupt completion that exception is thrown instead of evaluating the algorithm.

22.2.3.14 %TypedArray%.prototype.indexOf (*searchElement* [, *fromIndex*])

%TypedArray%`.prototype.indexOf` is a distinct function that implements the same algorithm as

`Array.prototype.indexOf` as defined in 22.1.3.14 except that the **this** object's [[ArrayLength]] internal slot is accessed in place of performing a [[Get]] of **"length"**. The implementation of the algorithm may be optimized with the knowledge that the **this** value is an object that has a fixed length and whose integer-indexed properties are not sparse. However, such optimization must not introduce any observable changes in the specified behaviour of the algorithm.

This function is not generic. ValidateTypedArray is applied to the **this** value prior to evaluating the algorithm. If its result is an abrupt completion that exception is thrown instead of evaluating the algorithm.

22.2.3.15 %TypedArray%.prototype.join (*separator*)

%TypedArray%**`.prototype.join`** is a distinct function that implements the same algorithm as **`Array.prototype.join`** as defined in 22.1.3.15 except that the **this** object's [[ArrayLength]] internal slot is accessed in place of performing a [[Get]] of **"length"**. The implementation of the algorithm may be optimized with the knowledge that the **this** value is an object that has a fixed length and whose integer-indexed properties are not sparse. However, such optimization must not introduce any observable changes in the specified behaviour of the algorithm.

This function is not generic. ValidateTypedArray is applied to the **this** value prior to evaluating the algorithm. If its result is an abrupt completion that exception is thrown instead of evaluating the algorithm.

22.2.3.16 %TypedArray%.prototype.keys ( )

The following steps are taken:

1. Let *O* be the **this** value.
2. Perform ? ValidateTypedArray(*O*).
3. Return CreateArrayIterator(*O*, key).

22.2.3.17 %TypedArray%.prototype.lastIndexOf (*searchElement* [, *fromIndex*])

%TypedArray%**`.prototype.lastIndexOf`** is a distinct function that implements the same algorithm as **`Array.prototype.lastIndexOf`** as defined in 22.1.3.17 except that the **this** object's [[ArrayLength]] internal slot is accessed in place of performing a [[Get]] of **"length"**. The implementation of the algorithm may be optimized with the knowledge that the **this** value is an object that has a fixed length and whose integer-indexed properties are not sparse. However, such optimization must not introduce any observable changes in the specified behaviour of the algorithm.

This function is not generic. ValidateTypedArray is applied to the **this** value prior to evaluating the algorithm. If its result is an abrupt completion that exception is thrown instead of evaluating the algorithm.

22.2.3.18 get %TypedArray%.prototype.length

%TypedArray%**`.prototype.length`** is an accessor property whose set accessor function is **undefined**. Its get accessor function performs the following steps:

1. Let *O* be the **this** value.
2. Perform ? RequireInternalSlot(*O*, [[TypedArrayName]]).
3. Assert: *O* has [[ViewedArrayBuffer]] and [[ArrayLength]] internal slots.
4. Let *buffer* be *O*.[[ViewedArrayBuffer]].
5. If IsDetachedBuffer(*buffer*) is **true**, return 0.

6. Let *length* be *O*.[[ArrayLength]].
7. Return *length*.

This function is not generic. The **this** value must be an object with a [[TypedArrayName]] internal slot.

22.2.3.19 %TypedArray%.prototype.map (*callbackfn* [, *thisArg*])

The interpretation and use of the arguments of %TypedArray%`.prototype.map` are the same as for `Array.prototype.map` as defined in 22.1.3.18.

When the `map` method is called with one or two arguments, the following steps are taken:

1. Let *O* be the **this** value.
2. Perform ? ValidateTypedArray(*O*).
3. Let *len* be *O*.[[ArrayLength]].
4. If IsCallable(*callbackfn*) is **false**, throw a **TypeError** exception.
5. Let *A* be ? TypedArraySpeciesCreate(*O*, « *len* »).
6. Let *k* be 0.
7. Repeat, while *k* < *len*
    a. Let *Pk* be ! ToString(*k*).
    b. Let *kValue* be ? Get(*O*, *Pk*).
    c. Let *mappedValue* be ? Call(*callbackfn*, *thisArg*, « *kValue*, *k*, *O* »).
    d. Perform ? Set(*A*, *Pk*, *mappedValue*, **true**).
    e. Set *k* to *k* + 1.
8. Return *A*.

This function is not generic. The **this** value must be an object with a [[TypedArrayName]] internal slot.

22.2.3.20 %TypedArray%.prototype.reduce (*callbackfn* [, *initialValue*])

%TypedArray%`.prototype.reduce` is a distinct function that implements the same algorithm as `Array.prototype.reduce` as defined in 22.1.3.21 except that the **this** object's [[ArrayLength]] internal slot is accessed in place of performing a [[Get]] of **"length"**. The implementation of the algorithm may be optimized with the knowledge that the **this** value is an object that has a fixed length and whose integer-indexed properties are not sparse. However, such optimization must not introduce any observable changes in the specified behaviour of the algorithm and must take into account the possibility that calls to *callbackfn* may cause the **this** value to become detached.

This function is not generic. ValidateTypedArray is applied to the **this** value prior to evaluating the algorithm. If its result is an abrupt completion that exception is thrown instead of evaluating the algorithm.

22.2.3.21 %TypedArray%.prototype.reduceRight (*callbackfn* [, *initialValue*])

%TypedArray%`.prototype.reduceRight` is a distinct function that implements the same algorithm as `Array.prototype.reduceRight` as defined in 22.1.3.22 except that the **this** object's [[ArrayLength]] internal slot is accessed in place of performing a [[Get]] of **"length"**. The implementation of the algorithm may be optimized with the knowledge that the **this** value is an object that has a fixed length and whose integer-indexed properties are not sparse. However, such optimization must not introduce any observable changes in the specified behaviour of the algorithm and must take into account the possibility that calls to *callbackfn* may cause the **this** value to become detached.

This function is not generic. ValidateTypedArray is applied to the **this** value prior to evaluating the algorithm. If its result is an abrupt completion that exception is thrown instead of evaluating the algorithm.

22.2.3.22 %TypedArray%.prototype.reverse ( )

%TypedArray%`.prototype.reverse` is a distinct function that implements the same algorithm as `Array.prototype.reverse` as defined in 22.1.3.23 except that the **this** object's [[ArrayLength]] internal slot is accessed in place of performing a [[Get]] of **"length"**. The implementation of the algorithm may be optimized with the knowledge that the **this** value is an object that has a fixed length and whose integer-indexed properties are not sparse. However, such optimization must not introduce any observable changes in the specified behaviour of the algorithm.

This function is not generic. ValidateTypedArray is applied to the **this** value prior to evaluating the algorithm. If its result is an abrupt completion that exception is thrown instead of evaluating the algorithm.

22.2.3.23 %TypedArray%.prototype.set (*overloaded* [, *offset*])

%TypedArray%`.prototype.set` is a single function whose behaviour is overloaded based upon the type of its first argument.

This function is not generic. The **this** value must be an object with a [[TypedArrayName]] internal slot.

22.2.3.23.1 %TypedArray%.prototype.set (*array* [, *offset*])

Sets multiple values in this *TypedArray*, reading the values from the object *array*. The optional *offset* value indicates the first element index in this *TypedArray* where values are written. If omitted, it is assumed to be 0.

1. Assert: *array* is any ECMAScript language value other than an Object with a [[TypedArrayName]] internal slot. If it is such an Object, the definition in 22.2.3.23.2 applies.
2. Let *target* be the **this** value.
3. Perform ? RequireInternalSlot(*target*, [[TypedArrayName]]).
4. Assert: *target* has a [[ViewedArrayBuffer]] internal slot.
5. Let *targetOffset* be ? ToInteger(*offset*).
6. If *targetOffset* < 0, throw a **RangeError** exception.
7. Let *targetBuffer* be *target*.[[ViewedArrayBuffer]].
8. If IsDetachedBuffer(*targetBuffer*) is **true**, throw a **TypeError** exception.
9. Let *targetLength* be *target*.[[ArrayLength]].
10. Let *targetName* be the String value of *target*.[[TypedArrayName]].
11. Let *targetElementSize* be the Element Size value specified in Table 61 for *targetName*.
12. Let *targetType* be the Element Type value in Table 61 for *targetName*.
13. Let *targetByteOffset* be *target*.[[ByteOffset]].
14. Let *src* be ? ToObject(*array*).
15. Let *srcLength* be ? LengthOfArrayLike(*src*).
16. If *srcLength* + *targetOffset* > *targetLength*, throw a **RangeError** exception.
17. Let *targetByteIndex* be *targetOffset* × *targetElementSize* + *targetByteOffset*.
18. Let *k* be 0.
19. Let *limit* be *targetByteIndex* + *targetElementSize* × *srcLength*.
20. Repeat, while *targetByteIndex* < *limit*
    a. Let *Pk* be ! ToString(*k*).
    b. Let *value* be ? Get(*src*, *Pk*).

c. If *target*.[[ContentType]] is BigInt, set *value* to ? ToBigInt(*value*).
d. Otherwise, set *value* to ? ToNumber(*value*).
e. If IsDetachedBuffer(*targetBuffer*) is **true**, throw a **TypeError** exception.
f. Perform SetValueInBuffer(*targetBuffer*, *targetByteIndex*, *targetType*, *value*, **true**, Unordered).
g. Set *k* to *k* + 1.
h. Set *targetByteIndex* to *targetByteIndex* + *targetElementSize*.

21. Return **undefined**.

22.2.3.23.2 %TypedArray%.prototype.set (*typedArray* [, *offset*])

Sets multiple values in this *TypedArray*, reading the values from the *typedArray* argument object. The optional *offset* value indicates the first element index in this *TypedArray* where values are written. If omitted, it is assumed to be 0.

1. Assert: *typedArray* has a [[TypedArrayName]] internal slot. If it does not, the definition in 22.2.3.23.1 applies.
2. Let *target* be the **this** value.
3. Perform ? RequireInternalSlot(*target*, [[TypedArrayName]]).
4. Assert: *target* has a [[ViewedArrayBuffer]] internal slot.
5. Let *targetOffset* be ? ToInteger(*offset*).
6. If *targetOffset* < 0, throw a **RangeError** exception.
7. Let *targetBuffer* be *target*.[[ViewedArrayBuffer]].
8. If IsDetachedBuffer(*targetBuffer*) is **true**, throw a **TypeError** exception.
9. Let *targetLength* be *target*.[[ArrayLength]].
10. Let *srcBuffer* be *typedArray*.[[ViewedArrayBuffer]].
11. If IsDetachedBuffer(*srcBuffer*) is **true**, throw a **TypeError** exception.
12. Let *targetName* be the String value of *target*.[[TypedArrayName]].
13. Let *targetType* be the Element Type value in Table 61 for *targetName*.
14. Let *targetElementSize* be the Element Size value specified in Table 61 for *targetName*.
15. Let *targetByteOffset* be *target*.[[ByteOffset]].
16. Let *srcName* be the String value of *typedArray*.[[TypedArrayName]].
17. Let *srcType* be the Element Type value in Table 61 for *srcName*.
18. Let *srcElementSize* be the Element Size value specified in Table 61 for *srcName*.
19. Let *srcLength* be *typedArray*.[[ArrayLength]].
20. Let *srcByteOffset* be *typedArray*.[[ByteOffset]].
21. If *srcLength* + *targetOffset* > *targetLength*, throw a **RangeError** exception.
22. If *target*.[[ContentType]] is not equal to *typedArray*.[[ContentType]], throw a **TypeError** exception.
23. If both IsSharedArrayBuffer(*srcBuffer*) and IsSharedArrayBuffer(*targetBuffer*) are **true**, then
    a. If *srcBuffer*.[[ArrayBufferData]] and *targetBuffer*.[[ArrayBufferData]] are the same Shared Data Block values, let *same* be **true**; else let *same* be **false**.
24. Else, let *same* be SameValue(*srcBuffer*, *targetBuffer*).
25. If *same* is **true**, then
    a. Let *srcByteLength* be *typedArray*.[[ByteLength]].
    b. Set *srcBuffer* to ? CloneArrayBuffer(*srcBuffer*, *srcByteOffset*, *srcByteLength*, %ArrayBuffer%).
    c. NOTE: %ArrayBuffer% is used to clone *srcBuffer* because is it known to not have any observable side-effects.
    d. Let *srcByteIndex* be 0.
26. Else, let *srcByteIndex* be *srcByteOffset*.
27. Let *targetByteIndex* be *targetOffset* × *targetElementSize* + *targetByteOffset*.
28. Let *limit* be *targetByteIndex* + *targetElementSize* × *srcLength*.

29. If *srcType* is the same as *targetType*, then
    a. NOTE: If *srcType* and *targetType* are the same, the transfer must be performed in a manner that preserves the bit-level encoding of the source data.
    b. Repeat, while *targetByteIndex* < *limit*
        i. Let *value* be GetValueFromBuffer(*srcBuffer*, *srcByteIndex*, Uint8, **true**, Unordered).
        ii. Perform SetValueInBuffer(*targetBuffer*, *targetByteIndex*, Uint8, *value*, **true**, Unordered).
        iii. Set *srcByteIndex* to *srcByteIndex* + 1.
        iv. Set *targetByteIndex* to *targetByteIndex* + 1.
30. Else,
    a. Repeat, while *targetByteIndex* < *limit*
        i. Let *value* be GetValueFromBuffer(*srcBuffer*, *srcByteIndex*, *srcType*, **true**, Unordered).
        ii. Perform SetValueInBuffer(*targetBuffer*, *targetByteIndex*, *targetType*, *value*, **true**, Unordered).
        iii. Set *srcByteIndex* to *srcByteIndex* + *srcElementSize*.
        iv. Set *targetByteIndex* to *targetByteIndex* + *targetElementSize*.
31. Return **undefined**.

22.2.3.24 %TypedArray%.prototype.slice (*start*, *end*)

The interpretation and use of the arguments of %TypedArray%`.prototype.slice` are the same as for `Array.prototype.slice` as defined in 22.1.3.25. The following steps are taken:

1. Let *O* be the **this** value.
2. Perform ? ValidateTypedArray(*O*).
3. Let *len* be *O*.[[ArrayLength]].
4. Let *relativeStart* be ? ToInteger(*start*).
5. If *relativeStart* < 0, let *k* be max((*len* + *relativeStart*), 0); else let *k* be min(*relativeStart*, *len*).
6. If *end* is **undefined**, let *relativeEnd* be *len*; else let *relativeEnd* be ? ToInteger(*end*).
7. If *relativeEnd* < 0, let *final* be max((*len* + *relativeEnd*), 0); else let *final* be min(*relativeEnd*, *len*).
8. Let *count* be max(*final* - *k*, 0).
9. Let *A* be ? TypedArraySpeciesCreate(*O*, « *count* »).
10. Let *srcName* be the String value of *O*.[[TypedArrayName]].
11. Let *srcType* be the Element Type value in Table 61 for *srcName*.
12. Let *targetName* be the String value of *A*.[[TypedArrayName]].
13. Let *targetType* be the Element Type value in Table 61 for *targetName*.
14. If *srcType* is different from *targetType*, then
    a. Let *n* be 0.
    b. Repeat, while *k* < *final*
        i. Let *Pk* be ! ToString(*k*).
        ii. Let *kValue* be ? Get(*O*, *Pk*).
        iii. Perform ! Set(*A*, ! ToString(*n*), *kValue*, **true**).
        iv. Set *k* to *k* + 1.
        v. Set *n* to *n* + 1.
15. Else if *count* > 0, then
    a. Let *srcBuffer* be *O*.[[ViewedArrayBuffer]].
    b. If IsDetachedBuffer(*srcBuffer*) is **true**, throw a **TypeError** exception.
    c. Let *targetBuffer* be *A*.[[ViewedArrayBuffer]].
    d. Let *elementSize* be the Element Size value specified in Table 61 for Element Type *srcType*.
    e. NOTE: If *srcType* and *targetType* are the same, the transfer must be performed in a manner that preserves

the bit-level encoding of the source data.

f. Let *srcByteOffet* be *O*.[[ByteOffset]].
g. Let *targetByteIndex* be *A*.[[ByteOffset]].
h. Let *srcByteIndex* be (*k* × *elementSize*) + *srcByteOffet*.
i. Let *limit* be *targetByteIndex* + *count* × *elementSize*.
j. Repeat, while *targetByteIndex* < *limit*
    i. Let *value* be GetValueFromBuffer(*srcBuffer*, *srcByteIndex*, Uint8, **true**, Unordered).
    ii. Perform SetValueInBuffer(*targetBuffer*, *targetByteIndex*, Uint8, *value*, **true**, Unordered).
    iii. Set *srcByteIndex* to *srcByteIndex* + 1.
    iv. Set *targetByteIndex* to *targetByteIndex* + 1.

16. Return *A*.

This function is not generic. The **this** value must be an object with a [[TypedArrayName]] internal slot.

22.2.3.25 %TypedArray%.prototype.some (*callbackfn* [, *thisArg*])

%TypedArray%`.prototype.some` is a distinct function that implements the same algorithm as `Array.prototype.some` as defined in 22.1.3.26 except that the **this** object's [[ArrayLength]] internal slot is accessed in place of performing a [[Get]] of **"length"**. The implementation of the algorithm may be optimized with the knowledge that the **this** value is an object that has a fixed length and whose integer-indexed properties are not sparse. However, such optimization must not introduce any observable changes in the specified behaviour of the algorithm and must take into account the possibility that calls to *callbackfn* may cause the **this** value to become detached.

This function is not generic. ValidateTypedArray is applied to the **this** value prior to evaluating the algorithm. If its result is an abrupt completion that exception is thrown instead of evaluating the algorithm.

22.2.3.26 %TypedArray%.prototype.sort (*comparefn*)

%TypedArray%`.prototype.sort` is a distinct function that, except as described below, implements the same requirements as those of `Array.prototype.sort` as defined in 22.1.3.27. The implementation of the %TypedArray%`.prototype.sort` specification may be optimized with the knowledge that the **this** value is an object that has a fixed length and whose integer-indexed properties are not sparse. The only internal methods of the **this** object that the algorithm may call are [[Get]] and [[Set]].

This function is not generic. The **this** value must be an object with a [[TypedArrayName]] internal slot.

Upon entry, the following steps are performed to initialize evaluation of the `sort` function. These steps are used instead of the entry steps in 22.1.3.27:

1. If *comparefn* is not **undefined** and IsCallable(*comparefn*) is **false**, throw a **TypeError** exception.
2. Let *obj* be the **this** value.
3. Let *buffer* be ? ValidateTypedArray(*obj*).
4. Let *len* be *obj*.[[ArrayLength]].

The implementation-defined sort order condition for exotic objects is not applied by %TypedArray%`.prototype.sort`.

The following version of SortCompare is used by %TypedArray%`.prototype.sort`. It performs a numeric comparison rather than the string comparison used in 22.1.3.27. SortCompare has access to the *comparefn* and *buffer* values of the current invocation of the `sort` method.

When the TypedArray SortCompare abstract operation is called with two arguments *x* and *y*, the following steps are taken:

1. Assert: Both Type(*x*) and Type(*y*) are Number or both are BigInt.
2. If *comparefn* is not **undefined**, then
   a. Let *v* be ? ToNumber(? Call(*comparefn*, **undefined**, « *x*, *y* »)).
   b. If IsDetachedBuffer(*buffer*) is **true**, throw a **TypeError** exception.
   c. If *v* is **NaN**, return **+0**.
   d. Return *v*.
3. If *x* and *y* are both **NaN**, return **+0**.
4. If *x* is **NaN**, return 1.
5. If *y* is **NaN**, return -1.
6. If *x* < *y*, return -1.
7. If *x* > *y*, return 1.
8. If *x* is **-0** and *y* is **+0**, return -1.
9. If *x* is **+0** and *y* is **-0**, return 1.
10. Return **+0**.

NOTE Because **NaN** always compares greater than any other value, **NaN** property values always sort to the end of the result when *comparefn* is not provided.

22.2.3.27 %TypedArray%.prototype.subarray (*begin*, *end*)

Returns a new *TypedArray* object whose element type is the same as this *TypedArray* and whose ArrayBuffer is the same as the ArrayBuffer of this *TypedArray*, referencing the elements at *begin*, inclusive, up to *end*, exclusive. If either *begin* or *end* is negative, it refers to an index from the end of the array, as opposed to from the beginning.

1. Let *O* be the **this** value.
2. Perform ? RequireInternalSlot(*O*, [[TypedArrayName]]).
3. Assert: *O* has a [[ViewedArrayBuffer]] internal slot.
4. Let *buffer* be *O*.[[ViewedArrayBuffer]].
5. Let *srcLength* be *O*.[[ArrayLength]].
6. Let *relativeBegin* be ? ToInteger(*begin*).
7. If *relativeBegin* < 0, let *beginIndex* be max((*srcLength* + *relativeBegin*), 0); else let *beginIndex* be min(*relativeBegin*, *srcLength*).
8. If *end* is **undefined**, let *relativeEnd* be *srcLength*; else let *relativeEnd* be ? ToInteger(*end*).
9. If *relativeEnd* < 0, let *endIndex* be max((*srcLength* + *relativeEnd*), 0); else let *endIndex* be min(*relativeEnd*, *srcLength*).
10. Let *newLength* be max(*endIndex* - *beginIndex*, 0).
11. Let *constructorName* be the String value of *O*.[[TypedArrayName]].
12. Let *elementSize* be the Element Size value specified in Table 61 for *constructorName*.
13. Let *srcByteOffset* be *O*.[[ByteOffset]].
14. Let *beginByteOffset* be *srcByteOffset* + *beginIndex* × *elementSize*.
15. Let *argumentsList* be « *buffer*, *beginByteOffset*, *newLength* ».
16. Return ? TypedArraySpeciesCreate(*O*, *argumentsList*).

This function is not generic. The **this** value must be an object with a [[TypedArrayName]] internal slot.

22.2.3.28 %TypedArray%.prototype.toLocaleString ([*reserved1* [, *reserved2*]])

%TypedArray%`.prototype.toLocaleString` is a distinct function that implements the same algorithm as `Array.prototype.toLocaleString` as defined in 22.1.3.29 except that the **this** object's [[ArrayLength]] internal slot is accessed in place of performing a [[Get]] of **"length"**. The implementation of the algorithm may be optimized with the knowledge that the **this** value is an object that has a fixed length and whose integer-indexed properties are not sparse. However, such optimization must not introduce any observable changes in the specified behaviour of the algorithm.

This function is not generic. ValidateTypedArray is applied to the **this** value prior to evaluating the algorithm. If its result is an abrupt completion that exception is thrown instead of evaluating the algorithm.

> NOTE If the ECMAScript implementation includes the ECMA-402 Internationalization API this function is based upon the algorithm for `Array.prototype.toLocaleString` that is in the ECMA-402 specification.

22.2.3.29 %TypedArray%.prototype.toString ( )

The initial value of the %TypedArray%`.prototype.toString` data property is the same built-in function object as the `Array.prototype.toString` method defined in 22.1.3.30.

22.2.3.30 %TypedArray%.prototype.values ( )

The following steps are taken:

1. Let *O* be the **this** value.
2. Perform ? ValidateTypedArray(*O*).
3. Return CreateArrayIterator(*O*, value).

22.2.3.31 %TypedArray%.prototype [@@iterator] ( )

The initial value of the @@iterator property is the same function object as the initial value of the %TypedArray%`.prototype.values` property.

22.2.3.32 get %TypedArray%.prototype [@@toStringTag]

%TypedArray%`.prototype[@@toStringTag]` is an accessor property whose set accessor function is **undefined**. Its get accessor function performs the following steps:

1. Let *O* be the **this** value.
2. If Type(*O*) is not Object, return **undefined**.
3. If *O* does not have a [[TypedArrayName]] internal slot, return **undefined**.
4. Let *name* be *O*.[[TypedArrayName]].
5. Assert: Type(*name*) is String.
6. Return *name*.

This property has the attributes { [[Enumerable]]: **false**, [[Configurable]]: **true** }.

The initial value of the **"name"** property of this function is **"get [Symbol.toStringTag]"**.

22.2.4 The *TypedArray* Constructors

Each *TypedArray* constructor:

- is an intrinsic object that has the structure described below, differing only in the name used as the constructor name instead of *TypedArray*, in Table 61.
- is a single function whose behaviour is overloaded based upon the number and types of its arguments. The actual behaviour of a call of *TypedArray* depends upon the number and kind of arguments that are passed to it.
- is not intended to be called as a function and will throw an exception when called in that manner.
- is designed to be subclassable. It may be used as the value of an `extends` clause of a class definition. Subclass constructors that intend to inherit the specified *TypedArray* behaviour must include a `super` call to the *TypedArray* constructor to create and initialize the subclass instance with the internal state necessary to support the %TypedArray%`.prototype` built-in methods.
- has a **"length"** property whose value is 3.

22.2.4.1 *TypedArray* ( )

This description applies only if the *TypedArray* function is called with no arguments.

1. If NewTarget is **undefined**, throw a **TypeError** exception.
2. Let *constructorName* be the String value of the Constructor Name value specified in Table 61 for this *TypedArray* constructor.
3. Return ? AllocateTypedArray(*constructorName*, NewTarget, **"%*TypedArray*.prototype%"**, 0).

22.2.4.2 *TypedArray* (*length*)

This description applies only if the *TypedArray* function is called with at least one argument and the Type of the first argument is not Object.

TypedArray called with argument *length* performs the following steps:

1. Assert: Type(*length*) is not Object.
2. If NewTarget is **undefined**, throw a **TypeError** exception.
3. Let *elementLength* be ? ToIndex(*length*).
4. Let *constructorName* be the String value of the Constructor Name value specified in Table 61 for this *TypedArray* constructor.
5. Return ? AllocateTypedArray(*constructorName*, NewTarget, **"%*TypedArray*.prototype%"**, *elementLength*).

22.2.4.2.1 Runtime Semantics: AllocateTypedArray (*constructorName*, *newTarget*, *defaultProto* [, *length*])

The abstract operation AllocateTypedArray with arguments *constructorName*, *newTarget*, *defaultProto* and optional argument *length* is used to validate and create an instance of a TypedArray constructor. *constructorName* is required to be the name of a TypedArray constructor in Table 61. If the *length* argument is passed, an ArrayBuffer of that length is also allocated and associated with the new TypedArray instance. AllocateTypedArray provides common semantics that is used by all of the *TypedArray* overloads. AllocateTypedArray performs the following steps:

1. Let *proto* be ? GetPrototypeFromConstructor(*newTarget*, *defaultProto*).
2. Let *obj* be ! IntegerIndexedObjectCreate(*proto*).
3. Assert: *obj*.[[ViewedArrayBuffer]] is **undefined**.

4. Set *obj*.[[TypedArrayName]] to *constructorName*.
5. If *constructorName* is **"BigInt64Array"** or **"BigUint64Array"**, set *obj*.[[ContentType]] to BigInt.
6. Otherwise, set *obj*.[[ContentType]] to Number.
7. If *length* is not present, then
    a. Set *obj*.[[ByteLength]] to 0.
    b. Set *obj*.[[ByteOffset]] to 0.
    c. Set *obj*.[[ArrayLength]] to 0.
8. Else,
    a. Perform ? AllocateTypedArrayBuffer(*obj*, *length*).
9. Return *obj*.

22.2.4.2.2 Runtime Semantics: AllocateTypedArrayBuffer (*O*, *length*)

The abstract operation AllocateTypedArrayBuffer with arguments *O* and *length* allocates and associates an ArrayBuffer with the TypedArray instance *O*. It performs the following steps:

1. Assert: *O* is an Object that has a [[ViewedArrayBuffer]] internal slot.
2. Assert: *O*.[[ViewedArrayBuffer]] is **undefined**.
3. Assert: ! IsNonNegativeInteger(*length*) is **true**.
4. Let *constructorName* be the String value of *O*.[[TypedArrayName]].
5. Let *elementSize* be the Element Size value specified in Table 61 for *constructorName*.
6. Let *byteLength* be *elementSize* × *length*.
7. Let *data* be ? AllocateArrayBuffer(%ArrayBuffer%, *byteLength*).
8. Set *O*.[[ViewedArrayBuffer]] to *data*.
9. Set *O*.[[ByteLength]] to *byteLength*.
10. Set *O*.[[ByteOffset]] to 0.
11. Set *O*.[[ArrayLength]] to *length*.
12. Return *O*.

22.2.4.3 *TypedArray* (*typedArray*)

This description applies only if the *TypedArray* function is called with at least one argument and the Type of the first argument is Object and that object has a [[TypedArrayName]] internal slot.

TypedArray called with argument *typedArray* performs the following steps:

1. Assert: Type(*typedArray*) is Object and *typedArray* has a [[TypedArrayName]] internal slot.
2. If NewTarget is **undefined**, throw a **TypeError** exception.
3. Let *constructorName* be the String value of the Constructor Name value specified in Table 61 for this *TypedArray* constructor.
4. Let *O* be ? AllocateTypedArray(*constructorName*, NewTarget, **"%*TypedArray*.prototype%"**).
5. Let *srcArray* be *typedArray*.
6. Let *srcData* be *srcArray*.[[ViewedArrayBuffer]].
7. If IsDetachedBuffer(*srcData*) is **true**, throw a **TypeError** exception.
8. Let *elementType* be the Element Type value in Table 61 for *constructorName*.
9. Let *elementLength* be *srcArray*.[[ArrayLength]].
10. Let *srcName* be the String value of *srcArray*.[[TypedArrayName]].
11. Let *srcType* be the Element Type value in Table 61 for *srcName*.
12. Let *srcElementSize* be the Element Size value specified in Table 61 for *srcName*.

13. Let *srcByteOffset* be *srcArray*.[[ByteOffset]].
14. Let *elementSize* be the Element Size value specified in Table 61 for *constructorName*.
15. Let *byteLength* be *elementSize* × *elementLength*.
16. If IsSharedArrayBuffer(*srcData*) is **false**, then
    a. Let *bufferConstructor* be ? SpeciesConstructor(*srcData*, %ArrayBuffer%).
17. Else,
    a. Let *bufferConstructor* be %ArrayBuffer%.
18. If *elementType* is the same as *srcType*, then
    a. Let *data* be ? CloneArrayBuffer(*srcData*, *srcByteOffset*, *byteLength*, *bufferConstructor*).
19. Else,
    a. Let *data* be ? AllocateArrayBuffer(*bufferConstructor*, *byteLength*).
    b. If IsDetachedBuffer(*srcData*) is **true**, throw a **TypeError** exception.
    c. If *srcArray*.[[ContentType]] is not equal to *O*.[[ContentType]], throw a **TypeError** exception.
    d. Let *srcByteIndex* be *srcByteOffset*.
    e. Let *targetByteIndex* be 0.
    f. Let *count* be *elementLength*.
    g. Repeat, while *count* > 0
        i. Let *value* be GetValueFromBuffer(*srcData*, *srcByteIndex*, *srcType*, **true**, Unordered).
        ii. Perform SetValueInBuffer(*data*, *targetByteIndex*, *elementType*, *value*, **true**, Unordered).
        iii. Set *srcByteIndex* to *srcByteIndex* + *srcElementSize*.
        iv. Set *targetByteIndex* to *targetByteIndex* + *elementSize*.
        v. Set *count* to *count* - 1.
20. Set *O*.[[ViewedArrayBuffer]] to *data*.
21. Set *O*.[[ByteLength]] to *byteLength*.
22. Set *O*.[[ByteOffset]] to 0.
23. Set *O*.[[ArrayLength]] to *elementLength*.
24. Return *O*.

22.2.4.4 *TypedArray* (*object*)

This description applies only if the *TypedArray* function is called with at least one argument and the Type of the first argument is Object and that object does not have either a [[TypedArrayName]] or an [[ArrayBufferData]] internal slot.

TypedArray called with argument *object* performs the following steps:

1. Assert: Type(*object*) is Object and *object* does not have either a [[TypedArrayName]] or an [[ArrayBufferData]] internal slot.
2. If NewTarget is **undefined**, throw a **TypeError** exception.
3. Let *constructorName* be the String value of the Constructor Name value specified in Table 61 for this *TypedArray* constructor.
4. Let *O* be ? AllocateTypedArray(*constructorName*, NewTarget, **"%*TypedArray*.prototype%"**).
5. Let *usingIterator* be ? GetMethod(*object*, @@iterator).
6. If *usingIterator* is not **undefined**, then
    a. Let *values* be ? IterableToList(*object*, *usingIterator*).
    b. Let *len* be the number of elements in *values*.
    c. Perform ? AllocateTypedArrayBuffer(*O*, *len*).
    d. Let *k* be 0.
    e. Repeat, while *k* < *len*

i. Let *Pk* be ! ToString(*k*).
ii. Let *kValue* be the first element of *values* and remove that element from *values*.
iii. Perform ? Set(*O*, *Pk*, *kValue*, **true**).
iv. Set *k* to *k* + 1.

f. Assert: *values* is now an empty List.
g. Return *O*.

7. NOTE: *object* is not an Iterable so assume it is already an array-like object.
8. Let *arrayLike* be *object*.
9. Let *len* be ? LengthOfArrayLike(*arrayLike*).
10. Perform ? AllocateTypedArrayBuffer(*O*, *len*).
11. Let *k* be 0.
12. Repeat, while *k* < *len*
    a. Let *Pk* be ! ToString(*k*).
    b. Let *kValue* be ? Get(*arrayLike*, *Pk*).
    c. Perform ? Set(*O*, *Pk*, *kValue*, **true**).
    d. Set *k* to *k* + 1.
13. Return *O*.

22.2.4.5 *TypedArray* (*buffer* [, *byteOffset* [, *length*]])

This description applies only if the *TypedArray* function is called with at least one argument and the Type of the first argument is Object and that object has an [[ArrayBufferData]] internal slot.

TypedArray called with at least one argument *buffer* performs the following steps:

1. Assert: Type(*buffer*) is Object and *buffer* has an [[ArrayBufferData]] internal slot.
2. If NewTarget is **undefined**, throw a **TypeError** exception.
3. Let *constructorName* be the String value of the Constructor Name value specified in Table 61 for this *TypedArray* constructor.
4. Let *O* be ? AllocateTypedArray(*constructorName*, NewTarget, **"%*TypedArray*.prototype%"**).
5. Let *elementSize* be the Element Size value specified in Table 61 for *constructorName*.
6. Let *offset* be ? ToIndex(*byteOffset*).
7. If *offset* modulo *elementSize* ≠ 0, throw a **RangeError** exception.
8. If *length* is not **undefined**, then
    a. Let *newLength* be ? ToIndex(*length*).
9. If IsDetachedBuffer(*buffer*) is **true**, throw a **TypeError** exception.
10. Let *bufferByteLength* be *buffer*.[[ArrayBufferByteLength]].
11. If *length* is **undefined**, then
    a. If *bufferByteLength* modulo *elementSize* ≠ 0, throw a **RangeError** exception.
    b. Let *newByteLength* be *bufferByteLength* - *offset*.
    c. If *newByteLength* < 0, throw a **RangeError** exception.
12. Else,
    a. Let *newByteLength* be *newLength* × *elementSize*.
    b. If *offset* + *newByteLength* > *bufferByteLength*, throw a **RangeError** exception.
13. Set *O*.[[ViewedArrayBuffer]] to *buffer*.
14. Set *O*.[[ByteLength]] to *newByteLength*.
15. Set *O*.[[ByteOffset]] to *offset*.
16. Set *O*.[[ArrayLength]] to *newByteLength* / *elementSize*.

17. Return *O*.

22.2.4.6 TypedArrayCreate (*constructor*, *argumentList*)

The abstract operation TypedArrayCreate with arguments *constructor* and *argumentList* is used to specify the creation of a new TypedArray object using a constructor function. It performs the following steps:

1. Let *newTypedArray* be ? Construct(*constructor*, *argumentList*).
2. Perform ? ValidateTypedArray(*newTypedArray*).
3. If *argumentList* is a List of a single Number, then
    a. If *newTypedArray*.[[ArrayLength]] < *argumentList*[0], throw a **TypeError** exception.
4. Return *newTypedArray*.

22.2.4.7 TypedArraySpeciesCreate (*exemplar*, *argumentList*)

The abstract operation TypedArraySpeciesCreate with arguments *exemplar* and *argumentList* is used to specify the creation of a new TypedArray object using a constructor function that is derived from *exemplar*. It performs the following steps:

1. Assert: *exemplar* is an Object that has [[TypedArrayName]] and [[ContentType]] internal slots.
2. Let *defaultConstructor* be the intrinsic object listed in column one of Table 61 for *exemplar*.[[TypedArrayName]].
3. Let *constructor* be ? SpeciesConstructor(*exemplar*, *defaultConstructor*).
4. Let *result* be ? TypedArrayCreate(*constructor*, *argumentList*).
5. Assert: *result* has [[TypedArrayName]] and [[ContentType]] internal slots.
6. If *result*.[[ContentType]] is not equal to *exemplar*.[[ContentType]], throw a **TypeError** exception.
7. Return *result*.

22.2.5 Properties of the *TypedArray* Constructors

Each *TypedArray* constructor:

- has a [[Prototype]] internal slot whose value is %TypedArray%.
- has a **"name"** property whose value is the String value of the constructor name specified for it in Table 61.
- has the following properties:

22.2.5.1 *TypedArray*.BYTES_PER_ELEMENT

The value of *TypedArray*`.BYTES_PER_ELEMENT` is the Element Size value specified in Table 61 for *TypedArray*.

This property has the attributes { [[Writable]]: **false**, [[Enumerable]]: **false**, [[Configurable]]: **false** }.

22.2.5.2 *TypedArray*.prototype

The initial value of *TypedArray*`.prototype` is the corresponding *TypedArray* prototype intrinsic object (22.2.6).

This property has the attributes { [[Writable]]: **false**, [[Enumerable]]: **false**, [[Configurable]]: **false** }.

22.2.6 Properties of the *TypedArray* Prototype Objects

Each *TypedArray* prototype object:

- has a [[Prototype]] internal slot whose value is %TypedArray.prototype%.
- is an ordinary object.
- does not have a [[ViewedArrayBuffer]] or any other of the internal slots that are specific to *TypedArray* instance objects.

22.2.6.1 *TypedArray*.prototype.BYTES_PER_ELEMENT

The value of *TypedArray*`.prototype.BYTES_PER_ELEMENT` is the Element Size value specified in Table 61 for *TypedArray*.

This property has the attributes { [[Writable]]: **false**, [[Enumerable]]: **false**, [[Configurable]]: **false** }.

22.2.6.2 *TypedArray*.prototype.constructor

The initial value of a *TypedArray*`.prototype.constructor` is the corresponding %TypedArray% intrinsic object.

22.2.7 Properties of *TypedArray* Instances

TypedArray instances are Integer-Indexed exotic objects. Each *TypedArray* instance inherits properties from the corresponding *TypedArray* prototype object. Each *TypedArray* instance has the following internal slots: [[TypedArrayName]], [[ViewedArrayBuffer]], [[ByteLength]], [[ByteOffset]], and [[ArrayLength]].

23 Keyed Collections

23.1 Map Objects

Map objects are collections of key/value pairs where both the keys and values may be arbitrary ECMAScript language values. A distinct key value may only occur in one key/value pair within the Map's collection. Distinct key values are discriminated using the SameValueZero comparison algorithm.

Map object must be implemented using either hash tables or other mechanisms that, on average, provide access times that are sublinear on the number of elements in the collection. The data structures used in this Map objects specification is only intended to describe the required observable semantics of Map objects. It is not intended to be a viable implementation model.

23.1.1 The Map Constructor

The Map constructor:

- is the intrinsic object *%Map%*.
- is the initial value of the **"Map"** property of the global object.
- creates and initializes a new Map object when called as a constructor.
- is not intended to be called as a function and will throw an exception when called in that manner.

- is designed to be subclassable. It may be used as the value in an **`extends`** clause of a class definition. Subclass constructors that intend to inherit the specified **`Map`** behaviour must include a **`super`** call to the **`Map`** constructor to create and initialize the subclass instance with the internal state necessary to support the **`Map.prototype`** built-in methods.

23.1.1.1 Map ([*iterable*])

When the **`Map`** function is called with optional argument *iterable*, the following steps are taken:

1. If NewTarget is **undefined**, throw a **TypeError** exception.
2. Let *map* be ? OrdinaryCreateFromConstructor(NewTarget, "%**Map.prototype**%", « [[MapData]] »).
3. Set *map*.[[MapData]] to a new empty List.
4. If *iterable* is either **undefined** or **null**, return *map*.
5. Let *adder* be ? Get(*map*, **"set"**).
6. Return ? AddEntriesFromIterable(*map*, *iterable*, *adder*).

> NOTE If the parameter *iterable* is present, it is expected to be an object that implements an @@iterator method that returns an iterator object that produces a two element array-like object whose first element is a value that will be used as a Map key and whose second element is the value to associate with that key.

23.1.1.2 AddEntriesFromIterable (*target*, *iterable*, *adder*)

The abstract operation AddEntriesFromIterable accepts a *target* object, an *iterable* of entries, and an *adder* function to be invoked, with *target* as the receiver.

1. If IsCallable(*adder*) is **false**, throw a **TypeError** exception.
2. Assert: *iterable* is present, and is neither **undefined** nor **null**.
3. Let *iteratorRecord* be ? GetIterator(*iterable*).
4. Repeat,
    a. Let *next* be ? IteratorStep(*iteratorRecord*).
    b. If *next* is **false**, return *target*.
    c. Let *nextItem* be ? IteratorValue(*next*).
    d. If Type(*nextItem*) is not Object, then
        i. Let *error* be ThrowCompletion(a newly created **TypeError** object).
        ii. Return ? IteratorClose(*iteratorRecord*, *error*).
    e. Let *k* be Get(*nextItem*, **"0"**).
    f. If *k* is an abrupt completion, return ? IteratorClose(*iteratorRecord*, *k*).
    g. Let *v* be Get(*nextItem*, **"1"**).
    h. If *v* is an abrupt completion, return ? IteratorClose(*iteratorRecord*, *v*).
    i. Let *status* be Call(*adder*, *target*, « *k*.[[Value]], *v*.[[Value]] »).
    j. If *status* is an abrupt completion, return ? IteratorClose(*iteratorRecord*, *status*).

> NOTE The parameter *iterable* is expected to be an object that implements an @@iterator method that returns an iterator object that produces a two element array-like object whose first element is a value that will be used as a Map key and whose second element is the value to associate with that key.

23.1.2 Properties of the Map Constructor

The Map constructor:

- has a [[Prototype]] internal slot whose value is %Function.prototype%.
- has the following properties:

23.1.2.1 Map.prototype

The initial value of **`Map.prototype`** is %Map.prototype%.

This property has the attributes { [[Writable]]: **false**, [[Enumerable]]: **false**, [[Configurable]]: **false** }.

23.1.2.2 get Map [@@species]

`Map[@@species]` is an accessor property whose set accessor function is **undefined**. Its get accessor function performs the following steps:

1. Return the **this** value.

The value of the **"name"** property of this function is **"get [Symbol.species]"**.

> NOTE Methods that create derived collection objects should call @@species to determine the constructor to use to create the derived objects. Subclass constructor may over-ride @@species to change the default constructor assignment.

23.1.3 Properties of the Map Prototype Object

The Map prototype object:

- is the intrinsic object *%MapPrototype%*.
- has a [[Prototype]] internal slot whose value is %Object.prototype%.
- is an ordinary object.
- does not have a [[MapData]] internal slot.

23.1.3.1 Map.prototype.clear ( )

The following steps are taken:

1. Let *M* be the **this** value.
2. Perform ? RequireInternalSlot(*M*, [[MapData]]).
3. Let *entries* be the List that is *M*.[[MapData]].
4. For each Record { [[Key]], [[Value]] } *p* that is an element of *entries*, do
    a. Set *p*.[[Key]] to empty.
    b. Set *p*.[[Value]] to empty.
5. Return **undefined**.

> NOTE The existing [[MapData]] List is preserved because there may be existing Map Iterator objects that are suspended midway through iterating over that List.

23.1.3.2 Map.prototype.constructor

The initial value of **`Map.prototype.constructor`** is %Map%.

23.1.3.3 Map.prototype.delete (*key*)

The following steps are taken:

1. Let *M* be the **this** value.
2. Perform ? RequireInternalSlot(*M*, [[MapData]]).
3. Let *entries* be the List that is *M*.[[MapData]].
4. For each Record { [[Key]], [[Value]] } *p* that is an element of *entries*, do
    a. If *p*.[[Key]] is not empty and SameValueZero(*p*.[[Key]], *key*) is **true**, then
        i. Set *p*.[[Key]] to empty.
        ii. Set *p*.[[Value]] to empty.
        iii. Return **true**.
5. Return **false**.

NOTE The value empty is used as a specification device to indicate that an entry has been deleted. Actual implementations may take other actions such as physically removing the entry from internal data structures.

23.1.3.4 Map.prototype.entries ( )

The following steps are taken:

1. Let *M* be the **this** value.
2. Return ? CreateMapIterator(*M*, key+value).

23.1.3.5 Map.prototype.forEach (*callbackfn* [, *thisArg*])

When the **`forEach`** method is called with one or two arguments, the following steps are taken:

1. Let *M* be the **this** value.
2. Perform ? RequireInternalSlot(*M*, [[MapData]]).
3. If IsCallable(*callbackfn*) is **false**, throw a **TypeError** exception.
4. Let *entries* be the List that is *M*.[[MapData]].
5. For each Record { [[Key]], [[Value]] } *e* that is an element of *entries*, in original key insertion order, do
    a. If *e*.[[Key]] is not empty, then
        i. Perform ? Call(*callbackfn*, *thisArg*, « *e*.[[Value]], *e*.[[Key]], *M* »).
6. Return **undefined**.

NOTE *callbackfn* should be a function that accepts three arguments. **`forEach`** calls *callbackfn* once for each key / value pair present in the map object, in key insertion order. *callbackfn* is called only for keys of the map which actually exist; it is not called for keys that have been deleted from the map.

If a *thisArg* parameter is provided, it will be used as the **this** value for each invocation of *callbackfn*. If it is not provided, **undefined** is used instead.

callbackfn is called with three arguments: the value of the item, the key of the item, and the Map object being traversed.

`forEach` does not directly mutate the object on which it is called but the object may be mutated by the calls to *callbackfn*. Each entry of a map's [[MapData]] is only visited once. New keys added after the call to **`forEach`** begins are visited. A key will be revisited if it is deleted after it has been visited and then re-added before the **`forEach`** call completes. Keys that are deleted after the call to **`forEach`** begins and before being visited are not visited unless the key is added again before the **`forEach`** call completes.

23.1.3.6 Map.prototype.get (*key*)

The following steps are taken:

1. Let *M* be the **this** value.
2. Perform ? RequireInternalSlot(*M*, [[MapData]]).
3. Let *entries* be the List that is *M*.[[MapData]].
4. For each Record { [[Key]], [[Value]] } *p* that is an element of *entries*, do
   a. If *p*.[[Key]] is not empty and SameValueZero(*p*.[[Key]], *key*) is **true**, return *p*.[[Value]].
5. Return **undefined**.

23.1.3.7 Map.prototype.has (*key*)

The following steps are taken:

1. Let *M* be the **this** value.
2. Perform ? RequireInternalSlot(*M*, [[MapData]]).
3. Let *entries* be the List that is *M*.[[MapData]].
4. For each Record { [[Key]], [[Value]] } *p* that is an element of *entries*, do
   a. If *p*.[[Key]] is not empty and SameValueZero(*p*.[[Key]], *key*) is **true**, return **true**.
5. Return **false**.

23.1.3.8 Map.prototype.keys ( )

The following steps are taken:

1. Let *M* be the **this** value.
2. Return ? CreateMapIterator(*M*, key).

23.1.3.9 Map.prototype.set (*key*, *value*)

The following steps are taken:

1. Let *M* be the **this** value.
2. Perform ? RequireInternalSlot(*M*, [[MapData]]).
3. Let *entries* be the List that is *M*.[[MapData]].
4. For each Record { [[Key]], [[Value]] } *p* that is an element of *entries*, do
    a. If *p*.[[Key]] is not empty and SameValueZero(*p*.[[Key]], *key*) is **true**, then
        i. Set *p*.[[Value]] to *value*.
        ii. Return *M*.
5. If *key* is **-0**, set *key* to **+0**.
6. Let *p* be the Record { [[Key]]: *key*, [[Value]]: *value* }.
7. Append *p* as the last element of *entries*.
8. Return *M*.

23.1.3.10 get Map.prototype.size

`Map.prototype.size` is an accessor property whose set accessor function is **undefined**. Its get accessor function performs the following steps:

1. Let *M* be the **this** value.
2. Perform ? RequireInternalSlot(*M*, [[MapData]]).
3. Let *entries* be the List that is *M*.[[MapData]].
4. Let *count* be 0.
5. For each Record { [[Key]], [[Value]] } *p* that is an element of *entries*, do
    a. If *p*.[[Key]] is not empty, set *count* to *count* + 1.
6. Return *count*.

23.1.3.11 Map.prototype.values ( )

The following steps are taken:

1. Let *M* be the **this** value.
2. Return ? CreateMapIterator(*M*, value).

23.1.3.12 Map.prototype [@@iterator] ( )

The initial value of the @@iterator property is the same function object as the initial value of the **"entries"** property.

23.1.3.13 Map.prototype [@@toStringTag]

The initial value of the @@toStringTag property is the String value **"Map"**.

This property has the attributes { [[Writable]]: **false**, [[Enumerable]]: **false**, [[Configurable]]: **true** }.

23.1.4 Properties of Map Instances

Map instances are ordinary objects that inherit properties from the Map prototype. Map instances also have a [[MapData]] internal slot.

23.1.5 Map Iterator Objects

A Map Iterator is an object, that represents a specific iteration over some specific Map instance object. There is not a named constructor for Map Iterator objects. Instead, map iterator objects are created by calling certain methods of Map instance objects.

23.1.5.1 CreateMapIterator (*map*, *kind*)

Several methods of Map objects return Iterator objects. The abstract operation CreateMapIterator with arguments *map* and *kind* is used to create such iterator objects. It performs the following steps:

1. Perform ? RequireInternalSlot(*map*, [[MapData]]).
2. Let *iterator* be OrdinaryObjectCreate(%MapIteratorPrototype%, « [[IteratedMap]], [[MapNextIndex]], [[MapIterationKind]] »).
3. Set *iterator*.[[IteratedMap]] to *map*.
4. Set *iterator*.[[MapNextIndex]] to 0.
5. Set *iterator*.[[MapIterationKind]] to *kind*.
6. Return *iterator*.

23.1.5.2 The %MapIteratorPrototype% Object

The *%MapIteratorPrototype%* object:

- has properties that are inherited by all Map Iterator Objects.
- is an ordinary object.
- has a [[Prototype]] internal slot whose value is %IteratorPrototype%.
- has the following properties:

23.1.5.2.1 %MapIteratorPrototype%.next ( )

1. Let *O* be the **this** value.
2. If Type(*O*) is not Object, throw a **TypeError** exception.
3. If *O* does not have all of the internal slots of a Map Iterator Instance (23.1.5.3), throw a **TypeError** exception.
4. Let *m* be *O*.[[IteratedMap]].
5. Let *index* be *O*.[[MapNextIndex]].
6. Let *itemKind* be *O*.[[MapIterationKind]].
7. If *m* is **undefined**, return CreateIterResultObject(**undefined**, **true**).
8. Assert: *m* has a [[MapData]] internal slot.
9. Let *entries* be the List that is *m*.[[MapData]].
10. Let *numEntries* be the number of elements of *entries*.
11. NOTE: *numEntries* must be redetermined each time this method is evaluated.
12. Repeat, while *index* is less than *numEntries*,
    a. Let *e* be the Record { [[Key]], [[Value]] } that is the value of *entries*[*index*].
    b. Set *index* to *index* + 1.
    c. Set *O*.[[MapNextIndex]] to *index*.
    d. If *e*.[[Key]] is not empty, then
        i. If *itemKind* is key, let *result* be *e*.[[Key]].
        ii. Else if *itemKind* is value, let *result* be *e*.[[Value]].
        iii. Else,

1. Assert: *itemKind* is key+value.
2. Let *result* be ! CreateArrayFromList(« *e*.[[Key]], *e*.[[Value]] »).

iv. Return CreateIterResultObject(*result*, **false**).

13. Set *O*.[[IteratedMap]] to **undefined**.
14. Return CreateIterResultObject(**undefined**, **true**).

23.1.5.2.2 %MapIteratorPrototype% [@@toStringTag]

The initial value of the @@toStringTag property is the String value **"Map Iterator"**.

This property has the attributes { [[Writable]]: **false**, [[Enumerable]]: **false**, [[Configurable]]: **true** }.

23.1.5.3 Properties of Map Iterator Instances

Map Iterator instances are ordinary objects that inherit properties from the %MapIteratorPrototype% intrinsic object. Map Iterator instances are initially created with the internal slots described in Table 62.

Table 62: Internal Slots of Map Iterator Instances

Internal Slot	Description
[[IteratedMap]]	The Map object that is being iterated.
[[MapNextIndex]]	The integer index of the next [[MapData]] element to be examined by this iterator.
[[MapIterationKind]]	A String value that identifies what is returned for each element of the iteration. The possible values are: key, value, key+value.

23.2 Set Objects

Set objects are collections of ECMAScript language values. A distinct value may only occur once as an element of a Set's collection. Distinct values are discriminated using the SameValueZero comparison algorithm.

Set objects must be implemented using either hash tables or other mechanisms that, on average, provide access times that are sublinear on the number of elements in the collection. The data structures used in this Set objects specification is only intended to describe the required observable semantics of Set objects. It is not intended to be a viable implementation model.

23.2.1 The Set Constructor

The Set constructor:

- is the intrinsic object *%Set%*.
- is the initial value of the **"Set"** property of the global object.
- creates and initializes a new Set object when called as a constructor.
- is not intended to be called as a function and will throw an exception when called in that manner.
- is designed to be subclassable. It may be used as the value in an `extends` clause of a class definition. Subclass constructors that intend to inherit the specified `Set` behaviour must include a `super` call to the `Set` constructor to create and initialize the subclass instance with the internal state necessary to support the `Set.prototype` built-in methods.

23.2.1.1 Set ([*iterable*])

When the **`Set`** function is called with optional argument *iterable*, the following steps are taken:

1. If NewTarget is **undefined**, throw a **TypeError** exception.
2. Let *set* be ? OrdinaryCreateFromConstructor(NewTarget, **"%Set.prototype%"**, « [[SetData]] »).
3. Set *set*.[[SetData]] to a new empty List.
4. If *iterable* is either **undefined** or **null**, return *set*.
5. Let *adder* be ? Get(*set*, **"add"**).
6. If IsCallable(*adder*) is **false**, throw a **TypeError** exception.
7. Let *iteratorRecord* be ? GetIterator(*iterable*).
8. Repeat,
    a. Let *next* be ? IteratorStep(*iteratorRecord*).
    b. If *next* is **false**, return *set*.
    c. Let *nextValue* be ? IteratorValue(*next*).
    d. Let *status* be Call(*adder*, *set*, « *nextValue* »).
    e. If *status* is an abrupt completion, return ? IteratorClose(*iteratorRecord*, *status*).

23.2.2 Properties of the Set Constructor

The Set constructor:

- has a [[Prototype]] internal slot whose value is %Function.prototype%.
- has the following properties:

23.2.2.1 Set.prototype

The initial value of **`Set.prototype`** is the intrinsic %SetPrototype% object.

This property has the attributes { [[Writable]]: **false**, [[Enumerable]]: **false**, [[Configurable]]: **false** }.

23.2.2.2 get Set [@@species]

`Set[@@species]` is an accessor property whose set accessor function is **undefined**. Its get accessor function performs the following steps:

1. Return the **this** value.

The value of the **"name"** property of this function is **"get [Symbol.species]"**.

> NOTE Methods that create derived collection objects should call @@species to determine the constructor to use to create the derived objects. Subclass constructor may over-ride @@species to change the default constructor assignment.

23.2.3 Properties of the Set Prototype Object

The Set prototype object:

- is the intrinsic object *%SetPrototype%*.

- has a [[Prototype]] internal slot whose value is %Object.prototype%.
- is an ordinary object.
- does not have a [[SetData]] internal slot.

23.2.3.1 Set.prototype.add (*value*)

The following steps are taken:

1. Let *S* be the **this** value.
2. Perform ? RequireInternalSlot(*S*, [[SetData]]).
3. Let *entries* be the List that is *S*.[[SetData]].
4. For each *e* that is an element of *entries*, do
    a. If *e* is not empty and SameValueZero(*e*, *value*) is **true**, then
        i. Return *S*.
5. If *value* is **-0**, set *value* to **+0**.
6. Append *value* as the last element of *entries*.
7. Return *S*.

23.2.3.2 Set.prototype.clear ( )

The following steps are taken:

1. Let *S* be the **this** value.
2. Perform ? RequireInternalSlot(*S*, [[SetData]]).
3. Let *entries* be the List that is *S*.[[SetData]].
4. For each *e* that is an element of *entries*, do
    a. Replace the element of *entries* whose value is *e* with an element whose value is empty.
5. Return **undefined**.

NOTE The existing [[SetData]] List is preserved because there may be existing Set Iterator objects that are suspended midway through iterating over that List.

23.2.3.3 Set.prototype.constructor

The initial value of `Set.prototype.constructor` is %Set%.

23.2.3.4 Set.prototype.delete (*value*)

The following steps are taken:

1. Let *S* be the **this** value.
2. Perform ? RequireInternalSlot(*S*, [[SetData]]).
3. Let *entries* be the List that is *S*.[[SetData]].
4. For each *e* that is an element of *entries*, do
    a. If *e* is not empty and SameValueZero(*e*, *value*) is **true**, then
        i. Replace the element of *entries* whose value is *e* with an element whose value is empty.
        ii. Return **true**.
5. Return **false**.

NOTE The value empty is used as a specification device to indicate that an entry has been deleted. Actual implementations may take other actions such as physically removing the entry from internal data structures.

23.2.3.5 Set.prototype.entries ( )

The following steps are taken:

1. Let *S* be the **this** value.
2. Return ? CreateSetIterator(*S*, key+value).

NOTE For iteration purposes, a Set appears similar to a Map where each entry has the same value for its key and value.

23.2.3.6 Set.prototype.forEach (*callbackfn* [, *thisArg*])

When the `forEach` method is called with one or two arguments, the following steps are taken:

1. Let *S* be the **this** value.
2. Perform ? RequireInternalSlot(*S*, [[SetData]]).
3. If IsCallable(*callbackfn*) is **false**, throw a **TypeError** exception.
4. Let *entries* be the List that is *S*.[[SetData]].
5. For each *e* that is an element of *entries*, in original insertion order, do
    a. If *e* is not empty, then
        i. Perform ? Call(*callbackfn*, *thisArg*, « *e*, *e*, *S* »).
6. Return **undefined**.

NOTE *callbackfn* should be a function that accepts three arguments. **`forEach`** calls *callbackfn* once for each value present in the set object, in value insertion order. *callbackfn* is called only for values of the Set which actually exist; it is not called for keys that have been deleted from the set.

If a *thisArg* parameter is provided, it will be used as the **this** value for each invocation of *callbackfn*. If it is not provided, **undefined** is used instead.

callbackfn is called with three arguments: the first two arguments are a value contained in the Set. The same value is passed for both arguments. The Set object being traversed is passed as the third argument.

The *callbackfn* is called with three arguments to be consistent with the call back functions used by **`forEach`** methods for Map and Array. For Sets, each item value is considered to be both the key and the value.

`forEach` does not directly mutate the object on which it is called but the object may be mutated by the calls to *callbackfn*.

Each value is normally visited only once. However, a value will be revisited if it is deleted after it has been visited and then re-added before the **`forEach`** call completes. Values that are deleted after the call to **`forEach`** begins and before being visited are not visited unless the value is added again before the **`forEach`** call completes. New values added after the call to **`forEach`** begins are visited.

23.2.3.7 Set.prototype.has (*value*)

The following steps are taken:

1. Let *S* be the **this** value.
2. Perform ? RequireInternalSlot(*S*, [[SetData]]).
3. Let *entries* be the List that is *S*.[[SetData]].
4. For each *e* that is an element of *entries*, do
    a. If *e* is not empty and SameValueZero(*e*, *value*) is **true**, return **true**.
5. Return **false**.

23.2.3.8 Set.prototype.keys ( )

The initial value of the **"keys"** property is the same function object as the initial value of the **"values"** property.

NOTE For iteration purposes, a Set appears similar to a Map where each entry has the same value for its key and value.

23.2.3.9 get Set.prototype.size

`Set.prototype.size` is an accessor property whose set accessor function is **undefined**. Its get accessor function performs the following steps:

1. Let *S* be the **this** value.

2. Perform ? RequireInternalSlot(*S*, [[SetData]]).
3. Let *entries* be the List that is *S*.[[SetData]].
4. Let *count* be 0.
5. For each *e* that is an element of *entries*, do
    a. If *e* is not empty, set *count* to *count* + 1.
6. Return *count*.

23.2.3.10 Set.prototype.values ( )

The following steps are taken:

1. Let *S* be the **this** value.
2. Return ? CreateSetIterator(*S*, value).

23.2.3.11 Set.prototype [@@iterator] ( )

The initial value of the @@iterator property is the same function object as the initial value of the **"values"** property.

23.2.3.12 Set.prototype [@@toStringTag]

The initial value of the @@toStringTag property is the String value **"Set"**.

This property has the attributes { [[Writable]]: **false**, [[Enumerable]]: **false**, [[Configurable]]: **true** }.

23.2.4 Properties of Set Instances

Set instances are ordinary objects that inherit properties from the Set prototype. Set instances also have a [[SetData]] internal slot.

23.2.5 Set Iterator Objects

A Set Iterator is an ordinary object, with the structure defined below, that represents a specific iteration over some specific Set instance object. There is not a named constructor for Set Iterator objects. Instead, set iterator objects are created by calling certain methods of Set instance objects.

23.2.5.1 CreateSetIterator (*set*, *kind*)

Several methods of Set objects return Iterator objects. The abstract operation CreateSetIterator with arguments *set* and *kind* is used to create such iterator objects. It performs the following steps:

1. Perform ? RequireInternalSlot(*set*, [[SetData]]).
2. Let *iterator* be OrdinaryObjectCreate(%SetIteratorPrototype%, « [[IteratedSet]], [[SetNextIndex]], [[SetIterationKind]] »).
3. Set *iterator*.[[IteratedSet]] to *set*.
4. Set *iterator*.[[SetNextIndex]] to 0.
5. Set *iterator*.[[SetIterationKind]] to *kind*.
6. Return *iterator*.

23.2.5.2 The %SetIteratorPrototype% Object

The *%SetIteratorPrototype%* object:

- has properties that are inherited by all Set Iterator Objects.
- is an ordinary object.
- has a [[Prototype]] internal slot whose value is %IteratorPrototype%.
- has the following properties:

23.2.5.2.1 %SetIteratorPrototype%.next ( )

1. Let *O* be the **this** value.
2. If Type(*O*) is not Object, throw a **TypeError** exception.
3. If *O* does not have all of the internal slots of a Set Iterator Instance (23.2.5.3), throw a **TypeError** exception.
4. Let *s* be *O*.[[IteratedSet]].
5. Let *index* be *O*.[[SetNextIndex]].
6. Let *itemKind* be *O*.[[SetIterationKind]].
7. If *s* is **undefined**, return CreateIterResultObject(**undefined**, **true**).
8. Assert: *s* has a [[SetData]] internal slot.
9. Let *entries* be the List that is *s*.[[SetData]].
10. Let *numEntries* be the number of elements of *entries*.
11. NOTE: *numEntries* must be redetermined each time this method is evaluated.
12. Repeat, while *index* is less than *numEntries*,
    a. Let *e* be *entries*[*index*].
    b. Set *index* to *index* + 1.
    c. Set *O*.[[SetNextIndex]] to *index*.
    d. If *e* is not empty, then
        i. If *itemKind* is key+value, then
            1. Return CreateIterResultObject(CreateArrayFromList(« *e*, *e* »), **false**).
        ii. Assert: *itemKind* is value.
        iii. Return CreateIterResultObject(*e*, **false**).
13. Set *O*.[[IteratedSet]] to **undefined**.
14. Return CreateIterResultObject(**undefined**, **true**).

23.2.5.2.2 %SetIteratorPrototype% [@@toStringTag]

The initial value of the @@toStringTag property is the String value **"Set Iterator"**.

This property has the attributes { [[Writable]]: **false**, [[Enumerable]]: **false**, [[Configurable]]: **true** }.

23.2.5.3 Properties of Set Iterator Instances

Set Iterator instances are ordinary objects that inherit properties from the %SetIteratorPrototype% intrinsic object. Set Iterator instances are initially created with the internal slots specified in Table 63.

Table 63: Internal Slots of Set Iterator Instances

Internal Slot	Description
[[IteratedSet]]	The Set object that is being iterated.
[[SetNextIndex]]	The integer index of the next [[SetData]] element to be examined by this iterator.
[[SetIterationKind]]	A String value that identifies what is returned for each element of the iteration. The possible values are value and key+value.

23.3 WeakMap Objects

WeakMap objects are collections of key/value pairs where the keys are objects and values may be arbitrary ECMAScript language values. A WeakMap may be queried to see if it contains a key/value pair with a specific key, but no mechanism is provided for enumerating the objects it holds as keys. If an object that is being used as the key of a WeakMap key/value pair is only reachable by following a chain of references that start within that WeakMap, then that key/value pair is inaccessible and is automatically removed from the WeakMap. WeakMap implementations must detect and remove such key/value pairs and any associated resources.

An implementation may impose an arbitrarily determined latency between the time a key/value pair of a WeakMap becomes inaccessible and the time when the key/value pair is removed from the WeakMap. If this latency was observable to ECMAScript program, it would be a source of indeterminacy that could impact program execution. For that reason, an ECMAScript implementation must not provide any means to observe a key of a WeakMap that does not require the observer to present the observed key.

WeakMap objects must be implemented using either hash tables or other mechanisms that, on average, provide access times that are sublinear on the number of key/value pairs in the collection. The data structure used in this WeakMap objects specification are only intended to describe the required observable semantics of WeakMap objects. It is not intended to be a viable implementation model.

NOTE WeakMap and WeakSets are intended to provide mechanisms for dynamically associating state with an object in a manner that does not "leak" memory resources if, in the absence of the WeakMap or WeakSet, the object otherwise became inaccessible and subject to resource reclamation by the implementation's garbage collection mechanisms. This characteristic can be achieved by using an inverted per-object mapping of weak map instances to keys. Alternatively each weak map may internally store its key to value mappings but this approach requires coordination between the WeakMap or WeakSet implementation and the garbage collector. The following references describe mechanism that may be useful to implementations of WeakMap and WeakSets:

Barry Hayes. 1997. Ephemerons: a new finalization mechanism. In *Proceedings of the 12th ACM SIGPLAN conference on Object-oriented programming, systems, languages, and applications (OOPSLA '97)*, A. Michael Berman (Ed.). ACM, New York, NY, USA, 176-183, http://doi.acm.org/10.1145/263698.263733.

Alexandra Barros, Roberto Ierusalimschy, Eliminating Cycles in Weak Tables. Journal of Universal Computer Science - J.UCS, vol. 14, no. 21, pp. 3481-3497, 2008, http://www.jucs.org/jucs_14_21/eliminating_cycles_in_weak

23.3.1 The WeakMap Constructor

The WeakMap constructor:

- is the intrinsic object *%WeakMap%*.
- is the initial value of the **"WeakMap"** property of the global object.
- creates and initializes a new WeakMap object when called as a constructor.
- is not intended to be called as a function and will throw an exception when called in that manner.
- is designed to be subclassable. It may be used as the value in an `extends` clause of a class definition. Subclass constructors that intend to inherit the specified `WeakMap` behaviour must include a `super` call to the `WeakMap` constructor to create and initialize the subclass instance with the internal state necessary to support the `WeakMap.prototype` built-in methods.

23.3.1.1 WeakMap ([*iterable*])

When the `WeakMap` function is called with optional argument *iterable*, the following steps are taken:

1. If NewTarget is **undefined**, throw a **TypeError** exception.
2. Let *map* be ? OrdinaryCreateFromConstructor(NewTarget, **"%WeakMap.prototype%"**, « [[WeakMapData]] »).
3. Set *map*.[[WeakMapData]] to a new empty List.
4. If *iterable* is either **undefined** or **null**, return *map*.
5. Let *adder* be ? Get(*map*, **"set"**).
6. Return ? AddEntriesFromIterable(*map*, *iterable*, *adder*).

NOTE If the parameter *iterable* is present, it is expected to be an object that implements an @@iterator method that returns an iterator object that produces a two element array-like object whose first element is a value that will be used as a WeakMap key and whose second element is the value to associate with that key.

23.3.2 Properties of the WeakMap Constructor

The WeakMap constructor:

- has a [[Prototype]] internal slot whose value is %Function.prototype%.
- has the following properties:

23.3.2.1 WeakMap.prototype

The initial value of **`WeakMap.prototype`** is %WeakMap.prototype%.

This property has the attributes { [[Writable]]: **false**, [[Enumerable]]: **false**, [[Configurable]]: **false** }.

23.3.3 Properties of the WeakMap Prototype Object

The WeakMap prototype object:

- is the intrinsic object *%WeakMapPrototype%*.
- has a [[Prototype]] internal slot whose value is %Object.prototype%.
- is an ordinary object.
- does not have a [[WeakMapData]] internal slot.

23.3.3.1 WeakMap.prototype.constructor

The initial value of **`WeakMap.prototype.constructor`** is %WeakMap%.

23.3.3.2 WeakMap.prototype.delete (*key*)

The following steps are taken:

1. Let *M* be the **this** value.
2. Perform ? RequireInternalSlot(*M*, [[WeakMapData]]).
3. Let *entries* be the List that is *M*.[[WeakMapData]].
4. If Type(*key*) is not Object, return **false**.
5. For each Record { [[Key]], [[Value]] } *p* that is an element of *entries*, do
    a. If *p*.[[Key]] is not empty and SameValue(*p*.[[Key]], *key*) is **true**, then
        i. Set *p*.[[Key]] to empty.
        ii. Set *p*.[[Value]] to empty.
        iii. Return **true**.
6. Return **false**.

NOTE The value empty is used as a specification device to indicate that an entry has been deleted. Actual implementations may take other actions such as physically removing the entry from internal data structures.

23.3.3.3 WeakMap.prototype.get (*key*)

The following steps are taken:

1. Let *M* be the **this** value.
2. Perform ? RequireInternalSlot(*M*, [[WeakMapData]]).
3. Let *entries* be the List that is *M*.[[WeakMapData]].
4. If Type(*key*) is not Object, return **undefined**.
5. For each Record { [[Key]], [[Value]] } *p* that is an element of *entries*, do
    a. If *p*.[[Key]] is not empty and SameValue(*p*.[[Key]], *key*) is **true**, return *p*.[[Value]].
6. Return **undefined**.

23.3.3.4 WeakMap.prototype.has (*key*)

The following steps are taken:

1. Let *M* be the **this** value.
2. Perform ? RequireInternalSlot(*M*, [[WeakMapData]]).
3. Let *entries* be the List that is *M*.[[WeakMapData]].
4. If Type(*key*) is not Object, return **false**.
5. For each Record { [[Key]], [[Value]] } *p* that is an element of *entries*, do
    a. If *p*.[[Key]] is not empty and SameValue(*p*.[[Key]], *key*) is **true**, return **true**.
6. Return **false**.

23.3.3.5 WeakMap.prototype.set (*key*, *value*)

The following steps are taken:

1. Let *M* be the **this** value.
2. Perform ? RequireInternalSlot(*M*, [[WeakMapData]]).
3. Let *entries* be the List that is *M*.[[WeakMapData]].
4. If Type(*key*) is not Object, throw a **TypeError** exception.
5. For each Record { [[Key]], [[Value]] } *p* that is an element of *entries*, do
    a. If *p*.[[Key]] is not empty and SameValue(*p*.[[Key]], *key*) is **true**, then
        i. Set *p*.[[Value]] to *value*.
        ii. Return *M*.
6. Let *p* be the Record { [[Key]]: *key*, [[Value]]: *value* }.
7. Append *p* as the last element of *entries*.
8. Return *M*.

23.3.3.6 WeakMap.prototype [@@toStringTag]

The initial value of the @@toStringTag property is the String value **"WeakMap"**.

This property has the attributes { [[Writable]]: **false**, [[Enumerable]]: **false**, [[Configurable]]: **true** }.

23.3.4 Properties of WeakMap Instances

WeakMap instances are ordinary objects that inherit properties from the WeakMap prototype. WeakMap instances also have a [[WeakMapData]] internal slot.

23.4 WeakSet Objects

WeakSet objects are collections of objects. A distinct object may only occur once as an element of a WeakSet's collection. A WeakSet may be queried to see if it contains a specific object, but no mechanism is provided for enumerating the objects it holds. If an object that is contained by a WeakSet is only reachable by following a chain of references that start within that WeakSet, then that object is inaccessible and is automatically removed from the WeakSet. WeakSet implementations must detect and remove such objects and any associated resources.

An implementation may impose an arbitrarily determined latency between the time an object contained in a WeakSet becomes inaccessible and the time when the object is removed from the WeakSet. If this latency was observable to ECMAScript program, it would be a source of indeterminacy that could impact program execution. For that reason, an ECMAScript implementation must not provide any means to determine if a WeakSet contains a particular object that does not require the observer to present the observed object.

WeakSet objects must be implemented using either hash tables or other mechanisms that, on average, provide access times that are sublinear on the number of elements in the collection. The data structure used in this WeakSet objects specification is only intended to describe the required observable semantics of WeakSet objects. It is not intended to be a viable implementation model.

NOTE See the NOTE in 23.3.

23.4.1 The WeakSet Constructor

The WeakSet constructor:

- is the intrinsic object *%WeakSet%*.
- is the initial value of the **"WeakSet"** property of the global object.
- creates and initializes a new WeakSet object when called as a constructor.
- is not intended to be called as a function and will throw an exception when called in that manner.
- is designed to be subclassable. It may be used as the value in an `extends` clause of a class definition. Subclass constructors that intend to inherit the specified `WeakSet` behaviour must include a `super` call to the `WeakSet` constructor to create and initialize the subclass instance with the internal state necessary to support the `WeakSet.prototype` built-in methods.

23.4.1.1 WeakSet ([*iterable*])

When the `WeakSet` function is called with optional argument *iterable*, the following steps are taken:

1. If NewTarget is **undefined**, throw a **TypeError** exception.
2. Let *set* be ? OrdinaryCreateFromConstructor(NewTarget, **"%WeakSet.prototype%"**, « [[WeakSetData]] »).
3. Set *set*.[[WeakSetData]] to a new empty List.
4. If *iterable* is either **undefined** or **null**, return *set*.
5. Let *adder* be ? Get(*set*, **"add"**).
6. If IsCallable(*adder*) is **false**, throw a **TypeError** exception.
7. Let *iteratorRecord* be ? GetIterator(*iterable*).
8. Repeat,
    a. Let *next* be ? IteratorStep(*iteratorRecord*).
    b. If *next* is **false**, return *set*.
    c. Let *nextValue* be ? IteratorValue(*next*).
    d. Let *status* be Call(*adder*, *set*, « *nextValue* »).

e. If *status* is an abrupt completion, return ? IteratorClose(*iteratorRecord*, *status*).

23.4.2 Properties of the WeakSet Constructor

The WeakSet constructor:

- has a [[Prototype]] internal slot whose value is %Function.prototype%.
- has the following properties:

23.4.2.1 WeakSet.prototype

The initial value of **`WeakSet.prototype`** is the intrinsic %WeakSetPrototype% object.

This property has the attributes { [[Writable]]: **false**, [[Enumerable]]: **false**, [[Configurable]]: **false** }.

23.4.3 Properties of the WeakSet Prototype Object

The WeakSet prototype object:

- is the intrinsic object *%WeakSetPrototype%*.
- has a [[Prototype]] internal slot whose value is %Object.prototype%.
- is an ordinary object.
- does not have a [[WeakSetData]] internal slot.

23.4.3.1 WeakSet.prototype.add (*value*)

The following steps are taken:

1. Let *S* be the **this** value.
2. Perform ? RequireInternalSlot(*S*, [[WeakSetData]]).
3. If Type(*value*) is not Object, throw a **TypeError** exception.
4. Let *entries* be the List that is *S*.[[WeakSetData]].
5. For each *e* that is an element of *entries*, do
    a. If *e* is not empty and SameValue(*e*, *value*) is **true**, then
        i. Return *S*.
6. Append *value* as the last element of *entries*.
7. Return *S*.

23.4.3.2 WeakSet.prototype.constructor

The initial value of **`WeakSet.prototype.constructor`** is the %WeakSet% intrinsic object.

23.4.3.3 WeakSet.prototype.delete (*value*)

The following steps are taken:

1. Let *S* be the **this** value.
2. Perform ? RequireInternalSlot(*S*, [[WeakSetData]]).
3. If Type(*value*) is not Object, return **false**.

4. Let *entries* be the List that is *S*.[[WeakSetData]].
5. For each *e* that is an element of *entries*, do
    a. If *e* is not empty and SameValue(*e*, *value*) is **true**, then
        i. Replace the element of *entries* whose value is *e* with an element whose value is empty.
        ii. Return **true**.
6. Return **false**.

NOTE The value empty is used as a specification device to indicate that an entry has been deleted. Actual implementations may take other actions such as physically removing the entry from internal data structures.

23.4.3.4 WeakSet.prototype.has (*value*)

The following steps are taken:

1. Let *S* be the **this** value.
2. Perform ? RequireInternalSlot(*S*, [[WeakSetData]]).
3. Let *entries* be the List that is *S*.[[WeakSetData]].
4. If Type(*value*) is not Object, return **false**.
5. For each *e* that is an element of *entries*, do
    a. If *e* is not empty and SameValue(*e*, *value*) is **true**, return **true**.
6. Return **false**.

23.4.3.5 WeakSet.prototype [@@toStringTag]

The initial value of the @@toStringTag property is the String value **"WeakSet"**.

This property has the attributes { [[Writable]]: **false**, [[Enumerable]]: **false**, [[Configurable]]: **true** }.

23.4.4 Properties of WeakSet Instances

WeakSet instances are ordinary objects that inherit properties from the WeakSet prototype. WeakSet instances also have a [[WeakSetData]] internal slot.

24 Structured Data

24.1 ArrayBuffer Objects

24.1.1 Abstract Operations For ArrayBuffer Objects

24.1.1.1 AllocateArrayBuffer (*constructor*, *byteLength*)

The abstract operation AllocateArrayBuffer with arguments *constructor* and *byteLength* is used to create an ArrayBuffer object. It performs the following steps:

1. Let *obj* be ? OrdinaryCreateFromConstructor(*constructor*, "%**ArrayBuffer.prototype**%", « [[ArrayBufferData]], [[ArrayBufferByteLength]], [[ArrayBufferDetachKey]] »).
2. Assert: ! IsNonNegativeInteger(*byteLength*) is **true**.
3. Let *block* be ? CreateByteDataBlock(*byteLength*).
4. Set *obj*.[[ArrayBufferData]] to *block*.
5. Set *obj*.[[ArrayBufferByteLength]] to *byteLength*.
6. Return *obj*.

24.1.1.2 IsDetachedBuffer (*arrayBuffer*)

The abstract operation IsDetachedBuffer with argument *arrayBuffer* performs the following steps:

1. Assert: Type(*arrayBuffer*) is Object and it has an [[ArrayBufferData]] internal slot.
2. If *arrayBuffer*.[[ArrayBufferData]] is **null**, return **true**.
3. Return **false**.

24.1.1.3 DetachArrayBuffer (*arrayBuffer* [, *key*])

The abstract operation DetachArrayBuffer with argument *arrayBuffer* and optional argument *key* performs the following steps:

1. Assert: Type(*arrayBuffer*) is Object and it has [[ArrayBufferData]], [[ArrayBufferByteLength]], and [[ArrayBufferDetachKey]] internal slots.
2. Assert: IsSharedArrayBuffer(*arrayBuffer*) is **false**.
3. If *key* is not present, set *key* to **undefined**.
4. If SameValue(*arrayBuffer*.[[ArrayBufferDetachKey]], *key*) is **false**, throw a **TypeError** exception.
5. Set *arrayBuffer*.[[ArrayBufferData]] to **null**.
6. Set *arrayBuffer*.[[ArrayBufferByteLength]] to 0.
7. Return NormalCompletion(**null**).

> NOTE Detaching an ArrayBuffer instance disassociates the Data Block used as its backing store from the instance and sets the byte length of the buffer to 0. No operations defined by this specification use the DetachArrayBuffer abstract operation. However, an ECMAScript implementation or host environment may define such operations.

24.1.1.4 CloneArrayBuffer (*srcBuffer*, *srcByteOffset*, *srcLength*, *cloneConstructor*)

The abstract operation CloneArrayBuffer takes four parameters, an ArrayBuffer *srcBuffer*, an integer offset *srcByteOffset*, an integer length *srcLength*, and a constructor function *cloneConstructor*. It creates a new ArrayBuffer whose data is a copy of *srcBuffer*'s data over the range starting at *srcByteOffset* and continuing for *srcLength* bytes. This operation performs the following steps:

1. Assert: Type(*srcBuffer*) is Object and it has an [[ArrayBufferData]] internal slot.
2. Assert: IsConstructor(*cloneConstructor*) is **true**.
3. Let *targetBuffer* be ? AllocateArrayBuffer(*cloneConstructor*, *srcLength*).
4. If IsDetachedBuffer(*srcBuffer*) is **true**, throw a **TypeError** exception.
5. Let *srcBlock* be *srcBuffer*.[[ArrayBufferData]].
6. Let *targetBlock* be *targetBuffer*.[[ArrayBufferData]].

7. Perform CopyDataBlockBytes(*targetBlock*, 0, *srcBlock*, *srcByteOffset*, *srcLength*).
8. Return *targetBuffer*.

24.1.1.5 IsUnsignedElementType (*type*)

The abstract operation IsUnsignedElementType verifies if the argument *type* is an unsigned TypedArray element type. This operation performs the following steps:

1. If *type* is Uint8, Uint8C, Uint16, Uint32, or BigUint64, return **true**.
2. Return **false**.

24.1.1.6 IsUnclampedIntegerElementType (*type*)

The abstract operation IsUnclampedIntegerElementType verifies if the argument *type* is an Integer TypedArray element type not including Uint8C. This operation performs the following steps:

1. If *type* is Int8, Uint8, Int16, Uint16, Int32, or Uint32, return **true**.
2. Return **false**.

24.1.1.7 IsBigIntElementType (*type*)

The abstract operation IsBigIntElementType verifies if the argument *type* is a BigInt TypedArray element type. This operation performs the following steps:

1. If *type* is BigUint64 or BigInt64, return **true**.
2. Return **false**.

24.1.1.8 IsNoTearConfiguration (*type*, *order*)

The abstract operation IsNoTearConfiguration with arguments *type* and *order* performs the following steps:

1. If ! IsUnclampedIntegerElementType(*type*) is **true**, return **true**.
2. If ! IsBigIntElementType(*type*) is **true** and *order* is not Init or Unordered, return **true**.
3. Return **false**.

24.1.1.9 RawBytesToNumeric (*type*, *rawBytes*, *isLittleEndian*)

The abstract operation RawBytesToNumeric takes three parameters, a TypedArray element type *type*, a List *rawBytes*, and a Boolean *isLittleEndian*. This operation performs the following steps:

1. Let *elementSize* be the Element Size value specified in Table 61 for Element Type *type*.
2. If *isLittleEndian* is **false**, reverse the order of the elements of *rawBytes*.
3. If *type* is Float32, then
    a. Let *value* be the byte elements of *rawBytes* concatenated and interpreted as a little-endian bit string encoding of an IEEE 754-2019 binary32 value.
    b. If *value* is an IEEE 754-2019 binary32 NaN value, return the **NaN** Number value.
    c. Return the Number value that corresponds to *value*.
4. If *type* is Float64, then
    a. Let *value* be the byte elements of *rawBytes* concatenated and interpreted as a little-endian bit string encoding of an IEEE 754-2019 binary64 value.

b. If *value* is an IEEE 754-2019 binary64 NaN value, return the **NaN** Number value.
c. Return the Number value that corresponds to *value*.

5. If ! IsUnsignedElementType(*type*) is **true**, then
   a. Let *intValue* be the byte elements of *rawBytes* concatenated and interpreted as a bit string encoding of an unsigned little-endian binary number.
6. Else,
   a. Let *intValue* be the byte elements of *rawBytes* concatenated and interpreted as a bit string encoding of a binary little-endian 2's complement number of bit length *elementSize* × 8.
7. If ! IsBigIntElementType(*type*) is **true**, return the BigInt value that corresponds to *intValue*.
8. Otherwise, return the Number value that corresponds to *intValue*.

24.1.1.10 GetValueFromBuffer (*arrayBuffer*, *byteIndex*, *type*, *isTypedArray*, *order* [, *isLittleEndian*])

The abstract operation GetValueFromBuffer takes six parameters, an ArrayBuffer or SharedArrayBuffer *arrayBuffer*, an integer *byteIndex*, a TypedArray element type *type*, a Boolean *isTypedArray*, *order* which is one of (SeqCst, Unordered), and optionally a Boolean *isLittleEndian*. This operation performs the following steps:

1. Assert: IsDetachedBuffer(*arrayBuffer*) is **false**.
2. Assert: There are sufficient bytes in *arrayBuffer* starting at *byteIndex* to represent a value of *type*.
3. Assert: ! IsNonNegativeInteger(*byteIndex*) is **true**.
4. Let *block* be *arrayBuffer*.[[ArrayBufferData]].
5. Let *elementSize* be the Element Size value specified in Table 61 for Element Type *type*.
6. If IsSharedArrayBuffer(*arrayBuffer*) is **true**, then
   a. Let *execution* be the [[CandidateExecution]] field of the surrounding agent's Agent Record.
   b. Let *eventList* be the [[EventList]] field of the element in *execution*.[[EventsRecords]] whose [[AgentSignifier]] is AgentSignifier().
   c. If *isTypedArray* is **true** and IsNoTearConfiguration(*type*, *order*) is **true**, let *noTear* be **true**; otherwise let *noTear* be **false**.
   d. Let *rawValue* be a List of length *elementSize* of nondeterministically chosen byte values.
   e. NOTE: In implementations, *rawValue* is the result of a non-atomic or atomic read instruction on the underlying hardware. The nondeterminism is a semantic prescription of the memory model to describe observable behaviour of hardware with weak consistency.
   f. Let *readEvent* be ReadSharedMemory { [[Order]]: *order*, [[NoTear]]: *noTear*, [[Block]]: *block*, [[ByteIndex]]: *byteIndex*, [[ElementSize]]: *elementSize* }.
   g. Append *readEvent* to *eventList*.
   h. Append Chosen Value Record { [[Event]]: *readEvent*, [[ChosenValue]]: *rawValue* } to *execution*.[[ChosenValues]].
7. Else, let *rawValue* be a List of *elementSize* containing, in order, the *elementSize* sequence of bytes starting with *block*[*byteIndex*].
8. If *isLittleEndian* is not present, set *isLittleEndian* to the value of the [[LittleEndian]] field of the surrounding agent's Agent Record.
9. Return RawBytesToNumeric(*type*, *rawValue*, *isLittleEndian*).

24.1.1.11 NumericToRawBytes (*type*, *value*, *isLittleEndian*)

The abstract operation NumericToRawBytes takes three parameters, a TypedArray element type *type*, a BigInt or a Number *value*, and a Boolean *isLittleEndian*. This operation performs the following steps:

1. If *type* is Float32, then

a. Let *rawBytes* be a List containing the 4 bytes that are the result of converting *value* to IEEE 754-2019 binary32 format using roundTiesToEven mode. If *isLittleEndian* is **false**, the bytes are arranged in big endian order. Otherwise, the bytes are arranged in little endian order. If *value* is **NaN**, *rawBytes* may be set to any implementation chosen IEEE 754-2019 binary32 format Not-a-Number encoding. An implementation must always choose the same encoding for each implementation distinguishable **NaN** value.

2. Else if *type* is Float64, then
   a. Let *rawBytes* be a List containing the 8 bytes that are the IEEE 754-2019 binary64 format encoding of *value*. If *isLittleEndian* is **false**, the bytes are arranged in big endian order. Otherwise, the bytes are arranged in little endian order. If *value* is **NaN**, *rawBytes* may be set to any implementation chosen IEEE 754-2019 binary64 format Not-a-Number encoding. An implementation must always choose the same encoding for each implementation distinguishable **NaN** value.
3. Else,
   a. Let *n* be the Element Size value specified in Table 61 for Element Type *type*.
   b. Let *convOp* be the abstract operation named in the Conversion Operation column in Table 61 for Element Type *type*.
   c. Let *intValue* be *convOp*(*value*) treated as a mathematical value, whether the result is a BigInt or Number.
   d. If *intValue* $\geq 0_{\mathbb{R}}$, then
      i. Let *rawBytes* be a List containing the *n*-byte binary encoding of *intValue*. If *isLittleEndian* is **false**, the bytes are ordered in big endian order. Otherwise, the bytes are ordered in little endian order.
   e. Else,
      i. Let *rawBytes* be a List containing the *n*-byte binary 2's complement encoding of *intValue*. If *isLittleEndian* is **false**, the bytes are ordered in big endian order. Otherwise, the bytes are ordered in little endian order.
4. Return *rawBytes*.

24.1.1.12 SetValueInBuffer (*arrayBuffer*, *byteIndex*, *type*, *value*, *isTypedArray*, *order* [, *isLittleEndian*])

The abstract operation SetValueInBuffer takes seven parameters, an ArrayBuffer or SharedArrayBuffer *arrayBuffer*, an integer *byteIndex*, a TypedArray element type *type*, a Number or BigInt *value*, a Boolean *isTypedArray*, *order* which is one of (SeqCst, Unordered, Init), and optionally a Boolean *isLittleEndian*. This operation performs the following steps:

1. Assert: IsDetachedBuffer(*arrayBuffer*) is **false**.
2. Assert: There are sufficient bytes in *arrayBuffer* starting at *byteIndex* to represent a value of *type*.
3. Assert: ! IsNonNegativeInteger(*byteIndex*) is **true**.
4. Assert: Type(*value*) is BigInt if ! IsBigIntElementType(*type*) is **true**; otherwise, Type(*value*) is Number.
5. Let *block* be *arrayBuffer*.[[ArrayBufferData]].
6. Let *elementSize* be the Element Size value specified in Table 61 for Element Type *type*.
7. If *isLittleEndian* is not present, set *isLittleEndian* to the value of the [[LittleEndian]] field of the surrounding agent's Agent Record.
8. Let *rawBytes* be NumericToRawBytes(*type*, *value*, *isLittleEndian*).
9. If IsSharedArrayBuffer(*arrayBuffer*) is **true**, then
   a. Let *execution* be the [[CandidateExecution]] field of the surrounding agent's Agent Record.
   b. Let *eventList* be the [[EventList]] field of the element in *execution*.[[EventsRecords]] whose [[AgentSignifier]] is AgentSignifier().
   c. If *isTypedArray* is **true** and IsNoTearConfiguration(*type*, *order*) is **true**, let *noTear* be **true**; otherwise let *noTear* be **false**.
   d. Append WriteSharedMemory { [[Order]]: *order*, [[NoTear]]: *noTear*, [[Block]]: *block*, [[ByteIndex]]:

byteIndex, [[ElementSize]]: *elementSize*, [[Payload]]: *rawBytes* } to *eventList*.

10. Else, store the individual bytes of *rawBytes* into *block*, in order, starting at *block*[*byteIndex*].
11. Return NormalCompletion(**undefined**).

24.1.1.13 GetModifySetValueInBuffer (*arrayBuffer*, *byteIndex*, *type*, *value*, *op* [, *isLittleEndian*])

The abstract operation GetModifySetValueInBuffer takes six parameters, a SharedArrayBuffer *arrayBuffer*, a nonnegative integer *byteIndex*, a TypedArray element type *type*, a Number or BigInt *value*, a semantic function *op*, and optionally a Boolean *isLittleEndian*. This operation performs the following steps:

1. Assert: IsSharedArrayBuffer(*arrayBuffer*) is **true**.
2. Assert: There are sufficient bytes in *arrayBuffer* starting at *byteIndex* to represent a value of *type*.
3. Assert: ! IsNonNegativeInteger(*byteIndex*) is **true**.
4. Assert: Type(*value*) is BigInt if ! IsBigIntElementType(*type*) is **true**; otherwise, Type(*value*) is Number.
5. Let *block* be *arrayBuffer*.[[ArrayBufferData]].
6. Let *elementSize* be the Element Size value specified in Table 61 for Element Type *type*.
7. If *isLittleEndian* is not present, set *isLittleEndian* to the value of the [[LittleEndian]] field of the surrounding agent's Agent Record.
8. Let *rawBytes* be NumericToRawBytes(*type*, *value*, *isLittleEndian*).
9. Let *execution* be the [[CandidateExecution]] field of the surrounding agent's Agent Record.
10. Let *eventList* be the [[EventList]] field of the element in *execution*.[[EventsRecords]] whose [[AgentSignifier]] is AgentSignifier().
11. Let *rawBytesRead* be a List of length *elementSize* of nondeterministically chosen byte values.
12. NOTE: In implementations, *rawBytesRead* is the result of a load-link, of a load-exclusive, or of an operand of a read-modify-write instruction on the underlying hardware. The nondeterminism is a semantic prescription of the memory model to describe observable behaviour of hardware with weak consistency.
13. Let *rmwEvent* be ReadModifyWriteSharedMemory { [[Order]]: SeqCst, [[NoTear]]: **true**, [[Block]]: *block*, [[ByteIndex]]: *byteIndex*, [[ElementSize]]: *elementSize*, [[Payload]]: *rawBytes*, [[ModifyOp]]: *op* }.
14. Append *rmwEvent* to *eventList*.
15. Append Chosen Value Record { [[Event]]: *rmwEvent*, [[ChosenValue]]: *rawBytesRead* } to *execution*.[[ChosenValues]].
16. Return RawBytesToNumeric(*type*, *rawBytesRead*, *isLittleEndian*).

24.1.2 The ArrayBuffer Constructor

The ArrayBuffer constructor:

- is the intrinsic object *%ArrayBuffer%*.
- is the initial value of the **"ArrayBuffer"** property of the global object.
- creates and initializes a new ArrayBuffer object when called as a constructor.
- is not intended to be called as a function and will throw an exception when called in that manner.
- is designed to be subclassable. It may be used as the value of an `extends` clause of a class definition. Subclass constructors that intend to inherit the specified `ArrayBuffer` behaviour must include a `super` call to the `ArrayBuffer` constructor to create and initialize subclass instances with the internal state necessary to support the `ArrayBuffer.prototype` built-in methods.

24.1.2.1 ArrayBuffer (*length*)

When the **`ArrayBuffer`** function is called with argument *length*, the following steps are taken:

1. If NewTarget is **undefined**, throw a **TypeError** exception.
2. Let *byteLength* be ? ToIndex(*length*).
3. Return ? AllocateArrayBuffer(NewTarget, *byteLength*).

24.1.3 Properties of the ArrayBuffer Constructor

The ArrayBuffer constructor:

- has a [[Prototype]] internal slot whose value is %Function.prototype%.
- has the following properties:

24.1.3.1 ArrayBuffer.isView (*arg*)

The **`isView`** function takes one argument *arg*, and performs the following steps:

1. If Type(*arg*) is not Object, return **false**.
2. If *arg* has a [[ViewedArrayBuffer]] internal slot, return **true**.
3. Return **false**.

24.1.3.2 ArrayBuffer.prototype

The initial value of **`ArrayBuffer.prototype`** is %ArrayBuffer.prototype%.

This property has the attributes { [[Writable]]: **false**, [[Enumerable]]: **false**, [[Configurable]]: **false** }.

24.1.3.3 get ArrayBuffer [@@species]

`ArrayBuffer[@@species]` is an accessor property whose set accessor function is **undefined**. Its get accessor function performs the following steps:

1. Return the **this** value.

The value of the **"name"** property of this function is **"get [Symbol.species]"**.

> NOTE ArrayBuffer prototype methods normally use their **this** object's constructor to create a derived object. However, a subclass constructor may over-ride that default behaviour by redefining its @@species property.

24.1.4 Properties of the ArrayBuffer Prototype Object

The ArrayBuffer prototype object:

- is the intrinsic object *%ArrayBufferPrototype%*.
- has a [[Prototype]] internal slot whose value is %Object.prototype%.
- is an ordinary object.
- does not have an [[ArrayBufferData]] or [[ArrayBufferByteLength]] internal slot.

24.1.4.1 get ArrayBuffer.prototype.byteLength

`ArrayBuffer.prototype.byteLength` is an accessor property whose set accessor function is **undefined**. Its get accessor function performs the following steps:

1. Let *O* be the **this** value.
2. Perform ? RequireInternalSlot(*O*, [[ArrayBufferData]]).
3. If IsSharedArrayBuffer(*O*) is **true**, throw a **TypeError** exception.
4. If IsDetachedBuffer(*O*) is **true**, throw a **TypeError** exception.
5. Let *length* be *O*.[[ArrayBufferByteLength]].
6. Return *length*.

24.1.4.2 ArrayBuffer.prototype.constructor

The initial value of **`ArrayBuffer.prototype.constructor`** is %ArrayBuffer%.

24.1.4.3 ArrayBuffer.prototype.slice (*start*, *end*)

The following steps are taken:

1. Let *O* be the **this** value.
2. Perform ? RequireInternalSlot(*O*, [[ArrayBufferData]]).
3. If IsSharedArrayBuffer(*O*) is **true**, throw a **TypeError** exception.
4. If IsDetachedBuffer(*O*) is **true**, throw a **TypeError** exception.
5. Let *len* be *O*.[[ArrayBufferByteLength]].
6. Let *relativeStart* be ? ToInteger(*start*).
7. If *relativeStart* < 0, let *first* be max((*len* + *relativeStart*), 0); else let *first* be min(*relativeStart*, *len*).
8. If *end* is **undefined**, let *relativeEnd* be *len*; else let *relativeEnd* be ? ToInteger(*end*).
9. If *relativeEnd* < 0, let *final* be max((*len* + *relativeEnd*), 0); else let *final* be min(*relativeEnd*, *len*).
10. Let *newLen* be max(*final* - *first*, 0).
11. Let *ctor* be ? SpeciesConstructor(*O*, %ArrayBuffer%).
12. Let *new* be ? Construct(*ctor*, « *newLen* »).
13. Perform ? RequireInternalSlot(*new*, [[ArrayBufferData]]).
14. If IsSharedArrayBuffer(*new*) is **true**, throw a **TypeError** exception.
15. If IsDetachedBuffer(*new*) is **true**, throw a **TypeError** exception.
16. If SameValue(*new*, *O*) is **true**, throw a **TypeError** exception.
17. If *new*.[[ArrayBufferByteLength]] < *newLen*, throw a **TypeError** exception.
18. NOTE: Side-effects of the above steps may have detached *O*.
19. If IsDetachedBuffer(*O*) is **true**, throw a **TypeError** exception.
20. Let *fromBuf* be *O*.[[ArrayBufferData]].
21. Let *toBuf* be *new*.[[ArrayBufferData]].
22. Perform CopyDataBlockBytes(*toBuf*, 0, *fromBuf*, *first*, *newLen*).
23. Return *new*.

24.1.4.4 ArrayBuffer.prototype [@@toStringTag]

The initial value of the @@toStringTag property is the String value **"ArrayBuffer"**.

This property has the attributes { [[Writable]]: **false**, [[Enumerable]]: **false**, [[Configurable]]: **true** }.

24.1.5 Properties of ArrayBuffer Instances

ArrayBuffer instances inherit properties from the ArrayBuffer prototype object. ArrayBuffer instances each have an [[ArrayBufferData]] internal slot, an [[ArrayBufferByteLength]] internal slot, and an [[ArrayBufferDetachKey]] internal slot.

ArrayBuffer instances whose [[ArrayBufferData]] is **null** are considered to be detached and all operators to access or modify data contained in the ArrayBuffer instance will fail.

ArrayBuffer instances whose [[ArrayBufferDetachKey]] is set to a value other than **undefined** need to have all DetachArrayBuffer calls passing that same "detach key" as an argument, otherwise a TypeError will result. This internal slot is only ever set by certain embedding environments, not by algorithms in this specification.

24.2 SharedArrayBuffer Objects

24.2.1 Abstract Operations for SharedArrayBuffer Objects

24.2.1.1 AllocateSharedArrayBuffer (*constructor*, *byteLength*)

The abstract operation AllocateSharedArrayBuffer with arguments *constructor* and *byteLength* is used to create a SharedArrayBuffer object. It performs the following steps:

1. Let *obj* be ? OrdinaryCreateFromConstructor(*constructor*, **"%SharedArrayBuffer.prototype%"**, « [[ArrayBufferData]], [[ArrayBufferByteLength]] »).
2. Assert: ! IsNonNegativeInteger(*byteLength*) is **true**.
3. Let *block* be ? CreateSharedByteDataBlock(*byteLength*).
4. Set *obj*.[[ArrayBufferData]] to *block*.
5. Set *obj*.[[ArrayBufferByteLength]] to *byteLength*.
6. Return *obj*.

24.2.1.2 IsSharedArrayBuffer (*obj*)

IsSharedArrayBuffer tests whether an object is an ArrayBuffer, a SharedArrayBuffer, or a subtype of either. It performs the following steps:

1. Assert: Type(*obj*) is Object and it has an [[ArrayBufferData]] internal slot.
2. Let *bufferData* be *obj*.[[ArrayBufferData]].
3. If *bufferData* is **null**, return **false**.
4. If *bufferData* is a Data Block, return **false**.
5. Assert: *bufferData* is a Shared Data Block.
6. Return **true**.

24.2.2 The SharedArrayBuffer Constructor

The SharedArrayBuffer constructor:

- is the intrinsic object *%SharedArrayBuffer%*.
- is the initial value of the **"SharedArrayBuffer"** property of the global object.

- creates and initializes a new SharedArrayBuffer object when called as a constructor.
- is not intended to be called as a function and will throw an exception when called in that manner.
- is designed to be subclassable. It may be used as the value of an **`extends`** clause of a class definition. Subclass constructors that intend to inherit the specified **`SharedArrayBuffer`** behaviour must include a **`super`** call to the **`SharedArrayBuffer`** constructor to create and initialize subclass instances with the internal state necessary to support the **`SharedArrayBuffer.prototype`** built-in methods.

> NOTE Unlike an **`ArrayBuffer`**, a **`SharedArrayBuffer`** cannot become detached, and its internal [[ArrayBufferData]] slot is never **null**.

24.2.2.1 SharedArrayBuffer ([*length*])

When the **`SharedArrayBuffer`** function is called with optional argument *length*, the following steps are taken:

1. If NewTarget is **undefined**, throw a **TypeError** exception.
2. Let *byteLength* be ? ToIndex(*length*).
3. Return ? AllocateSharedArrayBuffer(NewTarget, *byteLength*).

24.2.3 Properties of the SharedArrayBuffer Constructor

The SharedArrayBuffer constructor:

- has a [[Prototype]] internal slot whose value is %Function.prototype%.
- has the following properties:

24.2.3.1 SharedArrayBuffer.prototype

The initial value of **`SharedArrayBuffer.prototype`** is %SharedArrayBuffer.prototype%.

This property has the attributes { [[Writable]]: **false**, [[Enumerable]]: **false**, [[Configurable]]: **false** }.

24.2.3.2 get SharedArrayBuffer [@@species]

`SharedArrayBuffer[@@species]` is an accessor property whose set accessor function is **undefined**. Its get accessor function performs the following steps:

1. Return the **this** value.

The value of the **"name"** property of this function is **"get [Symbol.species]"**.

24.2.4 Properties of the SharedArrayBuffer Prototype Object

The SharedArrayBuffer prototype object:

- is the intrinsic object *%SharedArrayBufferPrototype%*.
- has a [[Prototype]] internal slot whose value is %Object.prototype%.
- is an ordinary object.
- does not have an [[ArrayBufferData]] or [[ArrayBufferByteLength]] internal slot.

24.2.4.1 get SharedArrayBuffer.prototype.byteLength

`SharedArrayBuffer.prototype.byteLength` is an accessor property whose set accessor function is **undefined**. Its get accessor function performs the following steps:

1. Let *O* be the **this** value.
2. Perform ? RequireInternalSlot(*O*, [[ArrayBufferData]]).
3. If IsSharedArrayBuffer(*O*) is **false**, throw a **TypeError** exception.
4. Let *length* be *O*.[[ArrayBufferByteLength]].
5. Return *length*.

24.2.4.2 SharedArrayBuffer.prototype.constructor

The initial value of **`SharedArrayBuffer.prototype.constructor`** is %SharedArrayBuffer%.

24.2.4.3 SharedArrayBuffer.prototype.slice (*start*, *end*)

The following steps are taken:

1. Let *O* be the **this** value.
2. Perform ? RequireInternalSlot(*O*, [[ArrayBufferData]]).
3. If IsSharedArrayBuffer(*O*) is **false**, throw a **TypeError** exception.
4. Let *len* be *O*.[[ArrayBufferByteLength]].
5. Let *relativeStart* be ? ToInteger(*start*).
6. If *relativeStart* < 0, let *first* be max((*len* + *relativeStart*), 0); else let *first* be min(*relativeStart*, *len*).
7. If *end* is **undefined**, let *relativeEnd* be *len*; else let *relativeEnd* be ? ToInteger(*end*).
8. If *relativeEnd* < 0, let *final* be max((*len* + *relativeEnd*), 0); else let *final* be min(*relativeEnd*, *len*).
9. Let *newLen* be max(*final* - *first*, 0).
10. Let *ctor* be ? SpeciesConstructor(*O*, %SharedArrayBuffer%).
11. Let *new* be ? Construct(*ctor*, « *newLen* »).
12. Perform ? RequireInternalSlot(*new*, [[ArrayBufferData]]).
13. If IsSharedArrayBuffer(*new*) is **false**, throw a **TypeError** exception.
14. If *new*.[[ArrayBufferData]] and *O*.[[ArrayBufferData]] are the same Shared Data Block values, throw a **TypeError** exception.
15. If *new*.[[ArrayBufferByteLength]] < *newLen*, throw a **TypeError** exception.
16. Let *fromBuf* be *O*.[[ArrayBufferData]].
17. Let *toBuf* be *new*.[[ArrayBufferData]].
18. Perform CopyDataBlockBytes(*toBuf*, 0, *fromBuf*, *first*, *newLen*).
19. Return *new*.

24.2.4.4 SharedArrayBuffer.prototype [@@toStringTag]

The initial value of the @@toStringTag property is the String value **"SharedArrayBuffer"**.

This property has the attributes { [[Writable]]: **false**, [[Enumerable]]: **false**, [[Configurable]]: **true** }.

24.2.5 Properties of SharedArrayBuffer Instances

SharedArrayBuffer instances inherit properties from the SharedArrayBuffer prototype object. SharedArrayBuffer

instances each have an [[ArrayBufferData]] internal slot and an [[ArrayBufferByteLength]] internal slot.

> NOTE SharedArrayBuffer instances, unlike ArrayBuffer instances, are never detached.

24.3 DataView Objects

24.3.1 Abstract Operations For DataView Objects

24.3.1.1 GetViewValue (*view*, *requestIndex*, *isLittleEndian*, *type*)

The abstract operation GetViewValue with arguments *view*, *requestIndex*, *isLittleEndian*, and *type* is used by functions on DataView instances to retrieve values from the view's buffer. It performs the following steps:

1. Perform ? RequireInternalSlot(*view*, [[DataView]]).
2. Assert: *view* has a [[ViewedArrayBuffer]] internal slot.
3. Let *getIndex* be ? ToIndex(*requestIndex*).
4. Set *isLittleEndian* to ! ToBoolean(*isLittleEndian*).
5. Let *buffer* be *view*.[[ViewedArrayBuffer]].
6. If IsDetachedBuffer(*buffer*) is **true**, throw a **TypeError** exception.
7. Let *viewOffset* be *view*.[[ByteOffset]].
8. Let *viewSize* be *view*.[[ByteLength]].
9. Let *elementSize* be the Element Size value specified in Table 61 for Element Type *type*.
10. If *getIndex* + *elementSize* > *viewSize*, throw a **RangeError** exception.
11. Let *bufferIndex* be *getIndex* + *viewOffset*.
12. Return GetValueFromBuffer(*buffer*, *bufferIndex*, *type*, **false**, Unordered, *isLittleEndian*).

24.3.1.2 SetViewValue (*view*, *requestIndex*, *isLittleEndian*, *type*, *value*)

The abstract operation SetViewValue with arguments *view*, *requestIndex*, *isLittleEndian*, *type*, and *value* is used by functions on DataView instances to store values into the view's buffer. It performs the following steps:

1. Perform ? RequireInternalSlot(*view*, [[DataView]]).
2. Assert: *view* has a [[ViewedArrayBuffer]] internal slot.
3. Let *getIndex* be ? ToIndex(*requestIndex*).
4. If ! IsBigIntElementType(*type*) is **true**, let *numberValue* be ? ToBigInt(*value*).
5. Otherwise, let *numberValue* be ? ToNumber(*value*).
6. Set *isLittleEndian* to ! ToBoolean(*isLittleEndian*).
7. Let *buffer* be *view*.[[ViewedArrayBuffer]].
8. If IsDetachedBuffer(*buffer*) is **true**, throw a **TypeError** exception.
9. Let *viewOffset* be *view*.[[ByteOffset]].
10. Let *viewSize* be *view*.[[ByteLength]].
11. Let *elementSize* be the Element Size value specified in Table 61 for Element Type *type*.
12. If *getIndex* + *elementSize* > *viewSize*, throw a **RangeError** exception.
13. Let *bufferIndex* be *getIndex* + *viewOffset*.
14. Return SetValueInBuffer(*buffer*, *bufferIndex*, *type*, *numberValue*, **false**, Unordered, *isLittleEndian*).

24.3.2 The DataView Constructor

The DataView constructor:

- is the intrinsic object *%DataView%*.
- is the initial value of the **"DataView"** property of the global object.
- creates and initializes a new DataView object when called as a constructor.
- is not intended to be called as a function and will throw an exception when called in that manner.
- is designed to be subclassable. It may be used as the value of an **`extends`** clause of a class definition. Subclass constructors that intend to inherit the specified **`DataView`** behaviour must include a **`super`** call to the **`DataView`** constructor to create and initialize subclass instances with the internal state necessary to support the **`DataView.prototype`** built-in methods.

24.3.2.1 DataView (*buffer* [, *byteOffset* [, *byteLength*]])

When the **`DataView`** function is called with at least one argument *buffer*, the following steps are taken:

1. If NewTarget is **undefined**, throw a **TypeError** exception.
2. Perform ? RequireInternalSlot(*buffer*, [[ArrayBufferData]]).
3. Let *offset* be ? ToIndex(*byteOffset*).
4. If IsDetachedBuffer(*buffer*) is **true**, throw a **TypeError** exception.
5. Let *bufferByteLength* be *buffer*.[[ArrayBufferByteLength]].
6. If *offset* > *bufferByteLength*, throw a **RangeError** exception.
7. If *byteLength* is **undefined**, then
    a. Let *viewByteLength* be *bufferByteLength* - *offset*.
8. Else,
    a. Let *viewByteLength* be ? ToIndex(*byteLength*).
    b. If *offset* + *viewByteLength* > *bufferByteLength*, throw a **RangeError** exception.
9. Let *O* be ? OrdinaryCreateFromConstructor(NewTarget, **"%DataView.prototype%"**, « [[DataView]], [[ViewedArrayBuffer]], [[ByteLength]], [[ByteOffset]] »).
10. If IsDetachedBuffer(*buffer*) is **true**, throw a **TypeError** exception.
11. Set *O*.[[ViewedArrayBuffer]] to *buffer*.
12. Set *O*.[[ByteLength]] to *viewByteLength*.
13. Set *O*.[[ByteOffset]] to *offset*.
14. Return *O*.

24.3.3 Properties of the DataView Constructor

The DataView constructor:

- has a [[Prototype]] internal slot whose value is %Function.prototype%.
- has the following properties:

24.3.3.1 DataView.prototype

The initial value of **`DataView.prototype`** is %DataView.prototype%.

This property has the attributes { [[Writable]]: **false**, [[Enumerable]]: **false**, [[Configurable]]: **false** }.

24.3.4 Properties of the DataView Prototype Object

The DataView prototype object:

- is the intrinsic object *%DataViewPrototype%*.
- has a [[Prototype]] internal slot whose value is %Object.prototype%.
- is an ordinary object.
- does not have a [[DataView]], [[ViewedArrayBuffer]], [[ByteLength]], or [[ByteOffset]] internal slot.

24.3.4.1 get DataView.prototype.buffer

`DataView.prototype.buffer` is an accessor property whose set accessor function is **undefined**. Its get accessor function performs the following steps:

1. Let *O* be the **this** value.
2. Perform ? RequireInternalSlot(*O*, [[DataView]]).
3. Assert: *O* has a [[ViewedArrayBuffer]] internal slot.
4. Let *buffer* be *O*.[[ViewedArrayBuffer]].
5. Return *buffer*.

24.3.4.2 get DataView.prototype.byteLength

`DataView.prototype.byteLength` is an accessor property whose set accessor function is **undefined**. Its get accessor function performs the following steps:

1. Let *O* be the **this** value.
2. Perform ? RequireInternalSlot(*O*, [[DataView]]).
3. Assert: *O* has a [[ViewedArrayBuffer]] internal slot.
4. Let *buffer* be *O*.[[ViewedArrayBuffer]].
5. If IsDetachedBuffer(*buffer*) is **true**, throw a **TypeError** exception.
6. Let *size* be *O*.[[ByteLength]].
7. Return *size*.

24.3.4.3 get DataView.prototype.byteOffset

`DataView.prototype.byteOffset` is an accessor property whose set accessor function is **undefined**. Its get accessor function performs the following steps:

1. Let *O* be the **this** value.
2. Perform ? RequireInternalSlot(*O*, [[DataView]]).
3. Assert: *O* has a [[ViewedArrayBuffer]] internal slot.
4. Let *buffer* be *O*.[[ViewedArrayBuffer]].
5. If IsDetachedBuffer(*buffer*) is **true**, throw a **TypeError** exception.
6. Let *offset* be *O*.[[ByteOffset]].
7. Return *offset*.

24.3.4.4 DataView.prototype.constructor

The initial value of **`DataView.prototype.constructor`** is %DataView%.

24.3.4.5 DataView.prototype.getBigInt64 (*byteOffset* [, *littleEndian*])

When the **`getBigInt64`** method is called with argument *byteOffset* and optional argument *littleEndian*, the following steps are taken:

1. Let *v* be the **this** value.
2. If *littleEndian* is not present, set *littleEndian* to **undefined**.
3. Return ? GetViewValue(*v*, *byteOffset*, *littleEndian*, BigInt64).

24.3.4.6 DataView.prototype.getBigUint64 (*byteOffset* [, *littleEndian*])

When the **`getBigUint64`** method is called with argument *byteOffset* and optional argument *littleEndian*, the following steps are taken:

1. Let *v* be the **this** value.
2. If *littleEndian* is not present, set *littleEndian* to **undefined**.
3. Return ? GetViewValue(*v*, *byteOffset*, *littleEndian*, BigUint64).

24.3.4.7 DataView.prototype.getFloat32 (*byteOffset* [, *littleEndian*])

When the **`getFloat32`** method is called with argument *byteOffset* and optional argument *littleEndian*, the following steps are taken:

1. Let *v* be the **this** value.
2. If *littleEndian* is not present, set *littleEndian* to **false**.
3. Return ? GetViewValue(*v*, *byteOffset*, *littleEndian*, Float32).

24.3.4.8 DataView.prototype.getFloat64 (*byteOffset* [, *littleEndian*])

When the **`getFloat64`** method is called with argument *byteOffset* and optional argument *littleEndian*, the following steps are taken:

1. Let *v* be the **this** value.
2. If *littleEndian* is not present, set *littleEndian* to **false**.
3. Return ? GetViewValue(*v*, *byteOffset*, *littleEndian*, Float64).

24.3.4.9 DataView.prototype.getInt8 (*byteOffset*)

When the **`getInt8`** method is called with argument *byteOffset*, the following steps are taken:

1. Let *v* be the **this** value.
2. Return ? GetViewValue(*v*, *byteOffset*, **true**, Int8).

24.3.4.10 DataView.prototype.getInt16 (*byteOffset* [, *littleEndian*])

When the **`getInt16`** method is called with argument *byteOffset* and optional argument *littleEndian*, the following steps are taken:

1. Let *v* be the **this** value.
2. If *littleEndian* is not present, set *littleEndian* to **false**.

3. Return ? GetViewValue(*v*, *byteOffset*, *littleEndian*, Int16).

24.3.4.11 DataView.prototype.getInt32 (*byteOffset* [, *littleEndian*])

When the **`getInt32`** method is called with argument *byteOffset* and optional argument *littleEndian*, the following steps are taken:

1. Let *v* be the **this** value.
2. If *littleEndian* is not present, set *littleEndian* to **false**.
3. Return ? GetViewValue(*v*, *byteOffset*, *littleEndian*, Int32).

24.3.4.12 DataView.prototype.getUint8 (*byteOffset*)

When the **`getUint8`** method is called with argument *byteOffset*, the following steps are taken:

1. Let *v* be the **this** value.
2. Return ? GetViewValue(*v*, *byteOffset*, **true**, Uint8).

24.3.4.13 DataView.prototype.getUint16 (*byteOffset* [, *littleEndian*])

When the **`getUint16`** method is called with argument *byteOffset* and optional argument *littleEndian*, the following steps are taken:

1. Let *v* be the **this** value.
2. If *littleEndian* is not present, set *littleEndian* to **false**.
3. Return ? GetViewValue(*v*, *byteOffset*, *littleEndian*, Uint16).

24.3.4.14 DataView.prototype.getUint32 (*byteOffset* [, *littleEndian*])

When the **`getUint32`** method is called with argument *byteOffset* and optional argument *littleEndian*, the following steps are taken:

1. Let *v* be the **this** value.
2. If *littleEndian* is not present, set *littleEndian* to **false**.
3. Return ? GetViewValue(*v*, *byteOffset*, *littleEndian*, Uint32).

24.3.4.15 DataView.prototype.setBigInt64 (*byteOffset*, *value* [, *littleEndian*])

When the **`setBigInt64`** method is called with arguments *byteOffset* and *value* and optional argument *littleEndian*, the following steps are taken:

1. Let *v* be the **this** value.
2. If *littleEndian* is not present, set *littleEndian* to **undefined**.
3. Return ? SetViewValue(*v*, *byteOffset*, *littleEndian*, BigInt64, *value*).

24.3.4.16 DataView.prototype.setBigUint64 (*byteOffset*, *value* [, *littleEndian*])

When the **`setBigUint64`** method is called with arguments *byteOffset* and *value* and optional argument *littleEndian*, the following steps are taken:

1. Let *v* be the **this** value.
2. If *littleEndian* is not present, set *littleEndian* to **undefined**.
3. Return ? SetViewValue(*v*, *byteOffset*, *littleEndian*, BigUint64, *value*).

24.3.4.17 DataView.prototype.setFloat32 (*byteOffset*, *value* [, *littleEndian*])

When the **`setFloat32`** method is called with arguments *byteOffset* and *value* and optional argument *littleEndian*, the following steps are taken:

1. Let *v* be the **this** value.
2. If *littleEndian* is not present, set *littleEndian* to **false**.
3. Return ? SetViewValue(*v*, *byteOffset*, *littleEndian*, Float32, *value*).

24.3.4.18 DataView.prototype.setFloat64 (*byteOffset*, *value* [, *littleEndian*])

When the **`setFloat64`** method is called with arguments *byteOffset* and *value* and optional argument *littleEndian*, the following steps are taken:

1. Let *v* be the **this** value.
2. If *littleEndian* is not present, set *littleEndian* to **false**.
3. Return ? SetViewValue(*v*, *byteOffset*, *littleEndian*, Float64, *value*).

24.3.4.19 DataView.prototype.setInt8 (*byteOffset*, *value*)

When the **`setInt8`** method is called with arguments *byteOffset* and *value*, the following steps are taken:

1. Let *v* be the **this** value.
2. Return ? SetViewValue(*v*, *byteOffset*, **true**, Int8, *value*).

24.3.4.20 DataView.prototype.setInt16 (*byteOffset*, *value* [, *littleEndian*])

When the **`setInt16`** method is called with arguments *byteOffset* and *value* and optional argument *littleEndian*, the following steps are taken:

1. Let *v* be the **this** value.
2. If *littleEndian* is not present, set *littleEndian* to **false**.
3. Return ? SetViewValue(*v*, *byteOffset*, *littleEndian*, Int16, *value*).

24.3.4.21 DataView.prototype.setInt32 (*byteOffset*, *value* [, *littleEndian*])

When the **`setInt32`** method is called with arguments *byteOffset* and *value* and optional argument *littleEndian*, the following steps are taken:

1. Let *v* be the **this** value.
2. If *littleEndian* is not present, set *littleEndian* to **false**.
3. Return ? SetViewValue(*v*, *byteOffset*, *littleEndian*, Int32, *value*).

24.3.4.22 DataView.prototype.setUint8 (*byteOffset*, *value*)

When the **`setUint8`** method is called with arguments *byteOffset* and *value*, the following steps are taken:

1. Let *v* be the **this** value.
2. Return ? SetViewValue(*v*, *byteOffset*, **true**, Uint8, *value*).

24.3.4.23 DataView.prototype.setUint16 (*byteOffset*, *value* [, *littleEndian*])

When the **`setUint16`** method is called with arguments *byteOffset* and *value* and optional argument *littleEndian*, the following steps are taken:

1. Let *v* be the **this** value.
2. If *littleEndian* is not present, set *littleEndian* to **false**.
3. Return ? SetViewValue(*v*, *byteOffset*, *littleEndian*, Uint16, *value*).

24.3.4.24 DataView.prototype.setUint32 (*byteOffset*, *value* [, *littleEndian*])

When the **`setUint32`** method is called with arguments *byteOffset* and *value* and optional argument *littleEndian*, the following steps are taken:

1. Let *v* be the **this** value.
2. If *littleEndian* is not present, set *littleEndian* to **false**.
3. Return ? SetViewValue(*v*, *byteOffset*, *littleEndian*, Uint32, *value*).

24.3.4.25 DataView.prototype [@@toStringTag]

The initial value of the @@toStringTag property is the String value **"DataView"**.

This property has the attributes { [[Writable]]: **false**, [[Enumerable]]: **false**, [[Configurable]]: **true** }.

24.3.5 Properties of DataView Instances

DataView instances are ordinary objects that inherit properties from the DataView prototype object. DataView instances each have [[DataView]], [[ViewedArrayBuffer]], [[ByteLength]], and [[ByteOffset]] internal slots.

> NOTE The value of the [[DataView]] internal slot is not used within this specification. The simple presence of that internal slot is used within the specification to identify objects created using the **`DataView`** constructor.

24.4 The Atomics Object

The Atomics object:

- is the intrinsic object *%Atomics%*.
- is the initial value of the **"Atomics"** property of the global object.
- is an ordinary object.
- has a [[Prototype]] internal slot whose value is %Object.prototype%.
- does not have a [[Construct]] internal method; it cannot be used as a constructor with the **`new`** operator.
- does not have a [[Call]] internal method; it cannot be invoked as a function.

The Atomics object provides functions that operate indivisibly (atomically) on shared memory array cells as well as functions that let agents wait for and dispatch primitive events. When used with discipline, the Atomics functions allow multi-agent programs that communicate through shared memory to execute in a well-understood order even on parallel CPUs. The rules that govern shared-memory communication are provided by the memory model, defined below.

> NOTE For informative guidelines for programming and implementing shared memory in ECMAScript, please see the notes at the end of the memory model section.

24.4.1 Abstract Operations for Atomics

24.4.1.1 ValidateSharedIntegerTypedArray (*typedArray* [, *waitable*])

The abstract operation ValidateSharedIntegerTypedArray takes one argument *typedArray* and an optional Boolean *waitable*. It performs the following steps:

1. If *waitable* is not present, set *waitable* to **false**.
2. Perform ? RequireInternalSlot(*typedArray*, [[TypedArrayName]]).
3. Let *typeName* be *typedArray*.[[TypedArrayName]].
4. Let *type* be the Element Type value in Table 61 for *typeName*.
5. If *waitable* is **true**, then
   a. If *typeName* is not **"Int32Array"** or **"BigInt64Array"**, throw a **TypeError** exception.
6. Else,
   a. If ! IsUnclampedIntegerElementType(*type*) is **false** and ! IsBigIntElementType(*type*) is **false**, throw a **TypeError** exception.
7. Assert: *typedArray* has a [[ViewedArrayBuffer]] internal slot.
8. Let *buffer* be *typedArray*.[[ViewedArrayBuffer]].
9. If IsSharedArrayBuffer(*buffer*) is **false**, throw a **TypeError** exception.
10. Return *buffer*.

24.4.1.2 ValidateAtomicAccess (*typedArray*, *requestIndex*)

The abstract operation ValidateAtomicAccess takes two arguments, *typedArray* and *requestIndex*. It performs the following steps:

1. Assert: *typedArray* is an Object that has a [[ViewedArrayBuffer]] internal slot.
2. Let *accessIndex* be ? ToIndex(*requestIndex*).
3. Let *length* be *typedArray*.[[ArrayLength]].
4. Assert: *accessIndex* ≥ 0.
5. If *accessIndex* ≥ *length*, throw a **RangeError** exception.
6. Return *accessIndex*.

24.4.1.3 GetWaiterList (*block*, *i*)

A *WaiterList* is a semantic object that contains an ordered list of those agents that are waiting on a location (*block*, *i*) in shared memory; *block* is a Shared Data Block and *i* a byte offset into the memory of *block*. A WaiterList object also optionally contains a Synchronize event denoting the previous leaving of its critical section.

Initially a WaiterList object has an empty list and no Synchronize event.

The agent cluster has a store of WaiterList objects; the store is indexed by (*block*, *i*). WaiterLists are agent-independent: a lookup in the store of WaiterLists by (*block*, *i*) will result in the same WaiterList object in any agent in the agent cluster.

Each WaiterList has a *critical section* that controls exclusive access to that WaiterList during evaluation. Only a single agent may enter a WaiterList's critical section at one time. Entering and leaving a WaiterList's critical section is controlled by the abstract operations EnterCriticalSection and LeaveCriticalSection. Operations on a WaiterList—adding and removing waiting agents, traversing the list of agents, suspending and notifying agents on the list, setting and retrieving the Synchronize event—may only be performed by agents that have entered the WaiterList's critical section.

The abstract operation GetWaiterList takes two arguments, a Shared Data Block *block* and a nonnegative integer *i*. It performs the following steps:

1. Assert: *block* is a Shared Data Block.
2. Assert: *i* and *i* + 3 are valid byte offsets within the memory of *block*.
3. Assert: *i* is divisible by 4.
4. Return the WaiterList that is referenced by the pair (*block*, *i*).

24.4.1.4 EnterCriticalSection (*WL*)

The abstract operation EnterCriticalSection takes one argument, a WaiterList *WL*. It performs the following steps:

1. Assert: The calling agent is not in the critical section for any WaiterList.
2. Wait until no agent is in the critical section for *WL*, then enter the critical section for *WL* (without allowing any other agent to enter).
3. If *WL* has a Synchronize event, then
    a. NOTE: A *WL* whose critical section has been entered at least once has a Synchronize event set by LeaveCriticalSection.
    b. Let *execution* be the [[CandidateExecution]] field of the surrounding agent's Agent Record.
    c. Let *eventsRecord* be the Agent Events Record in *execution*.[[EventsRecords]] whose [[AgentSignifier]] is AgentSignifier().
    d. Let *entererEventList* be *eventsRecord*.[[EventList]].
    e. Let *enterEvent* be a new Synchronize event.
    f. Append *enterEvent* to *entererEventList*.
    g. Let *leaveEvent* be the Synchronize event in *WL*.
    h. Append (*leaveEvent*, *enterEvent*) to *eventsRecord*.[[AgentSynchronizesWith]].

EnterCriticalSection has *contention* when an agent attempting to enter the critical section must wait for another agent to leave it. When there is no contention, FIFO order of EnterCriticalSection calls is observable. When there is contention, an implementation may choose an arbitrary order but may not cause an agent to wait indefinitely.

24.4.1.5 LeaveCriticalSection (*WL*)

The abstract operation LeaveCriticalSection takes one argument, a WaiterList *WL*. It performs the following steps:

1. Assert: The calling agent is in the critical section for *WL*.
2. Let *execution* be the [[CandidateExecution]] field of the calling surrounding's Agent Record.

3. Let *eventsRecord* be the Agent Events Record in *execution*.[[EventsRecords]] whose [[AgentSignifier]] is AgentSignifier().
4. Let *leaverEventList* be *eventsRecord*.[[EventList]].
5. Let *leaveEvent* be a new Synchronize event.
6. Append *leaveEvent* to *leaverEventList*.
7. Set the Synchronize event in *WL* to *leaveEvent*.
8. Leave the critical section for *WL*.

24.4.1.6 AddWaiter (*WL*, *W*)

The abstract operation AddWaiter takes two arguments, a WaiterList *WL* and an agent signifier *W*. It performs the following steps:

1. Assert: The calling agent is in the critical section for *WL*.
2. Assert: *W* is not on the list of waiters in any WaiterList.
3. Add *W* to the end of the list of waiters in *WL*.

24.4.1.7 RemoveWaiter (*WL*, *W*)

The abstract operation RemoveWaiter takes two arguments, a WaiterList *WL* and an agent signifier *W*. It performs the following steps:

1. Assert: The calling agent is in the critical section for *WL*.
2. Assert: *W* is on the list of waiters in *WL*.
3. Remove *W* from the list of waiters in *WL*.

24.4.1.8 RemoveWaiters (*WL*, *c*)

The abstract operation RemoveWaiters takes two arguments, a WaiterList *WL* and nonnegative integer *c*. It performs the following steps:

1. Assert: The calling agent is in the critical section for *WL*.
2. Let *L* be a new empty List.
3. Let *S* be a reference to the list of waiters in *WL*.
4. Repeat, while $c > 0$ and *S* is not an empty List,
    a. Let *W* be the first waiter in *S*.
    b. Add *W* to the end of *L*.
    c. Remove *W* from *S*.
    d. Set *c* to *c* - 1.
5. Return *L*.

24.4.1.9 Suspend (*WL*, *W*, *timeout*)

The abstract operation Suspend takes three arguments, a WaiterList *WL*, an agent signifier *W*, and a nonnegative, non-**NaN** Number *timeout*. It performs the following steps:

1. Assert: The calling agent is in the critical section for *WL*.
2. Assert: *W* is equal to AgentSignifier().
3. Assert: *W* is on the list of waiters in *WL*.

4. Assert: AgentCanSuspend() is **true**.
5. Perform LeaveCriticalSection(*WL*) and suspend *W* for up to *timeout* milliseconds, performing the combined operation in such a way that a notification that arrives after the critical section is exited but before the suspension takes effect is not lost. *W* can notify either because the timeout expired or because it was notified explicitly by another agent calling NotifyWaiter(*WL*, *W*), and not for any other reasons at all.
6. Perform EnterCriticalSection(*WL*).
7. If *W* was notified explicitly by another agent calling NotifyWaiter(*WL*, *W*), return **true**.
8. Return **false**.

24.4.1.10 NotifyWaiter (*WL*, *W*)

The abstract operation NotifyWaiter takes two arguments, a WaiterList *WL* and an agent signifier *W*. It performs the following steps:

1. Assert: The calling agent is in the critical section for *WL*.
2. Notify the agent *W*.

NOTE The embedding may delay notifying *W*, e.g. for resource management reasons, but *W* must eventually be notified in order to guarantee forward progress.

24.4.1.11 AtomicReadModifyWrite (*typedArray*, *index*, *value*, *op*)

The abstract operation AtomicReadModifyWrite takes four arguments, *typedArray*, *index*, *value*, and a pure combining operation *op*. The pure combining operation *op* takes two List of byte values arguments and returns a List of byte values. The operation atomically loads a value, combines it with another value, and stores the result of the combination. It returns the loaded value. It performs the following steps:

1. Let *buffer* be ? ValidateSharedIntegerTypedArray(*typedArray*).
2. Let *i* be ? ValidateAtomicAccess(*typedArray*, *index*).
3. Let *arrayTypeName* be *typedArray*.[[TypedArrayName]].
4. If *typedArray*.[[ContentType]] is BigInt, let *v* be ? ToBigInt(*value*).
5. Otherwise, let *v* be ? ToInteger(*value*).
6. Let *elementSize* be the Element Size value specified in Table 61 for *arrayTypeName*.
7. Let *elementType* be the Element Type value in Table 61 for *arrayTypeName*.
8. Let *offset* be *typedArray*.[[ByteOffset]].
9. Let *indexedPosition* be (*i* × *elementSize*) + *offset*.
10. Return GetModifySetValueInBuffer(*buffer*, *indexedPosition*, *elementType*, *v*, *op*).

24.4.1.12 AtomicLoad (*typedArray*, *index*)

The abstract operation AtomicLoad takes two arguments, *typedArray*, *index*. The operation atomically loads a value and returns the loaded value. It performs the following steps:

1. Let *buffer* be ? ValidateSharedIntegerTypedArray(*typedArray*).
2. Let *i* be ? ValidateAtomicAccess(*typedArray*, *index*).
3. Let *arrayTypeName* be *typedArray*.[[TypedArrayName]].
4. Let *elementSize* be the Element Size value specified in Table 61 for *arrayTypeName*.
5. Let *elementType* be the Element Type value in Table 61 for *arrayTypeName*.

6. Let *offset* be *typedArray*.[[ByteOffset]].
7. Let *indexedPosition* be (*i* × *elementSize*) + *offset*.
8. Return GetValueFromBuffer(*buffer*, *indexedPosition*, *elementType*, **true**, SeqCst).

24.4.2 Atomics.add (*typedArray*, *index*, *value*)

Let **add** denote a semantic function of two List of byte values arguments that applies the addition operation to the Number values corresponding to the List of byte values arguments and returns a List of byte values corresponding to the result of that operation.

The following steps are taken:

1. Return ? AtomicReadModifyWrite(*typedArray*, *index*, *value*, **add**).

24.4.3 Atomics.and (*typedArray*, *index*, *value*)

Let **and** denote a semantic function of two List of byte values arguments that applies the bitwise-and operation element-wise to the two arguments and returns a List of byte values corresponding to the result of that operation.

The following steps are taken:

1. Return ? AtomicReadModifyWrite(*typedArray*, *index*, *value*, **and**).

24.4.4 Atomics.compareExchange (*typedArray*, *index*, *expectedValue*, *replacementValue*)

The following steps are taken:

1. Let *buffer* be ? ValidateSharedIntegerTypedArray(*typedArray*).
2. Let *i* be ? ValidateAtomicAccess(*typedArray*, *index*).
3. Let *arrayTypeName* be *typedArray*.[[TypedArrayName]].
4. If *typedArray*.[[ContentType]] is BigInt, then
    a. Let *expected* be ? ToBigInt(*expectedValue*).
    b. Let *replacement* be ? ToBigInt(*replacementValue*).
5. Else,
    a. Let *expected* be ? ToInteger(*expectedValue*).
    b. Let *replacement* be ? ToInteger(*replacementValue*).
6. Let *elementType* be the Element Type value in Table 61 for *arrayTypeName*.
7. Let *isLittleEndian* be the value of the [[LittleEndian]] field of the surrounding agent's Agent Record.
8. Let *expectedBytes* be NumericToRawBytes(*elementType*, *expected*, *isLittleEndian*).
9. Let *elementSize* be the Element Size value specified in Table 61 for *arrayTypeName*.
10. Let *offset* be *typedArray*.[[ByteOffset]].
11. Let *indexedPosition* be (*i* × *elementSize*) + *offset*.
12. Let **compareExchange** denote a semantic function of two List of byte values arguments that returns the second argument if the first argument is element-wise equal to *expectedBytes*.
13. Return GetModifySetValueInBuffer(*buffer*, *indexedPosition*, *elementType*, *replacement*, **compareExchange**).

24.4.5 Atomics.exchange (*typedArray*, *index*, *value*)

Let **second** denote a semantic function of two List of byte values arguments that returns its second argument.

The following steps are taken:

1. Return ? AtomicReadModifyWrite(*typedArray*, *index*, *value*, **second**).

24.4.6 Atomics.isLockFree (*size*)

The following steps are taken:

1. Let *n* be ? ToInteger(*size*).
2. Let *AR* be the Agent Record of the surrounding agent.
3. If *n* equals 1, return *AR*.[[IsLockFree1]].
4. If *n* equals 2, return *AR*.[[IsLockFree2]].
5. If *n* equals 4, return **true**.
6. If *n* equals 8, return *AR*.[[IsLockFree8]].
7. Return **false**.

NOTE

Atomics.isLockFree() is an optimization primitive. The intuition is that if the atomic step of an atomic primitive (**compareExchange**, **load**, **store**, **add**, **sub**, **and**, **or**, **xor**, or **exchange**) on a datum of size *n* bytes will be performed without the calling agent acquiring a lock outside the *n* bytes comprising the datum, then **Atomics.isLockFree**(*n*) will return **true**. High-performance algorithms will use **Atomics.isLockFree** to determine whether to use locks or atomic operations in critical sections. If an atomic primitive is not lock-free then it is often more efficient for an algorithm to provide its own locking.

Atomics.isLockFree(4) always returns **true** as that can be supported on all known relevant hardware. Being able to assume this will generally simplify programs.

Regardless of the value of **Atomics.isLockFree**, all atomic operations are guaranteed to be atomic. For example, they will never have a visible operation take place in the middle of the operation (e.g., "tearing").

24.4.7 Atomics.load (*typedArray*, *index*)

The following steps are taken:

1. Return ? AtomicLoad(*typedArray*, *index*).

24.4.8 Atomics.or (*typedArray*, *index*, *value*)

Let **or** denote a semantic function of two List of byte values arguments that applies the bitwise-or operation element-wise to the two arguments and returns a List of byte values corresponding to the result of that operation.

The following steps are taken:

1. Return ? AtomicReadModifyWrite(*typedArray*, *index*, *value*, **or**).

24.4.9 Atomics.store (*typedArray*, *index*, *value*)

The following steps are taken:

1. Let *buffer* be ? ValidateSharedIntegerTypedArray(*typedArray*).
2. Let *i* be ? ValidateAtomicAccess(*typedArray*, *index*).
3. Let *arrayTypeName* be *typedArray*.[[TypedArrayName]].
4. If *arrayTypeName* is **"BigUint64Array"** or **"BigInt64Array"**, let *v* be ? ToBigInt(*value*).
5. Otherwise, let *v* be ? ToInteger(*value*).
6. Let *elementSize* be the Element Size value specified in Table 61 for *arrayTypeName*.
7. Let *elementType* be the Element Type value in Table 61 for *arrayTypeName*.
8. Let *offset* be *typedArray*.[[ByteOffset]].
9. Let *indexedPosition* be (*i* × *elementSize*) + *offset*.
10. Perform SetValueInBuffer(*buffer*, *indexedPosition*, *elementType*, *v*, **true**, SeqCst).
11. Return *v*.

24.4.10 Atomics.sub (*typedArray*, *index*, *value*)

Let **`subtract`** denote a semantic function of two List of byte values arguments that applies the subtraction operation to the Number values corresponding to the List of byte values arguments and returns a List of byte values corresponding to the result of that operation.

The following steps are taken:

1. Return ? AtomicReadModifyWrite(*typedArray*, *index*, *value*, **`subtract`**).

24.4.11 Atomics.wait (*typedArray*, *index*, *value*, *timeout*)

`Atomics.wait` puts the calling agent in a wait queue and puts it to sleep until it is notified or the sleep times out. The following steps are taken:

1. Let *buffer* be ? ValidateSharedIntegerTypedArray(*typedArray*, **true**).
2. Let *i* be ? ValidateAtomicAccess(*typedArray*, *index*).
3. Let *arrayTypeName* be *typedArray*.[[TypedArrayName]].
4. If *arrayTypeName* is **"BigInt64Array"**, let *v* be ? ToBigInt64(*value*).
5. Otherwise, let *v* be ? ToInt32(*value*).
6. Let *q* be ? ToNumber(*timeout*).
7. If *q* is **NaN**, let *t* be +∞; else let *t* be max(*q*, 0).
8. Let *B* be AgentCanSuspend().
9. If *B* is **false**, throw a **TypeError** exception.
10. Let *block* be *buffer*.[[ArrayBufferData]].
11. Let *offset* be *typedArray*.[[ByteOffset]].
12. Let *elementSize* be the Element Size value specified in Table 61 for *arrayTypeName*.
13. Let *indexedPosition* be (*i* × *elementSize*) + *offset*.
14. Let *WL* be GetWaiterList(*block*, *indexedPosition*).
15. Perform EnterCriticalSection(*WL*).
16. Let *w* be ! AtomicLoad(*typedArray*, *i*).
17. If *v* is not equal to *w*, then
    a. Perform LeaveCriticalSection(*WL*).

    b. Return the String **"not-equal"**.
18. Let *W* be AgentSignifier().
19. Perform AddWaiter(*WL*, *W*).
20. Let *notified* be Suspend(*WL*, *W*, *t*).
21. If *notified* is **true**, then
    a. Assert: *W* is not on the list of waiters in *WL*.
22. Else,
    a. Perform RemoveWaiter(*WL*, *W*).
23. Perform LeaveCriticalSection(*WL*).
24. If *notified* is **true**, return the String **"ok"**.
25. Return the String **"timed-out"**.

24.4.12 Atomics.notify (*typedArray*, *index*, *count*)

`Atomics.notify` notifies some agents that are sleeping in the wait queue. The following steps are taken:

1. Let *buffer* be ? ValidateSharedIntegerTypedArray(*typedArray*, **true**).
2. Let *i* be ? ValidateAtomicAccess(*typedArray*, *index*).
3. If *count* is **undefined**, let *c* be +∞.
4. Else,
    a. Let *intCount* be ? ToInteger(*count*).
    b. Let *c* be max(*intCount*, 0).
5. Let *block* be *buffer*.[[ArrayBufferData]].
6. Let *offset* be *typedArray*.[[ByteOffset]].
7. Let *arrayTypeName* be *typedArray*.[[TypedArrayName]].
8. Let *elementSize* be the Element Size value specified in Table 61 for *arrayTypeName*.
9. Let *indexedPosition* be (*i* × *elementSize*) + *offset*.
10. Let *WL* be GetWaiterList(*block*, *indexedPosition*).
11. Let *n* be 0.
12. Perform EnterCriticalSection(*WL*).
13. Let *S* be RemoveWaiters(*WL*, *c*).
14. Repeat, while *S* is not an empty List,
    a. Let *W* be the first agent in *S*.
    b. Remove *W* from the front of *S*.
    c. Perform NotifyWaiter(*WL*, *W*).
    d. Set *n* to *n* + 1.
15. Perform LeaveCriticalSection(*WL*).
16. Return *n*.

24.4.13 Atomics.xor (*typedArray*, *index*, *value*)

Let **`xor`** denote a semantic function of two List of byte values arguments that applies the bitwise-xor operation element-wise to the two arguments and returns a List of byte values corresponding to the result of that operation.

The following steps are taken:

1. Return ? AtomicReadModifyWrite(*typedArray*, *index*, *value*, **`xor`**).

24.4.14 Atomics [@@toStringTag]

The initial value of the @@toStringTag property is the String value **"Atomics"**.

This property has the attributes { [[Writable]]: **false**, [[Enumerable]]: **false**, [[Configurable]]: **true** }.

24.5 The JSON Object

The JSON object:

- is the intrinsic object *%JSON%*.
- is the initial value of the **"JSON"** property of the global object.
- is an ordinary object.
- contains two functions, **`parse`** and **`stringify`**, that are used to parse and construct JSON texts.
- has a [[Prototype]] internal slot whose value is %Object.prototype%.
- does not have a [[Construct]] internal method; it cannot be used as a constructor with the **`new`** operator.
- does not have a [[Call]] internal method; it cannot be invoked as a function.

The JSON Data Interchange Format is defined in ECMA-404. The JSON interchange format used in this specification is exactly that described by ECMA-404. Conforming implementations of **`JSON.parse`** and **`JSON.stringify`** must support the exact interchange format described in the ECMA-404 specification without any deletions or extensions to the format.

24.5.1 JSON.parse (*text* [, *reviver*])

The **`parse`** function parses a JSON text (a JSON-formatted String) and produces an ECMAScript value. The JSON format represents literals, arrays, and objects with a syntax similar to the syntax for ECMAScript literals, Array Initializers, and Object Initializers. After parsing, JSON objects are realized as ECMAScript objects. JSON arrays are realized as ECMAScript Array instances. JSON strings, numbers, booleans, and null are realized as ECMAScript Strings, Numbers, Booleans, and **null**.

The optional *reviver* parameter is a function that takes two parameters, *key* and *value*. It can filter and transform the results. It is called with each of the *key*/*value* pairs produced by the parse, and its return value is used instead of the original value. If it returns what it received, the structure is not modified. If it returns **undefined** then the property is deleted from the result.

1. Let *jsonString* be ? ToString(*text*).
2. Parse ! UTF16DecodeString(*jsonString*) as a JSON text as specified in ECMA-404. Throw a **SyntaxError** exception if it is not a valid JSON text as defined in that specification.
3. Let *scriptString* be the string-concatenation of **"("**, *jsonString*, and **");"**.
4. Let *completion* be the result of parsing and evaluating ! UTF16DecodeString(*scriptString*) as if it was the source text of an ECMAScript *Script*. The extended PropertyDefinitionEvaluation semantics defined in B.3.1 must not be used during the evaluation.
5. Let *unfiltered* be *completion*.[[Value]].
6. Assert: *unfiltered* is either a String, Number, Boolean, Null, or an Object that is defined by either an *ArrayLiteral* or an *ObjectLiteral*.
7. If IsCallable(*reviver*) is **true**, then
    a. Let *root* be OrdinaryObjectCreate(%Object.prototype%).
    b. Let *rootName* be the empty String.

c. Perform ! CreateDataPropertyOrThrow(*root*, *rootName*, *unfiltered*).
d. Return ? InternalizeJSONProperty(*root*, *rootName*, *reviver*).

8. Else,
   a. Return *unfiltered*.

This function is the *%JSONParse%* intrinsic object.

The **"length"** property of the **`parse`** function is 2.

> NOTE Valid JSON text is a subset of the ECMAScript *PrimaryExpression* syntax as modified by Step 4 above. Step 2 verifies that *jsonString* conforms to that subset, and step 6 verifies that that parsing and evaluation returns a value of an appropriate type.

24.5.1.1 Runtime Semantics: InternalizeJSONProperty (*holder*, *name*, *reviver*)

The abstract operation InternalizeJSONProperty is a recursive abstract operation that takes three parameters: a *holder* object, the String *name* of a property in that object, and a *reviver* function.

> NOTE 1 This algorithm intentionally does not throw an exception if either [[Delete]] or CreateDataProperty return **false**.

1. Let *val* be ? Get(*holder*, *name*).
2. If Type(*val*) is Object, then
   a. Let *isArray* be ? IsArray(*val*).
   b. If *isArray* is **true**, then
      i. Let *I* be 0.
      ii. Let *len* be ? LengthOfArrayLike(*val*).
      iii. Repeat, while *I* < *len*,
         1. Let *newElement* be ? InternalizeJSONProperty(*val*, ! ToString(*I*), *reviver*).
         2. If *newElement* is **undefined**, then
            a. Perform ? *val*.[[Delete]](! ToString(*I*)).
         3. Else,
            a. Perform ? CreateDataProperty(*val*, ! ToString(*I*), *newElement*).
         4. Set *I* to *I* + 1.
   c. Else,
      i. Let *keys* be ? EnumerableOwnPropertyNames(*val*, key).
      ii. For each String *P* in *keys*, do
         1. Let *newElement* be ? InternalizeJSONProperty(*val*, *P*, *reviver*).
         2. If *newElement* is **undefined**, then
            a. Perform ? *val*.[[Delete]](*P*).
         3. Else,
            a. Perform ? CreateDataProperty(*val*, *P*, *newElement*).
3. Return ? Call(*reviver*, *holder*, « *name*, *val* »).

It is not permitted for a conforming implementation of **`JSON.parse`** to extend the JSON grammars. If an implementation wishes to support a modified or extended JSON interchange format it must do so by defining a different parse function.

NOTE 2 In the case where there are duplicate name Strings within an object, lexically preceding values for the same key shall be overwritten.

24.5.2 JSON.stringify (*value* [, *replacer* [, *space*]])

The **`stringify`** function returns a String in UTF-16 encoded JSON format representing an ECMAScript value, or **undefined**. It can take three parameters. The *value* parameter is an ECMAScript value, which is usually an object or array, although it can also be a String, Boolean, Number or **null**. The optional *replacer* parameter is either a function that alters the way objects and arrays are stringified, or an array of Strings and Numbers that acts as an inclusion list for selecting the object properties that will be stringified. The optional *space* parameter is a String or Number that allows the result to have white space injected into it to improve human readability.

These are the steps in stringifying an object:

1. Let *stack* be a new empty List.
2. Let *indent* be the empty String.
3. Let *PropertyList* and *ReplacerFunction* be **undefined**.
4. If Type(*replacer*) is Object, then
    a. If IsCallable(*replacer*) is **true**, then
        i. Set *ReplacerFunction* to *replacer*.
    b. Else,
        i. Let *isArray* be ? IsArray(*replacer*).
        ii. If *isArray* is **true**, then
            1. Set *PropertyList* to a new empty List.
            2. Let *len* be ? LengthOfArrayLike(*replacer*).
            3. Let *k* be 0.
            4. Repeat, while $k < len$,
                a. Let *v* be ? Get(*replacer*, ! ToString(*k*)).
                b. Let *item* be **undefined**.
                c. If Type(*v*) is String, set *item* to *v*.
                d. Else if Type(*v*) is Number, set *item* to ! ToString(*v*).
                e. Else if Type(*v*) is Object, then
                i. If *v* has a [[StringData]] or [[NumberData]] internal slot, set *item* to ? ToString(*v*).
                f. If *item* is not **undefined** and *item* is not currently an element of *PropertyList*, then
                i. Append *item* to the end of *PropertyList*.
                g. Set *k* to $k + 1$.
5. If Type(*space*) is Object, then
    a. If *space* has a [[NumberData]] internal slot, then
        i. Set *space* to ? ToNumber(*space*).
    b. Else if *space* has a [[StringData]] internal slot, then
        i. Set *space* to ? ToString(*space*).
6. If Type(*space*) is Number, then
    a. Set *space* to min(10, ! ToInteger(*space*)).
    b. If $space < 1$, let *gap* be the empty String; otherwise let *gap* be the String value containing *space* occurrences of the code unit 0x0020 (SPACE).
7. Else if Type(*space*) is String, then

a. If the length of *space* is 10 or less, let *gap* be *space*; otherwise let *gap* be the String value consisting of the first 10 code units of *space*.

8. Else,
    a. Let *gap* be the empty String.
9. Let *wrapper* be OrdinaryObjectCreate(%Object.prototype%).
10. Perform ! CreateDataPropertyOrThrow(*wrapper*, the empty String, *value*).
11. Let *state* be the Record { [[ReplacerFunction]]: *ReplacerFunction*, [[Stack]]: *stack*, [[Indent]]: *indent*, [[Gap]]: *gap*, [[PropertyList]]: *PropertyList* }.
12. Return ? SerializeJSONProperty(*state*, the empty String, *wrapper*).

This function is the *%JSONStringify%* intrinsic object.

The **"length"** property of the **`stringify`** function is 3.

NOTE 1 JSON structures are allowed to be nested to any depth, but they must be acyclic. If *value* is or contains a cyclic structure, then the stringify function must throw a **TypeError** exception. This is an example of a value that cannot be stringified:

```
a = [];
a[0] = a;
my_text = JSON.stringify(a); // This must throw a TypeError.
```

NOTE 2 Symbolic primitive values are rendered as follows:

- The **null** value is rendered in JSON text as the String **"null"**.
- The **undefined** value is not rendered.
- The **true** value is rendered in JSON text as the String **"true"**.
- The **false** value is rendered in JSON text as the String **"false"**.

NOTE 3 String values are wrapped in QUOTATION MARK (**`"`**) code units. The code units **`"`** and **`\`** are escaped with **`\`** prefixes. Control characters code units are replaced with escape sequences **`\u`**HHHH, or with the shorter forms, **`\b`** (BACKSPACE), **`\f`** (FORM FEED), **`\n`** (LINE FEED), **`\r`** (CARRIAGE RETURN), **`\t`** (CHARACTER TABULATION).

NOTE 4 Finite numbers are stringified as if by calling ToString(*number*). **NaN** and **Infinity** regardless of sign are represented as the String **"null"**.

NOTE 5 Values that do not have a JSON representation (such as **undefined** and functions) do not produce a String. Instead they produce the **undefined** value. In arrays these values are represented as the String **"null"**. In objects an unrepresentable value causes the property to be excluded from stringification.

NOTE 6 An object is rendered as U+007B (LEFT CURLY BRACKET) followed by zero or more properties, separated with a U+002C (COMMA), closed with a U+007D (RIGHT CURLY BRACKET). A property is a quoted String representing the key or property name, a U+003A (COLON), and then the stringified property value. An array is rendered as an opening U+005B (LEFT SQUARE BRACKET followed by zero or more values, separated with a U+002C (COMMA), closed with a U+005D (RIGHT SQUARE BRACKET).

24.5.2.1 Runtime Semantics: SerializeJSONProperty (*state*, *key*, *holder*)

The abstract operation SerializeJSONProperty with arguments *state*, *key*, and *holder* performs the following steps:

1. Let *value* be ? Get(*holder*, *key*).
2. If Type(*value*) is Object or BigInt, then
    a. Let *toJSON* be ? GetV(*value*, **"toJSON"**).
    b. If IsCallable(*toJSON*) is **true**, then
        i. Set *value* to ? Call(*toJSON*, *value*, « *key* »).
3. If *state*.[[ReplacerFunction]] is not **undefined**, then
    a. Set *value* to ? Call(*state*.[[ReplacerFunction]], *holder*, « *key*, *value* »).
4. If Type(*value*) is Object, then
    a. If *value* has a [[NumberData]] internal slot, then
        i. Set *value* to ? ToNumber(*value*).
    b. Else if *value* has a [[StringData]] internal slot, then
        i. Set *value* to ? ToString(*value*).
    c. Else if *value* has a [[BooleanData]] internal slot, then
        i. Set *value* to *value*.[[BooleanData]].
    d. Else if *value* has a [[BigIntData]] internal slot, then
        i. Set *value* to *value*.[[BigIntData]].
5. If *value* is **null**, return **"null"**.
6. If *value* is **true**, return **"true"**.
7. If *value* is **false**, return **"false"**.
8. If Type(*value*) is String, return QuoteJSONString(*value*).
9. If Type(*value*) is Number, then
    a. If *value* is finite, return ! ToString(*value*).
    b. Return **"null"**.
10. If Type(*value*) is BigInt, throw a **TypeError** exception.
11. If Type(*value*) is Object and IsCallable(*value*) is **false**, then
    a. Let *isArray* be ? IsArray(*value*).
    b. If *isArray* is **true**, return ? SerializeJSONArray(*state*, *value*).
    c. Return ? SerializeJSONObject(*state*, *value*).
12. Return **undefined**.

24.5.2.2 Runtime Semantics: QuoteJSONString (*value*)

The abstract operation QuoteJSONString with argument *value* wraps a String value in QUOTATION MARK code units and escapes certain other code units within it.

This operation interprets a String value as a sequence of UTF-16 encoded code points, as described in 6.1.4.

1. Let *product* be the String value consisting solely of the code unit 0x0022 (QUOTATION MARK).
2. For each code point *C* in ! UTF16DecodeString(*value*), do
    a. If *C* is listed in the "Code Point" column of Table 64, then
        i. Set *product* to the string-concatenation of *product* and the escape sequence for *C* as specified in the "Escape Sequence" column of the corresponding row.
    b. Else if *C* has a numeric value less than 0x0020 (SPACE), or if *C* has the same numeric value as a leading surrogate or trailing surrogate, then
        i. Let *unit* be the code unit whose numeric value is that of *C*.
        ii. Set *product* to the string-concatenation of *product* and UnicodeEscape(*unit*).
    c. Else,
        i. Set *product* to the string-concatenation of *product* and the UTF16Encoding of *C*.
3. Set *product* to the string-concatenation of *product* and the code unit 0x0022 (QUOTATION MARK).
4. Return *product*.

Table 64: JSON Single Character Escape Sequences

Code Point	Unicode Character Name	Escape Sequence
U+0008	BACKSPACE	`\b`
U+0009	CHARACTER TABULATION	`\t`
U+000A	LINE FEED (LF)	`\n`
U+000C	FORM FEED (FF)	`\f`
U+000D	CARRIAGE RETURN (CR)	`\r`
U+0022	QUOTATION MARK	`\"`
U+005C	REVERSE SOLIDUS	`\\`

24.5.2.3 Runtime Semantics: UnicodeEscape (*C*)

The abstract operation UnicodeEscape takes a code unit argument *C* and represents it as a Unicode escape sequence.

1. Let *n* be the numeric value of *C*.
2. Assert: $n \leq$ 0xFFFF.
3. Return the string-concatenation of:
    - the code unit 0x005C (REVERSE SOLIDUS)
    - **"u"**
    - the String representation of *n*, formatted as a four-digit lowercase hexadecimal number, padded to the left with zeroes if necessary

24.5.2.4 Runtime Semantics: SerializeJSONObject (*state*, *value*)

The abstract operation SerializeJSONObject with arguments *state* and *value* serializes an object. It performs the following steps:

1. If *state*.[[Stack]] contains *value*, throw a **TypeError** exception because the structure is cyclical.
2. Append *value* to *state*.[[Stack]].

3. Let *stepback* be *state*.[[Indent]].
4. Set *state*.[[Indent]] to the string-concatenation of *state*.[[Indent]] and *state*.[[Gap]].
5. If *state*.[[PropertyList]] is not **undefined**, then
    a. Let *K* be *state*.[[PropertyList]].
6. Else,
    a. Let *K* be ? EnumerableOwnPropertyNames(*value*, key).
7. Let *partial* be a new empty List.
8. For each element *P* of *K*, do
    a. Let *strP* be ? SerializeJSONProperty(*state*, *P*, *value*).
    b. If *strP* is not **undefined**, then
        i. Let *member* be QuoteJSONString(*P*).
        ii. Set *member* to the string-concatenation of *member* and **":"**.
        iii. If *state*.[[Gap]] is not the empty String, then
            1. Set *member* to the string-concatenation of *member* and the code unit 0x0020 (SPACE).
        iv. Set *member* to the string-concatenation of *member* and *strP*.
        v. Append *member* to *partial*.
9. If *partial* is empty, then
    a. Let *final* be **"{}"**.
10. Else,
    a. If *state*.[[Gap]] is the empty String, then
        i. Let *properties* be the String value formed by concatenating all the element Strings of *partial* with each adjacent pair of Strings separated with the code unit 0x002C (COMMA). A comma is not inserted either before the first String or after the last String.
        ii. Let *final* be the string-concatenation of **"{"**, *properties*, and **"}"**.
    b. Else,
        i. Let *separator* be the string-concatenation of the code unit 0x002C (COMMA), the code unit 0x000A (LINE FEED), and *state*.[[Indent]].
        ii. Let *properties* be the String value formed by concatenating all the element Strings of *partial* with each adjacent pair of Strings separated with *separator*. The *separator* String is not inserted either before the first String or after the last String.
        iii. Let *final* be the string-concatenation of **"{"**, the code unit 0x000A (LINE FEED), *state*.[[Indent]], *properties*, the code unit 0x000A (LINE FEED), *stepback*, and **"}"**.
11. Remove the last element of *state*.[[Stack]].
12. Set *state*.[[Indent]] to *stepback*.
13. Return *final*.

24.5.2.5 Runtime Semantics: SerializeJSONArray (*state*, *value*)

The abstract operation SerializeJSONArray with arguments *state* and *value* serializes an array. It performs the following steps:

1. If *state*.[[Stack]] contains *value*, throw a **TypeError** exception because the structure is cyclical.
2. Append *value* to *state*.[[Stack]].
3. Let *stepback* be *state*.[[Indent]].
4. Set *state*.[[Indent]] to the string-concatenation of *state*.[[Indent]] and *state*.[[Gap]].
5. Let *partial* be a new empty List.
6. Let *len* be ? LengthOfArrayLike(*value*).
7. Let *index* be 0.

8. Repeat, while *index* < *len*
    a. Let *strP* be ? SerializeJSONProperty(*state*, ! ToString(*index*), *value*).
    b. If *strP* is **undefined**, then
        i. Append **"null"** to *partial*.
    c. Else,
        i. Append *strP* to *partial*.
    d. Set *index* to *index* + 1.
9. If *partial* is empty, then
    a. Let *final* be **"[]"**.
10. Else,
    a. If *state*.[[Gap]] is the empty String, then
        i. Let *properties* be the String value formed by concatenating all the element Strings of *partial* with each adjacent pair of Strings separated with the code unit 0x002C (COMMA). A comma is not inserted either before the first String or after the last String.
        ii. Let *final* be the string-concatenation of **"["**, *properties*, and **"]"**.
    b. Else,
        i. Let *separator* be the string-concatenation of the code unit 0x002C (COMMA), the code unit 0x000A (LINE FEED), and *state*.[[Indent]].
        ii. Let *properties* be the String value formed by concatenating all the element Strings of *partial* with each adjacent pair of Strings separated with *separator*. The *separator* String is not inserted either before the first String or after the last String.
        iii. Let *final* be the string-concatenation of **"["**, the code unit 0x000A (LINE FEED), *state*.[[Indent]], *properties*, the code unit 0x000A (LINE FEED), *stepback*, and **"]"**.
11. Remove the last element of *state*.[[Stack]].
12. Set *state*.[[Indent]] to *stepback*.
13. Return *final*.

NOTE The representation of arrays includes only the elements between zero and `array.length` - 1 inclusive. Properties whose keys are not array indexes are excluded from the stringification. An array is stringified as an opening LEFT SQUARE BRACKET, elements separated by COMMA, and a closing RIGHT SQUARE BRACKET.

24.5.3 JSON [@@toStringTag]

The initial value of the @@toStringTag property is the String value **"JSON"**.

This property has the attributes { [[Writable]]: **false**, [[Enumerable]]: **false**, [[Configurable]]: **true** }.

25 Control Abstraction Objects

25.1 Iteration

25.1.1 Common Iteration Interfaces

An interface is a set of property keys whose associated values match a specific specification. Any object that provides all the properties as described by an interface's specification *conforms* to that interface. An interface is not represented by a distinct object. There may be many separately implemented objects that conform to any interface. An individual object may conform to multiple interfaces.

25.1.1.1 The *Iterable* Interface

The *Iterable* interface includes the property described in Table 65:

Table 65: *Iterable* Interface Required Properties

Property	Value	Requirements
`@@iterator`	A function that returns an *Iterator* object.	The returned object must conform to the *Iterator* interface.

25.1.1.2 The *Iterator* Interface

An object that implements the *Iterator* interface must include the property in Table 66. Such objects may also implement the properties in Table 67.

Table 66: *Iterator* Interface Required Properties

Property	Value	Requirements
"next"	A function that returns an *IteratorResult* object.	The returned object must conform to the *IteratorResult* interface. If a previous call to the `next` method of an *Iterator* has returned an *IteratorResult* object whose **"done"** property is **true**, then all subsequent calls to the `next` method of that object should also return an *IteratorResult* object whose **"done"** property is **true**. However, this requirement is not enforced.

NOTE 1 Arguments may be passed to the next function but their interpretation and validity is dependent upon the target *Iterator*. The for-of statement and other common users of *Iterators* do not pass any arguments, so *Iterator* objects that expect to be used in such a manner must be prepared to deal with being called with no arguments.

Table 67: *Iterator* Interface Optional Properties

Property	Value	Requirements
"return"	A function that returns an *IteratorResult* object.	The returned object must conform to the *IteratorResult* interface. Invoking this method notifies the *Iterator* object that the caller does not intend to make any more `next` method calls to the *Iterator*. The returned *IteratorResult* object will typically have a **"done"** property whose value is **true**, and a **"value"** property with the value passed as the argument of the `return` method. However, this requirement is not enforced.
"throw"	A function that returns an *IteratorResult* object.	The returned object must conform to the *IteratorResult* interface. Invoking this method notifies the *Iterator* object that the caller has detected an error condition. The argument may be used to identify the error condition and typically will be an exception object. A typical response is to `throw` the value passed as the argument. If the method does not `throw`, the returned *IteratorResult* object will typically have a **"done"** property whose value is **true**.

NOTE 2 Typically callers of these methods should check for their existence before invoking them. Certain ECMAScript language features including `for-of`, `yield*`, and array destructuring call these methods after performing an existence check. Most ECMAScript library functions that accept *Iterable* objects as arguments also conditionally call them.

25.1.1.3 The *AsyncIterable* Interface

The *AsyncIterable* interface includes the properties described in Table 68:

Table 68: *AsyncIterable* Interface Required Properties

Property	Value	Requirements
`@@asyncIterator`	A function that returns an *AsyncIterator* object.	The returned object must conform to the *AsyncIterator* interface.

25.1.1.4 The *AsyncIterator* Interface

An object that implements the *AsyncIterator* interface must include the properties in Table 69. Such objects may also implement the properties in Table 70.

Table 69: *AsyncIterator* Interface Required Properties

Property	Value	Requirements
"next"	A function that returns a promise for an *IteratorResult* object.	The returned promise, when fulfilled, must fulfill with an object which conforms to the *IteratorResult* interface. If a previous call to the **`next`** method of an *AsyncIterator* has returned a promise for an *IteratorResult* object whose **"done"** property is **true**, then all subsequent calls to the **`next`** method of that object should also return a promise for an *IteratorResult* object whose **"done"** property is **true**. However, this requirement is not enforced. Additionally, the *IteratorResult* object that serves as a fulfillment value should have a **"value"** property whose value is not a promise (or "thenable"). However, this requirement is also not enforced.

NOTE 1 Arguments may be passed to the next function but their interpretation and validity is dependent upon the target *AsyncIterator*. The **`for-await-of`** statement and other common users of *AsyncIterators* do not pass any arguments, so *AsyncIterator* objects that expect to be used in such a manner must be prepared to deal with being called with no arguments.

Table 70: *AsyncIterator* Interface Optional Properties

Property	Value	Requirements
"return"	A function that returns a promise for an *IteratorResult* object.	The returned promise, when fulfilled, must fulfill with an object which conforms to the *IteratorResult* interface. Invoking this method notifies the *AsyncIterator* object that the caller does not intend to make any more `next` method calls to the *AsyncIterator*. The returned promise will fulfill with an *IteratorResult* object which will typically have a **"done"** property whose value is **true**, and a **"value"** property with the value passed as the argument of the `return` method. However, this requirement is not enforced. Additionally, the *IteratorResult* object that serves as a fulfillment value should have a **"value"** property whose value is not a promise (or "thenable"). If the argument value is used in the typical manner, then if it is a rejected promise, a promise rejected with the same reason should be returned; if it is a fulfilled promise, then its fulfillment value should be used as the **"value"** property of the returned promise's *IteratorResult* object fulfillment value. However, these requirements are also not enforced.
"throw"	A function that returns a promise for an *IteratorResult* object.	The returned promise, when fulfilled, must fulfill with an object which conforms to the *IteratorResult* interface. Invoking this method notifies the *AsyncIterator* object that the caller has detected an error condition. The argument may be used to identify the error condition and typically will be an exception object. A typical response is to return a rejected promise which rejects with the value passed as the argument. If the returned promise is fulfilled, the *IteratorResult* fulfillment value will typically have a **"done"** property whose value is **true**. Additionally, it should have a **"value"** property whose value is not a promise (or "thenable"), but this requirement is not enforced.

NOTE 2 Typically callers of these methods should check for their existence before invoking them. Certain ECMAScript language features including `for-await-of` and `yield*` call these methods after performing an existence check.

25.1.1.5 The *IteratorResult* Interface

The *IteratorResult* interface includes the properties listed in Table 71:

Table 71: *IteratorResult* Interface Properties

Property	Value	Requirements
"done"	Either **true** or **false**.	This is the result status of an *iterator* `next` method call. If the end of the iterator was reached **"done"** is **true**. If the end was not reached **"done"** is **false** and a value is available. If a **"done"** property (either own or inherited) does not exist, it is consider to have the value **false**.
"value"	Any ECMAScript language value.	If done is **false**, this is the current iteration element value. If done is **true**, this is the return value of the iterator, if it supplied one. If the iterator does not have a return value, **"value"** is **undefined**. In that case, the **"value"** property may be absent from the conforming object if it does not inherit an explicit **"value"** property.

25.1.2 The %IteratorPrototype% Object

The *%IteratorPrototype%* object:

- has a [[Prototype]] internal slot whose value is %Object.prototype%.
- is an ordinary object.

NOTE All objects defined in this specification that implement the Iterator interface also inherit from %IteratorPrototype%. ECMAScript code may also define objects that inherit from %IteratorPrototype%. The %IteratorPrototype% object provides a place where additional methods that are applicable to all iterator objects may be added.

The following expression is one way that ECMAScript code can access the %IteratorPrototype% object:

```
Object.getPrototypeOf(Object.getPrototypeOf([][Symbol.iterator]()))
```

25.1.2.1 %IteratorPrototype% [@@iterator] ( )

The following steps are taken:

1. Return the **this** value.

The value of the **"name"** property of this function is **"[Symbol.iterator]"**.

25.1.3 The %AsyncIteratorPrototype% Object

The *%AsyncIteratorPrototype%* object:

- has a [[Prototype]] internal slot whose value is %Object.prototype%.
- is an ordinary object.

NOTE All objects defined in this specification that implement the AsyncIterator interface also inherit from %AsyncIteratorPrototype%. ECMAScript code may also define objects that inherit from %AsyncIteratorPrototype%. The %AsyncIteratorPrototype% object provides a place where additional methods that are applicable to all async iterator objects may be added.

25.1.3.1 %AsyncIteratorPrototype% [@@asyncIterator] ( )

The following steps are taken:

1. Return the **this** value.

The value of the **"name"** property of this function is **"[Symbol.asyncIterator]"**.

25.1.4 Async-from-Sync Iterator Objects

An Async-from-Sync Iterator object is an async iterator that adapts a specific synchronous iterator. There is not a named constructor for Async-from-Sync Iterator objects. Instead, Async-from-Sync iterator objects are created by the CreateAsyncFromSyncIterator abstract operation as needed.

25.1.4.1 CreateAsyncFromSyncIterator (*syncIteratorRecord*)

The abstract operation CreateAsyncFromSyncIterator is used to create an async iterator Record from a synchronous iterator Record. It performs the following steps:

1. Let *asyncIterator* be ! OrdinaryObjectCreate(%AsyncFromSyncIteratorPrototype%, « [[SyncIteratorRecord]] »).
2. Set *asyncIterator*.[[SyncIteratorRecord]] to *syncIteratorRecord*.
3. Let *nextMethod* be ! Get(*asyncIterator*, **"next"**).
4. Let *iteratorRecord* be the Record { [[Iterator]]: *asyncIterator*, [[NextMethod]]: *nextMethod*, [[Done]]: **false** }.
5. Return *iteratorRecord*.

25.1.4.2 The %AsyncFromSyncIteratorPrototype% Object

The *%AsyncFromSyncIteratorPrototype%* object:

- has properties that are inherited by all Async-from-Sync Iterator Objects.
- is an ordinary object.
- has a [[Prototype]] internal slot whose value is %AsyncIteratorPrototype%.
- has the following properties:

25.1.4.2.1 %AsyncFromSyncIteratorPrototype%.next (*value*)

1. Let *O* be the **this** value.
2. Assert: Type(*O*) is Object and *O* has a [[SyncIteratorRecord]] internal slot.
3. Let *promiseCapability* be ! NewPromiseCapability(%Promise%).
4. Let *syncIteratorRecord* be *O*.[[SyncIteratorRecord]].
5. Let *result* be IteratorNext(*syncIteratorRecord*, *value*).
6. IfAbruptRejectPromise(*result*, *promiseCapability*).
7. Return ! AsyncFromSyncIteratorContinuation(*result*, *promiseCapability*).

25.1.4.2.2 %AsyncFromSyncIteratorPrototype%.return (*value*)

1. Let *O* be the **this** value.
2. Assert: Type(*O*) is Object and *O* has a [[SyncIteratorRecord]] internal slot.
3. Let *promiseCapability* be ! NewPromiseCapability(%Promise%).
4. Let *syncIterator* be *O*.[[SyncIteratorRecord]].[[Iterator]].
5. Let *return* be GetMethod(*syncIterator*, **"return"**).
6. IfAbruptRejectPromise(*return*, *promiseCapability*).
7. If *return* is **undefined**, then
    a. Let *iterResult* be ! CreateIterResultObject(*value*, **true**).
    b. Perform ! Call(*promiseCapability*.[[Resolve]], **undefined**, « *iterResult* »).
    c. Return *promiseCapability*.[[Promise]].
8. Let *result* be Call(*return*, *syncIterator*, « *value* »).
9. IfAbruptRejectPromise(*result*, *promiseCapability*).
10. If Type(*result*) is not Object, then
    a. Perform ! Call(*promiseCapability*.[[Reject]], **undefined**, « a newly created **TypeError** object »).
    b. Return *promiseCapability*.[[Promise]].
11. Return ! AsyncFromSyncIteratorContinuation(*result*, *promiseCapability*).

25.1.4.2.3 %AsyncFromSyncIteratorPrototype%.throw (*value*)

1. Let *O* be the **this** value.
2. Assert: Type(*O*) is Object and *O* has a [[SyncIteratorRecord]] internal slot.
3. Let *promiseCapability* be ! NewPromiseCapability(%Promise%).
4. Let *syncIterator* be *O*.[[SyncIteratorRecord]].[[Iterator]].
5. Let *throw* be GetMethod(*syncIterator*, **"throw"**).
6. IfAbruptRejectPromise(*throw*, *promiseCapability*).
7. If *throw* is **undefined**, then
    a. Perform ! Call(*promiseCapability*.[[Reject]], **undefined**, « *value* »).
    b. Return *promiseCapability*.[[Promise]].
8. Let *result* be Call(*throw*, *syncIterator*, « *value* »).
9. IfAbruptRejectPromise(*result*, *promiseCapability*).
10. If Type(*result*) is not Object, then
    a. Perform ! Call(*promiseCapability*.[[Reject]], **undefined**, « a newly created **TypeError** object »).
    b. Return *promiseCapability*.[[Promise]].
11. Return ! AsyncFromSyncIteratorContinuation(*result*, *promiseCapability*).

25.1.4.2.4 Async-from-Sync Iterator Value Unwrap Functions

An async-from-sync iterator value unwrap function is an anonymous built-in function that is used by AsyncFromSyncIteratorContinuation when processing the **"value"** property of an *IteratorResult* object, in order to wait for its value if it is a promise and re-package the result in a new "unwrapped" *IteratorResult* object. Each async-from-sync iterator value unwrap function has a [[Done]] internal slot.

When an async-from-sync iterator value unwrap function is called with argument *value*, the following steps are taken:

1. Let *F* be the active function object.
2. Return ! CreateIterResultObject(*value*, *F*.[[Done]]).

25.1.4.3 Properties of Async-from-Sync Iterator Instances

Async-from-Sync Iterator instances are ordinary objects that inherit properties from the %AsyncFromSyncIteratorPrototype% intrinsic object. Async-from-Sync Iterator instances are initially created with the internal slots listed in Table 72. Async-from-Sync Iterator instances are not directly observable from ECMAScript code.

Table 72: Internal Slots of Async-from-Sync Iterator Instances

Internal Slot	Description
[[SyncIteratorRecord]]	A Record, of the type returned by GetIterator, representing the original synchronous iterator which is being adapted.

25.1.4.4 AsyncFromSyncIteratorContinuation (*result*, *promiseCapability*)

1. Let *done* be IteratorComplete(*result*).
2. IfAbruptRejectPromise(*done*, *promiseCapability*).
3. Let *value* be IteratorValue(*result*).
4. IfAbruptRejectPromise(*value*, *promiseCapability*).
5. Let *valueWrapper* be PromiseResolve(%Promise%, *value*).
6. IfAbruptRejectPromise(*valueWrapper*, *promiseCapability*).
7. Let *steps* be the algorithm steps defined in Async-from-Sync Iterator Value Unwrap Functions.
8. Let *onFulfilled* be ! CreateBuiltinFunction(*steps*, « [[Done]] »).
9. Set *onFulfilled*.[[Done]] to *done*.
10. Perform ! PerformPromiseThen(*valueWrapper*, *onFulfilled*, **undefined**, *promiseCapability*).
11. Return *promiseCapability*.[[Promise]].

25.2 GeneratorFunction Objects

GeneratorFunction objects are functions that are usually created by evaluating *GeneratorDeclaration*s, *GeneratorExpression*s, and *GeneratorMethod*s. They may also be created by calling the %GeneratorFunction% intrinsic.

Figure 5 (Informative): Generator Objects Relationships

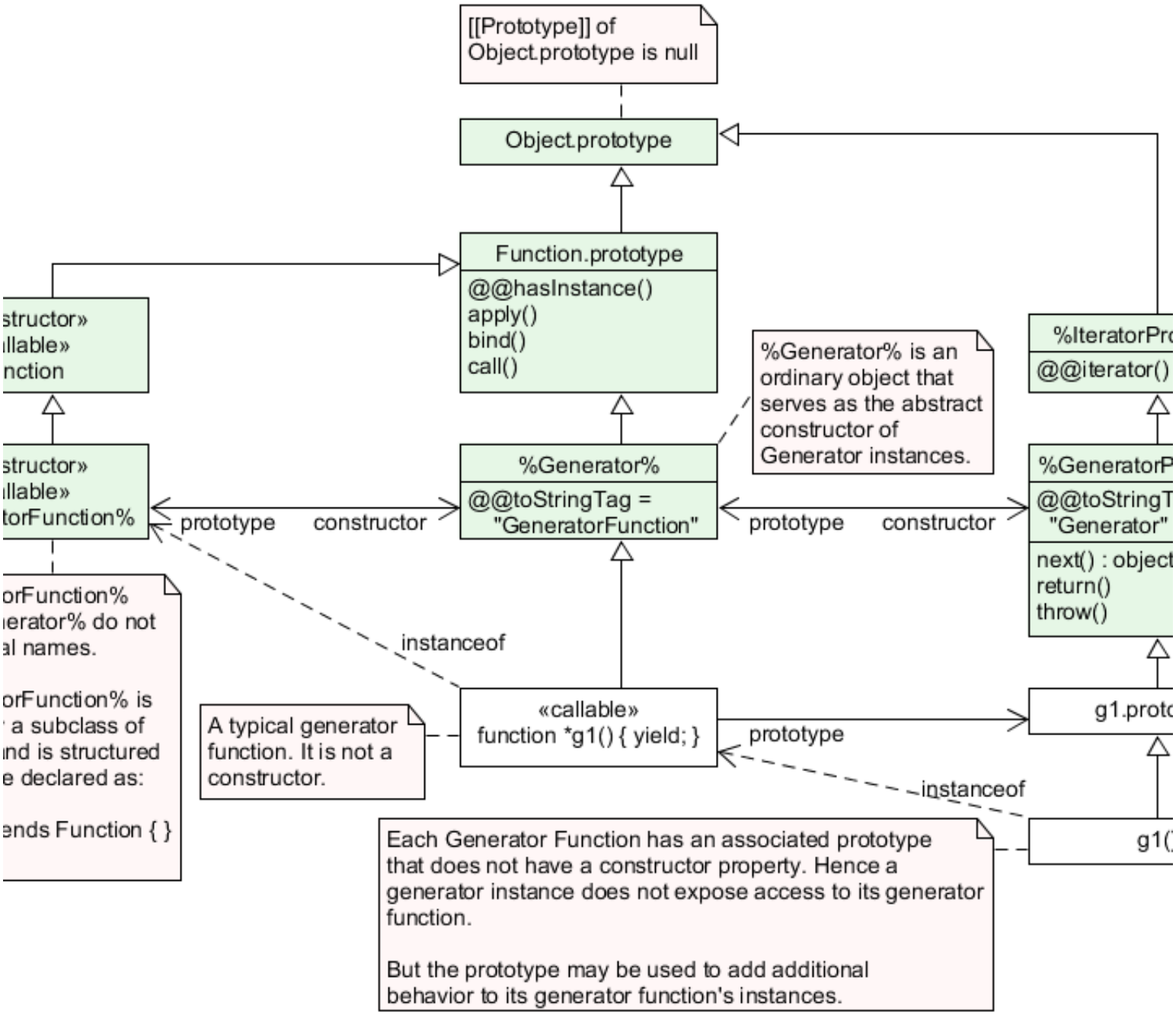

25.2.1 The GeneratorFunction Constructor

The GeneratorFunction constructor:

- is the intrinsic object *%GeneratorFunction%*.
- creates and initializes a new GeneratorFunction object when called as a function rather than as a constructor. Thus the function call **`GeneratorFunction (…)`** is equivalent to the object creation expression **`new GeneratorFunction (…)`** with the same arguments.
- is designed to be subclassable. It may be used as the value of an **`extends`** clause of a class definition. Subclass constructors that intend to inherit the specified **`GeneratorFunction`** behaviour must include a **`super`** call to the **`GeneratorFunction`** constructor to create and initialize subclass instances with the internal

slots necessary for built-in GeneratorFunction behaviour. All ECMAScript syntactic forms for defining generator function objects create direct instances of **`GeneratorFunction`**. There is no syntactic means to create instances of **`GeneratorFunction`** subclasses.

25.2.1.1 GeneratorFunction (*p1*, *p2*, … , *pn*, *body*)

The last argument specifies the body (executable code) of a generator function; any preceding arguments specify formal parameters.

When the **`GeneratorFunction`** function is called with some arguments *p1*, *p2*, … , *pn*, *body* (where *n* might be 0, that is, there are no "*p*" arguments, and where *body* might also not be provided), the following steps are taken:

1. Let *C* be the active function object.
2. Let *args* be the *argumentsList* that was passed to this function by [[Call]] or [[Construct]].
3. Return ? CreateDynamicFunction(*C*, NewTarget, generator, *args*).

NOTE See NOTE for 19.2.1.1.

25.2.2 Properties of the GeneratorFunction Constructor

The GeneratorFunction constructor:

- is a standard built-in function object that inherits from the **`Function`** constructor.
- has a [[Prototype]] internal slot whose value is %Function%.
- has a **"name"** property whose value is **"GeneratorFunction"**.
- has the following properties:

25.2.2.1 GeneratorFunction.length

This is a data property with a value of 1. This property has the attributes { [[Writable]]: **false**, [[Enumerable]]: **false**, [[Configurable]]: **true** }.

25.2.2.2 GeneratorFunction.prototype

The initial value of **`GeneratorFunction.prototype`** is %Generator%.

This property has the attributes { [[Writable]]: **false**, [[Enumerable]]: **false**, [[Configurable]]: **false** }.

25.2.3 Properties of the GeneratorFunction Prototype Object

The GeneratorFunction prototype object:

- is an ordinary object.
- is not a function object and does not have an [[ECMAScriptCode]] internal slot or any other of the internal slots listed in Table 27 or Table 73.
- is the value of the **"prototype"** property of %GeneratorFunction%.
- is the intrinsic object *%Generator%* (see Figure 2).
- has a [[Prototype]] internal slot whose value is %Function.prototype%.

25.2.3.1 GeneratorFunction.prototype.constructor

The initial value of **`GeneratorFunction.prototype.constructor`** is %GeneratorFunction%.

This property has the attributes { [[Writable]]: **false**, [[Enumerable]]: **false**, [[Configurable]]: **true** }.

25.2.3.2 GeneratorFunction.prototype.prototype

The value of **`GeneratorFunction.prototype.prototype`** is the %Generator.prototype% intrinsic object.

This property has the attributes { [[Writable]]: **false**, [[Enumerable]]: **false**, [[Configurable]]: **true** }.

25.2.3.3 GeneratorFunction.prototype [@@toStringTag]

The initial value of the @@toStringTag property is the String value **"GeneratorFunction"**.

This property has the attributes { [[Writable]]: **false**, [[Enumerable]]: **false**, [[Configurable]]: **true** }.

25.2.4 GeneratorFunction Instances

Every GeneratorFunction instance is an ECMAScript function object and has the internal slots listed in Table 27. The value of the [[IsClassConstructor]] internal slot for all such instances is **false**.

Each GeneratorFunction instance has the following own properties:

25.2.4.1 length

The specification for the **"length"** property of Function instances given in 19.2.4.1 also applies to GeneratorFunction instances.

25.2.4.2 name

The specification for the **"name"** property of Function instances given in 19.2.4.2 also applies to GeneratorFunction instances.

25.2.4.3 prototype

Whenever a GeneratorFunction instance is created another ordinary object is also created and is the initial value of the generator function's **"prototype"** property. The value of the prototype property is used to initialize the [[Prototype]] internal slot of a newly created Generator object when the generator function object is invoked using [[Call]].

This property has the attributes { [[Writable]]: **true**, [[Enumerable]]: **false**, [[Configurable]]: **false** }.

> NOTE Unlike Function instances, the object that is the value of the a GeneratorFunction's **"prototype"** property does not have a **"constructor"** property whose value is the GeneratorFunction instance.

25.3 AsyncGeneratorFunction Objects

AsyncGeneratorFunction objects are functions that are usually created by evaluating *AsyncGeneratorDeclaration*,

AsyncGeneratorExpression, and *AsyncGeneratorMethod* syntactic productions. They may also be created by calling the %AsyncGeneratorFunction% intrinsic.

25.3.1 The AsyncGeneratorFunction Constructor

The AsyncGeneratorFunction constructor:

- is the intrinsic object *%AsyncGeneratorFunction%*.
- creates and initializes a new AsyncGeneratorFunction object when called as a function rather than as a constructor. Thus the function call **`AsyncGeneratorFunction (...)`** is equivalent to the object creation expression **`new AsyncGeneratorFunction (...)`** with the same arguments.
- is designed to be subclassable. It may be used as the value of an **`extends`** clause of a class definition. Subclass constructors that intend to inherit the specified **`AsyncGeneratorFunction`** behaviour must include a **`super`** call to the **`AsyncGeneratorFunction`** constructor to create and initialize subclass instances with the internal slots necessary for built-in AsyncGeneratorFunction behaviour. All ECMAScript syntactic forms for defining async generator function objects create direct instances of **`AsyncGeneratorFunction`**. There is no syntactic means to create instances of **`AsyncGeneratorFunction`** subclasses.

25.3.1.1 AsyncGeneratorFunction (*p1*, *p2*, … , *pn*, *body*)

The last argument specifies the body (executable code) of an async generator function; any preceding arguments specify formal parameters.

When the **`AsyncGeneratorFunction`** function is called with some arguments *p1*, *p2*, … , *pn*, *body* (where *n* might be 0, that is, there are no "*p*" arguments, and where *body* might also not be provided), the following steps are taken:

1. Let *C* be the active function object.
2. Let *args* be the *argumentsList* that was passed to this function by [[Call]] or [[Construct]].
3. Return ? CreateDynamicFunction(*C*, NewTarget, asyncGenerator, *args*).

NOTE See NOTE for 19.2.1.1.

25.3.2 Properties of the AsyncGeneratorFunction Constructor

The AsyncGeneratorFunction constructor:

- is a standard built-in function object that inherits from the **`Function`** constructor.
- has a [[Prototype]] internal slot whose value is %Function%.
- has a **"name"** property whose value is **"AsyncGeneratorFunction"**.
- has the following properties:

25.3.2.1 AsyncGeneratorFunction.length

This is a data property with a value of 1. This property has the attributes { [[Writable]]: **false**, [[Enumerable]]: **false**, [[Configurable]]: **true** }.

25.3.2.2 AsyncGeneratorFunction.prototype

The initial value of **`AsyncGeneratorFunction.prototype`** is the intrinsic object *%AsyncGenerator%*.

This property has the attributes { [[Writable]]: **false**, [[Enumerable]]: **false**, [[Configurable]]: **false** }.

25.3.3 Properties of the AsyncGeneratorFunction Prototype Object

The AsyncGeneratorFunction prototype object:

- is an ordinary object.
- is not a function object and does not have an [[ECMAScriptCode]] internal slot or any other of the internal slots listed in Table 27 or Table 74.
- is the value of the **"prototype"** property of %AsyncGeneratorFunction%.
- is %AsyncGenerator%.
- has a [[Prototype]] internal slot whose value is %Function.prototype%.

25.3.3.1 AsyncGeneratorFunction.prototype.constructor

The initial value of **`AsyncGeneratorFunction.prototype.constructor`** is %AsyncGeneratorFunction%.

This property has the attributes { [[Writable]]: **false**, [[Enumerable]]: **false**, [[Configurable]]: **true** }.

25.3.3.2 AsyncGeneratorFunction.prototype.prototype

The value of **`AsyncGeneratorFunction.prototype.prototype`** is the %AsyncGenerator.prototype% intrinsic object.

This property has the attributes { [[Writable]]: **false**, [[Enumerable]]: **false**, [[Configurable]]: **true** }.

25.3.3.3 AsyncGeneratorFunction.prototype [@@toStringTag]

The initial value of the @@toStringTag property is the String value **"AsyncGeneratorFunction"**.

This property has the attributes { [[Writable]]: **false**, [[Enumerable]]: **false**, [[Configurable]]: **true** }.

25.3.4 AsyncGeneratorFunction Instances

Every AsyncGeneratorFunction instance is an ECMAScript function object and has the internal slots listed in Table 27. The value of the [[IsClassConstructor]] internal slot for all such instances is **false**.

Each AsyncGeneratorFunction instance has the following own properties:

25.3.4.1 length

The value of the **"length"** property is an integer that indicates the typical number of arguments expected by the AsyncGeneratorFunction. However, the language permits the function to be invoked with some other number of arguments. The behaviour of an AsyncGeneratorFunction when invoked on a number of arguments other than the number specified by its **"length"** property depends on the function.

This property has the attributes { [[Writable]]: **false**, [[Enumerable]]: **false**, [[Configurable]]: **true** }.

25.3.4.2 name

The specification for the **"name"** property of Function instances given in 19.2.4.2 also applies to AsyncGeneratorFunction instances.

25.3.4.3 prototype

Whenever an AsyncGeneratorFunction instance is created another ordinary object is also created and is the initial value of the async generator function's **"prototype"** property. The value of the prototype property is used to initialize the [[Prototype]] internal slot of a newly created AsyncGenerator object when the generator function object is invoked using [[Call]].

This property has the attributes { [[Writable]]: **true**, [[Enumerable]]: **false**, [[Configurable]]: **false** }.

> NOTE Unlike function instances, the object that is the value of the an AsyncGeneratorFunction's **"prototype"** property does not have a **"constructor"** property whose value is the AsyncGeneratorFunction instance.

25.4 Generator Objects

A Generator object is an instance of a generator function and conforms to both the *Iterator* and *Iterable* interfaces.

Generator instances directly inherit properties from the object that is the value of the **"prototype"** property of the Generator function that created the instance. Generator instances indirectly inherit properties from the Generator Prototype intrinsic, %Generator.prototype%.

25.4.1 Properties of the Generator Prototype Object

The Generator prototype object:

- is the intrinsic object *%GeneratorPrototype%*.
- is the initial value of the **"prototype"** property of %Generator% (the **`GeneratorFunction.prototype`**).
- is an ordinary object.
- is not a Generator instance and does not have a [[GeneratorState]] internal slot.
- has a [[Prototype]] internal slot whose value is %IteratorPrototype%.
- has properties that are indirectly inherited by all Generator instances.

25.4.1.1 Generator.prototype.constructor

The initial value of **`Generator.prototype.constructor`** is %Generator%.

This property has the attributes { [[Writable]]: **false**, [[Enumerable]]: **false**, [[Configurable]]: **true** }.

25.4.1.2 Generator.prototype.next (*value*)

The **`next`** method performs the following steps:

1. Let *g* be the **this** value.
2. Return ? GeneratorResume(*g*, *value*).

25.4.1.3 Generator.prototype.return (*value*)

The `return` method performs the following steps:

1. Let *g* be the **this** value.
2. Let *C* be Completion { [[Type]]: return, [[Value]]: *value*, [[Target]]: empty }.
3. Return ? GeneratorResumeAbrupt(*g*, *C*).

25.4.1.4 Generator.prototype.throw (*exception*)

The `throw` method performs the following steps:

1. Let *g* be the **this** value.
2. Let *C* be ThrowCompletion(*exception*).
3. Return ? GeneratorResumeAbrupt(*g*, *C*).

25.4.1.5 Generator.prototype [@@toStringTag]

The initial value of the @@toStringTag property is the String value **"Generator"**.

This property has the attributes { [[Writable]]: **false**, [[Enumerable]]: **false**, [[Configurable]]: **true** }.

25.4.2 Properties of Generator Instances

Generator instances are initially created with the internal slots described in Table 73.

Table 73: Internal Slots of Generator Instances

Internal Slot	Description
[[GeneratorState]]	The current execution state of the generator. The possible values are: **undefined**, suspendedStart, suspendedYield, executing, and completed.
[[GeneratorContext]]	The execution context that is used when executing the code of this generator.

25.4.3 Generator Abstract Operations

25.4.3.1 GeneratorStart (*generator*, *generatorBody*)

The abstract operation GeneratorStart with arguments *generator* and *generatorBody* performs the following steps:

1. Assert: The value of *generator*.[[GeneratorState]] is **undefined**.
2. Let *genContext* be the running execution context.
3. Set the Generator component of *genContext* to *generator*.
4. Set the code evaluation state of *genContext* such that when evaluation is resumed for that execution context the following steps will be performed:
    a. Let *result* be the result of evaluating *generatorBody*.

b. Assert: If we return here, the generator either threw an exception or performed either an implicit or explicit return.
c. Remove *genContext* from the execution context stack and restore the execution context that is at the top of the execution context stack as the running execution context.
d. Set *generator*.[[GeneratorState]] to completed.
e. Once a generator enters the completed state it never leaves it and its associated execution context is never resumed. Any execution state associated with *generator* can be discarded at this point.
f. If *result*.[[Type]] is normal, let *resultValue* be **undefined**.
g. Else if *result*.[[Type]] is return, let *resultValue* be *result*.[[Value]].
h. Else,
    i. Assert: *result*.[[Type]] is throw.
    ii. Return Completion(*result*).
i. Return CreateIterResultObject(*resultValue*, **true**).

5. Set *generator*.[[GeneratorContext]] to *genContext*.
6. Set *generator*.[[GeneratorState]] to suspendedStart.
7. Return NormalCompletion(**undefined**).

25.4.3.2 GeneratorValidate (*generator*)

The abstract operation GeneratorValidate with argument *generator* performs the following steps:

1. Perform ? RequireInternalSlot(*generator*, [[GeneratorState]]).
2. Assert: *generator* also has a [[GeneratorContext]] internal slot.
3. Let *state* be *generator*.[[GeneratorState]].
4. If *state* is executing, throw a **TypeError** exception.
5. Return *state*.

25.4.3.3 GeneratorResume (*generator*, *value*)

The abstract operation GeneratorResume with arguments *generator* and *value* performs the following steps:

1. Let *state* be ? GeneratorValidate(*generator*).
2. If *state* is completed, return CreateIterResultObject(**undefined**, **true**).
3. Assert: *state* is either suspendedStart or suspendedYield.
4. Let *genContext* be *generator*.[[GeneratorContext]].
5. Let *methodContext* be the running execution context.
6. Suspend *methodContext*.
7. Set *generator*.[[GeneratorState]] to executing.
8. Push *genContext* onto the execution context stack; *genContext* is now the running execution context.
9. Resume the suspended evaluation of *genContext* using NormalCompletion(*value*) as the result of the operation that suspended it. Let *result* be the value returned by the resumed computation.
10. Assert: When we return here, *genContext* has already been removed from the execution context stack and *methodContext* is the currently running execution context.
11. Return Completion(*result*).

25.4.3.4 GeneratorResumeAbrupt (*generator*, *abruptCompletion*)

The abstract operation GeneratorResumeAbrupt with arguments *generator* and *abruptCompletion* performs the

following steps:

1. Let *state* be ? GeneratorValidate(*generator*).
2. If *state* is suspendedStart, then
    a. Set *generator*.[[GeneratorState]] to completed.
    b. Once a generator enters the completed state it never leaves it and its associated execution context is never resumed. Any execution state associated with *generator* can be discarded at this point.
    c. Set *state* to completed.
3. If *state* is completed, then
    a. If *abruptCompletion*.[[Type]] is return, then
        i. Return CreateIterResultObject(*abruptCompletion*.[[Value]], **true**).
    b. Return Completion(*abruptCompletion*).
4. Assert: *state* is suspendedYield.
5. Let *genContext* be *generator*.[[GeneratorContext]].
6. Let *methodContext* be the running execution context.
7. Suspend *methodContext*.
8. Set *generator*.[[GeneratorState]] to executing.
9. Push *genContext* onto the execution context stack; *genContext* is now the running execution context.
10. Resume the suspended evaluation of *genContext* using *abruptCompletion* as the result of the operation that suspended it. Let *result* be the completion record returned by the resumed computation.
11. Assert: When we return here, *genContext* has already been removed from the execution context stack and *methodContext* is the currently running execution context.
12. Return Completion(*result*).

25.4.3.5 GetGeneratorKind ( )

1. Let *genContext* be the running execution context.
2. If *genContext* does not have a Generator component, return non-generator.
3. Let *generator* be the Generator component of *genContext*.
4. If *generator* has an [[AsyncGeneratorState]] internal slot, return async.
5. Else, return sync.

25.4.3.6 GeneratorYield (*iterNextObj*)

The abstract operation GeneratorYield with argument *iterNextObj* performs the following steps:

1. Assert: *iterNextObj* is an Object that implements the *IteratorResult* interface.
2. Let *genContext* be the running execution context.
3. Assert: *genContext* is the execution context of a generator.
4. Let *generator* be the value of the Generator component of *genContext*.
5. Assert: GetGeneratorKind() is sync.
6. Set *generator*.[[GeneratorState]] to suspendedYield.
7. Remove *genContext* from the execution context stack and restore the execution context that is at the top of the execution context stack as the running execution context.
8. Set the code evaluation state of *genContext* such that when evaluation is resumed with a Completion *resumptionValue* the following steps will be performed:
    a. Return *resumptionValue*.
    b. NOTE: This returns to the evaluation of the *YieldExpression* that originally called this abstract operation.

9. Return NormalCompletion(*iterNextObj*).
10. NOTE: This returns to the evaluation of the operation that had most previously resumed evaluation of *genContext*.

25.5 AsyncGenerator Objects

An AsyncGenerator object is an instance of an async generator function and conforms to both the AsyncIterator and AsyncIterable interfaces.

AsyncGenerator instances directly inherit properties from the object that is the value of the **"prototype"** property of the AsyncGenerator function that created the instance. AsyncGenerator instances indirectly inherit properties from the AsyncGenerator Prototype intrinsic, %AsyncGenerator.prototype%.

25.5.1 Properties of the AsyncGenerator Prototype Object

The AsyncGenerator prototype object:

- is the intrinsic object *%AsyncGeneratorPrototype%*.
- is the initial value of the **"prototype"** property of %AsyncGenerator% (the **`AsyncGeneratorFunction.prototype`**).
- is an ordinary object.
- is not an AsyncGenerator instance and does not have an [[AsyncGeneratorState]] internal slot.
- has a [[Prototype]] internal slot whose value is %AsyncIteratorPrototype%.
- has properties that are indirectly inherited by all AsyncGenerator instances.

25.5.1.1 AsyncGenerator.prototype.constructor

The initial value of **`AsyncGenerator.prototype.constructor`** is %AsyncGenerator%.

This property has the attributes { [[Writable]]: **false**, [[Enumerable]]: **false**, [[Configurable]]: **true** }.

25.5.1.2 AsyncGenerator.prototype.next (*value*)

1. Let *generator* be the **this** value.
2. Let *completion* be NormalCompletion(*value*).
3. Return ! AsyncGeneratorEnqueue(*generator*, *completion*).

25.5.1.3 AsyncGenerator.prototype.return (*value*)

1. Let *generator* be the **this** value.
2. Let *completion* be Completion { [[Type]]: return, [[Value]]: *value*, [[Target]]: empty }.
3. Return ! AsyncGeneratorEnqueue(*generator*, *completion*).

25.5.1.4 AsyncGenerator.prototype.throw (*exception*)

1. Let *generator* be the **this** value.
2. Let *completion* be ThrowCompletion(*exception*).
3. Return ! AsyncGeneratorEnqueue(*generator*, *completion*).

25.5.1.5 AsyncGenerator.prototype [@@toStringTag]

The initial value of the @@toStringTag property is the String value **"AsyncGenerator"**.

This property has the attributes { [[Writable]]: **false**, [[Enumerable]]: **false**, [[Configurable]]: **true** }.

25.5.2 Properties of AsyncGenerator Instances

AsyncGenerator instances are initially created with the internal slots described below:

Table 74: Internal Slots of AsyncGenerator Instances

Internal Slot	Description
[[AsyncGeneratorState]]	The current execution state of the async generator. The possible values are: **undefined**, suspendedStart, suspendedYield, executing, awaiting-return, and completed.
[[AsyncGeneratorContext]]	The execution context that is used when executing the code of this async generator.
[[AsyncGeneratorQueue]]	A List of AsyncGeneratorRequest records which represent requests to resume the async generator.

25.5.3 AsyncGenerator Abstract Operations

25.5.3.1 AsyncGeneratorRequest Records

The AsyncGeneratorRequest is a Record value used to store information about how an async generator should be resumed and contains capabilities for fulfilling or rejecting the corresponding promise.

They have the following fields:

Table 75: AsyncGeneratorRequest Record Fields

Field Name	Value	Meaning
[[Completion]]	A Completion record	The completion which should be used to resume the async generator.
[[Capability]]	A PromiseCapability record	The promise capabilities associated with this request.

25.5.3.2 AsyncGeneratorStart (*generator*, *generatorBody*)

1. Assert: *generator* is an AsyncGenerator instance.
2. Assert: *generator*.[[AsyncGeneratorState]] is **undefined**.
3. Let *genContext* be the running execution context.
4. Set the Generator component of *genContext* to *generator*.
5. Set the code evaluation state of *genContext* such that when evaluation is resumed for that execution context the following steps will be performed:
    a. Let *result* be the result of evaluating *generatorBody*.
    b. Assert: If we return here, the async generator either threw an exception or performed either an implicit or explicit return.
    c. Remove *genContext* from the execution context stack and restore the execution context that is at the top

of the execution context stack as the running execution context.

d. Set *generator*.[[AsyncGeneratorState]] to completed.

e. If *result* is a normal completion, let *resultValue* be **undefined**.

f. Else,

i. Let *resultValue* be *result*.[[Value]].

ii. If *result*.[[Type]] is not return, then

1. Return ! AsyncGeneratorReject(*generator*, *resultValue*).

g. Return ! AsyncGeneratorResolve(*generator*, *resultValue*, **true**).

6. Set *generator*.[[AsyncGeneratorContext]] to *genContext*.
7. Set *generator*.[[AsyncGeneratorState]] to suspendedStart.
8. Set *generator*.[[AsyncGeneratorQueue]] to a new empty List.
9. Return **undefined**.

25.5.3.3 AsyncGeneratorResolve (*generator*, *value*, *done*)

1. Assert: *generator* is an AsyncGenerator instance.
2. Let *queue* be *generator*.[[AsyncGeneratorQueue]].
3. Assert: *queue* is not an empty List.
4. Remove the first element from *queue* and let *next* be the value of that element.
5. Let *promiseCapability* be *next*.[[Capability]].
6. Let *iteratorResult* be ! CreateIterResultObject(*value*, *done*).
7. Perform ! Call(*promiseCapability*.[[Resolve]], **undefined**, « *iteratorResult* »).
8. Perform ! AsyncGeneratorResumeNext(*generator*).
9. Return **undefined**.

25.5.3.4 AsyncGeneratorReject (*generator*, *exception*)

1. Assert: *generator* is an AsyncGenerator instance.
2. Let *queue* be *generator*.[[AsyncGeneratorQueue]].
3. Assert: *queue* is not an empty List.
4. Remove the first element from *queue* and let *next* be the value of that element.
5. Let *promiseCapability* be *next*.[[Capability]].
6. Perform ! Call(*promiseCapability*.[[Reject]], **undefined**, « *exception* »).
7. Perform ! AsyncGeneratorResumeNext(*generator*).
8. Return **undefined**.

25.5.3.5 AsyncGeneratorResumeNext (*generator*)

1. Assert: *generator* is an AsyncGenerator instance.
2. Let *state* be *generator*.[[AsyncGeneratorState]].
3. Assert: *state* is not executing.
4. If *state* is awaiting-return, return **undefined**.
5. Let *queue* be *generator*.[[AsyncGeneratorQueue]].
6. If *queue* is an empty List, return **undefined**.
7. Let *next* be the value of the first element of *queue*.
8. Assert: *next* is an AsyncGeneratorRequest record.
9. Let *completion* be *next*.[[Completion]].
10. If *completion* is an abrupt completion, then

a. If *state* is suspendedStart, then
    i. Set *generator*.[[AsyncGeneratorState]] to completed.
    ii. Set *state* to completed.
b. If *state* is completed, then
    i. If *completion*.[[Type]] is return, then
        1. Set *generator*.[[AsyncGeneratorState]] to awaiting-return.
        2. Let *promise* be ? PromiseResolve(%Promise%, *completion*.[[Value]]).
        3. Let *stepsFulfilled* be the algorithm steps defined in AsyncGeneratorResumeNext Return Processor Fulfilled Functions.
        4. Let *onFulfilled* be ! CreateBuiltinFunction(*stepsFulfilled*, « [[Generator]] »).
        5. Set *onFulfilled*.[[Generator]] to *generator*.
        6. Let *stepsRejected* be the algorithm steps defined in AsyncGeneratorResumeNext Return Processor Rejected Functions.
        7. Let *onRejected* be ! CreateBuiltinFunction(*stepsRejected*, « [[Generator]] »).
        8. Set *onRejected*.[[Generator]] to *generator*.
        9. Perform ! PerformPromiseThen(*promise*, *onFulfilled*, *onRejected*).
        10. Return **undefined**.
    ii. Else,
        1. Assert: *completion*.[[Type]] is throw.
        2. Perform ! AsyncGeneratorReject(*generator*, *completion*.[[Value]]).
        3. Return **undefined**.

11. Else if *state* is completed, return ! AsyncGeneratorResolve(*generator*, **undefined**, **true**).
12. Assert: *state* is either suspendedStart or suspendedYield.
13. Let *genContext* be *generator*.[[AsyncGeneratorContext]].
14. Let *callerContext* be the running execution context.
15. Suspend *callerContext*.
16. Set *generator*.[[AsyncGeneratorState]] to executing.
17. Push *genContext* onto the execution context stack; *genContext* is now the running execution context.
18. Resume the suspended evaluation of *genContext* using *completion* as the result of the operation that suspended it. Let *result* be the completion record returned by the resumed computation.
19. Assert: *result* is never an abrupt completion.
20. Assert: When we return here, *genContext* has already been removed from the execution context stack and *callerContext* is the currently running execution context.
21. Return **undefined**.

25.5.3.5.1 AsyncGeneratorResumeNext Return Processor Fulfilled Functions

An AsyncGeneratorResumeNext return processor fulfilled function is an anonymous built-in function that is used as part of the AsyncGeneratorResumeNext specification device to unwrap promises passed in to the AsyncGenerator.prototype.return (*value*) method. Each AsyncGeneratorResumeNext return processor fulfilled function has a [[Generator]] internal slot.

When an AsyncGeneratorResumeNext return processor fulfilled function is called with argument *value*, the following steps are taken:

1. Let *F* be the active function object.
2. Set *F*.[[Generator]].[[AsyncGeneratorState]] to completed.
3. Return ! AsyncGeneratorResolve(*F*.[[Generator]], *value*, **true**).

The **"length"** property of an AsyncGeneratorResumeNext return processor fulfilled function is 1.

25.5.3.5.2 AsyncGeneratorResumeNext Return Processor Rejected Functions

An AsyncGeneratorResumeNext return processor rejected function is an anonymous built-in function that is used as part of the AsyncGeneratorResumeNext specification device to unwrap promises passed in to the AsyncGenerator.prototype.return (*value*) method. Each AsyncGeneratorResumeNext return processor rejected function has a [[Generator]] internal slot.

When an AsyncGeneratorResumeNext return processor rejected function is called with argument *reason*, the following steps are taken:

1. Let *F* be the active function object.
2. Set *F*.[[Generator]].[[AsyncGeneratorState]] to completed.
3. Return ! AsyncGeneratorReject(*F*.[[Generator]], *reason*).

The **"length"** property of an AsyncGeneratorResumeNext return processor rejected function is 1.

25.5.3.6 AsyncGeneratorEnqueue (*generator*, *completion*)

1. Assert: *completion* is a Completion Record.
2. Let *promiseCapability* be ! NewPromiseCapability(%Promise%).
3. If Type(*generator*) is not Object, or if *generator* does not have an [[AsyncGeneratorState]] internal slot, then
    a. Let *badGeneratorError* be a newly created **TypeError** object.
    b. Perform ! Call(*promiseCapability*.[[Reject]], **undefined**, « *badGeneratorError* »).
    c. Return *promiseCapability*.[[Promise]].
4. Let *queue* be *generator*.[[AsyncGeneratorQueue]].
5. Let *request* be AsyncGeneratorRequest { [[Completion]]: *completion*, [[Capability]]: *promiseCapability* }.
6. Append *request* to the end of *queue*.
7. Let *state* be *generator*.[[AsyncGeneratorState]].
8. If *state* is not executing, then
    a. Perform ! AsyncGeneratorResumeNext(*generator*).
9. Return *promiseCapability*.[[Promise]].

25.5.3.7 AsyncGeneratorYield (*value*)

The abstract operation AsyncGeneratorYield with argument *value* performs the following steps:

1. Let *genContext* be the running execution context.
2. Assert: *genContext* is the execution context of a generator.
3. Let *generator* be the value of the Generator component of *genContext*.
4. Assert: GetGeneratorKind() is async.
5. Set *value* to ? Await(*value*).
6. Set *generator*.[[AsyncGeneratorState]] to suspendedYield.
7. Remove *genContext* from the execution context stack and restore the execution context that is at the top of the execution context stack as the running execution context.
8. Set the code evaluation state of *genContext* such that when evaluation is resumed with a Completion *resumptionValue* the following steps will be performed:
    a. If *resumptionValue*.[[Type]] is not return, return Completion(*resumptionValue*).

b. Let *awaited* be Await(*resumptionValue*.[[Value]]).
c. If *awaited*.[[Type]] is throw, return Completion(*awaited*).
d. Assert: *awaited*.[[Type]] is normal.
e. Return Completion { [[Type]]: return, [[Value]]: *awaited*.[[Value]], [[Target]]: empty }.
f. NOTE: When one of the above steps returns, it returns to the evaluation of the *YieldExpression* production that originally called this abstract operation.

9. Return ! AsyncGeneratorResolve(*generator*, *value*, **false**).
10. NOTE: This returns to the evaluation of the operation that had most previously resumed evaluation of *genContext*.

25.6 Promise Objects

A Promise is an object that is used as a placeholder for the eventual results of a deferred (and possibly asynchronous) computation.

Any Promise object is in one of three mutually exclusive states: *fulfilled*, *rejected*, and *pending*:

- A promise **p** is fulfilled if **`p.then(f, r)`** will immediately enqueue a Job to call the function **f**.
- A promise **p** is rejected if **`p.then(f, r)`** will immediately enqueue a Job to call the function **r**.
- A promise is pending if it is neither fulfilled nor rejected.

A promise is said to be *settled* if it is not pending, i.e. if it is either fulfilled or rejected.

A promise is *resolved* if it is settled or if it has been "locked in" to match the state of another promise. Attempting to resolve or reject a resolved promise has no effect. A promise is *unresolved* if it is not resolved. An unresolved promise is always in the pending state. A resolved promise may be pending, fulfilled or rejected.

25.6.1 Promise Abstract Operations

25.6.1.1 PromiseCapability Records

A PromiseCapability is a Record value used to encapsulate a promise object along with the functions that are capable of resolving or rejecting that promise object. PromiseCapability Records are produced by the NewPromiseCapability abstract operation.

PromiseCapability Records have the fields listed in Table 76.

Table 76: PromiseCapability Record Fields

Field Name	Value	Meaning
[[Promise]]	An object	An object that is usable as a promise.
[[Resolve]]	A function object	The function that is used to resolve the given promise object.
[[Reject]]	A function object	The function that is used to reject the given promise object.

25.6.1.1.1 IfAbruptRejectPromise (*value*, *capability*)

IfAbruptRejectPromise is a shorthand for a sequence of algorithm steps that use a PromiseCapability Record. An

algorithm step of the form:

1. IfAbruptRejectPromise(*value*, *capability*).

means the same thing as:

1. If *value* is an abrupt completion, then
    a. Perform ? Call(*capability*.[[Reject]], **undefined**, « *value*.[[Value]] »).
    b. Return *capability*.[[Promise]].
2. Else if *value* is a Completion Record, set *value* to *value*.[[Value]].

25.6.1.2 PromiseReaction Records

The PromiseReaction is a Record value used to store information about how a promise should react when it becomes resolved or rejected with a given value. PromiseReaction records are created by the PerformPromiseThen abstract operation, and are used by the abstract closure returned by NewPromiseReactionJob.

PromiseReaction records have the fields listed in Table 77.

Table 77: PromiseReaction Record Fields

Field Name	Value	Meaning
[[Capability]]	A PromiseCapability Record, or **undefined**	The capabilities of the promise for which this record provides a reaction handler.
[[Type]]	Fulfill | Reject	The [[Type]] is used when [[Handler]] is **undefined** to allow for behaviour specific to the settlement type.
[[Handler]]	A function object or **undefined**.	The function that should be applied to the incoming value, and whose return value will govern what happens to the derived promise. If [[Handler]] is **undefined**, a function that depends on the value of [[Type]] will be used instead.

25.6.1.3 CreateResolvingFunctions (*promise*)

When CreateResolvingFunctions is performed with argument *promise*, the following steps are taken:

1. Let *alreadyResolved* be the Record { [[Value]]: **false** }.
2. Let *stepsResolve* be the algorithm steps defined in Promise Resolve Functions.
3. Let *resolve* be ! CreateBuiltinFunction(*stepsResolve*, « [[Promise]], [[AlreadyResolved]] »).
4. Set *resolve*.[[Promise]] to *promise*.
5. Set *resolve*.[[AlreadyResolved]] to *alreadyResolved*.
6. Let *stepsReject* be the algorithm steps defined in Promise Reject Functions.
7. Let *reject* be ! CreateBuiltinFunction(*stepsReject*, « [[Promise]], [[AlreadyResolved]] »).
8. Set *reject*.[[Promise]] to *promise*.
9. Set *reject*.[[AlreadyResolved]] to *alreadyResolved*.
10. Return the Record { [[Resolve]]: *resolve*, [[Reject]]: *reject* }.

25.6.1.3.1 Promise Reject Functions

A promise reject function is an anonymous built-in function that has [[Promise]] and [[AlreadyResolved]] internal slots.

When a promise reject function is called with argument *reason*, the following steps are taken:

1. Let *F* be the active function object.
2. Assert: *F* has a [[Promise]] internal slot whose value is an Object.
3. Let *promise* be *F*.[[Promise]].
4. Let *alreadyResolved* be *F*.[[AlreadyResolved]].
5. If *alreadyResolved*.[[Value]] is **true**, return **undefined**.
6. Set *alreadyResolved*.[[Value]] to **true**.
7. Return RejectPromise(*promise*, *reason*).

The **"length"** property of a promise reject function is 1.

25.6.1.3.2 Promise Resolve Functions

A promise resolve function is an anonymous built-in function that has [[Promise]] and [[AlreadyResolved]] internal slots.

When a promise resolve function is called with argument *resolution*, the following steps are taken:

1. Let *F* be the active function object.
2. Assert: *F* has a [[Promise]] internal slot whose value is an Object.
3. Let *promise* be *F*.[[Promise]].
4. Let *alreadyResolved* be *F*.[[AlreadyResolved]].
5. If *alreadyResolved*.[[Value]] is **true**, return **undefined**.
6. Set *alreadyResolved*.[[Value]] to **true**.
7. If SameValue(*resolution*, *promise*) is **true**, then
    a. Let *selfResolutionError* be a newly created **TypeError** object.
    b. Return RejectPromise(*promise*, *selfResolutionError*).
8. If Type(*resolution*) is not Object, then
    a. Return FulfillPromise(*promise*, *resolution*).
9. Let *then* be Get(*resolution*, **"then"**).
10. If *then* is an abrupt completion, then
    a. Return RejectPromise(*promise*, *then*.[[Value]]).
11. Let *thenAction* be *then*.[[Value]].
12. If IsCallable(*thenAction*) is **false**, then
    a. Return FulfillPromise(*promise*, *resolution*).
13. Let *job* be NewPromiseResolveThenableJob(*promise*, *resolution*, *thenAction*).
14. Perform HostEnqueuePromiseJob(*job*.[[Job]], *job*.[[Realm]]).
15. Return **undefined**.

The **"length"** property of a promise resolve function is 1.

25.6.1.4 FulfillPromise (*promise*, *value*)

When the FulfillPromise abstract operation is called with arguments *promise* and *value*, the following steps are taken:

1. Assert: The value of *promise*.[[PromiseState]] is pending.
2. Let *reactions* be *promise*.[[PromiseFulfillReactions]].
3. Set *promise*.[[PromiseResult]] to *value*.
4. Set *promise*.[[PromiseFulfillReactions]] to **undefined**.
5. Set *promise*.[[PromiseRejectReactions]] to **undefined**.
6. Set *promise*.[[PromiseState]] to fulfilled.
7. Return TriggerPromiseReactions(*reactions*, *value*).

25.6.1.5 NewPromiseCapability (*C*)

The abstract operation NewPromiseCapability takes a constructor function, and attempts to use that constructor function in the fashion of the built-in `Promise` constructor to create a Promise object and extract its resolve and reject functions. The promise plus the resolve and reject functions are used to initialize a new PromiseCapability Record which is returned as the value of this abstract operation.

1. If IsConstructor(*C*) is **false**, throw a **TypeError** exception.
2. NOTE: *C* is assumed to be a constructor function that supports the parameter conventions of the `Promise` constructor (see 25.6.3.1).
3. Let *promiseCapability* be the PromiseCapability { [[Promise]]: **undefined**, [[Resolve]]: **undefined**, [[Reject]]: **undefined** }.
4. Let *steps* be the algorithm steps defined in GetCapabilitiesExecutor Functions.
5. Let *executor* be ! CreateBuiltinFunction(*steps*, « [[Capability]] »).
6. Set *executor*.[[Capability]] to *promiseCapability*.
7. Let *promise* be ? Construct(*C*, « *executor* »).
8. If IsCallable(*promiseCapability*.[[Resolve]]) is **false**, throw a **TypeError** exception.
9. If IsCallable(*promiseCapability*.[[Reject]]) is **false**, throw a **TypeError** exception.
10. Set *promiseCapability*.[[Promise]] to *promise*.
11. Return *promiseCapability*.

NOTE This abstract operation supports Promise subclassing, as it is generic on any constructor that calls a passed executor function argument in the same way as the Promise constructor. It is used to generalize static methods of the Promise constructor to any subclass.

25.6.1.5.1 GetCapabilitiesExecutor Functions

A GetCapabilitiesExecutor function is an anonymous built-in function that has a [[Capability]] internal slot.

When a GetCapabilitiesExecutor function is called with arguments *resolve* and *reject*, the following steps are taken:

1. Let *F* be the active function object.
2. Assert: *F* has a [[Capability]] internal slot whose value is a PromiseCapability Record.
3. Let *promiseCapability* be *F*.[[Capability]].
4. If *promiseCapability*.[[Resolve]] is not **undefined**, throw a **TypeError** exception.
5. If *promiseCapability*.[[Reject]] is not **undefined**, throw a **TypeError** exception.
6. Set *promiseCapability*.[[Resolve]] to *resolve*.
7. Set *promiseCapability*.[[Reject]] to *reject*.
8. Return **undefined**.

The **"length"** property of a GetCapabilitiesExecutor function is 2.

25.6.1.6 IsPromise (*x*)

The abstract operation IsPromise checks for the promise brand on an object.

1. If Type(*x*) is not Object, return **false**.
2. If *x* does not have a [[PromiseState]] internal slot, return **false**.
3. Return **true**.

25.6.1.7 RejectPromise (*promise*, *reason*)

When the RejectPromise abstract operation is called with arguments *promise* and *reason*, the following steps are taken:

1. Assert: The value of *promise*.[[PromiseState]] is pending.
2. Let *reactions* be *promise*.[[PromiseRejectReactions]].
3. Set *promise*.[[PromiseResult]] to *reason*.
4. Set *promise*.[[PromiseFulfillReactions]] to **undefined**.
5. Set *promise*.[[PromiseRejectReactions]] to **undefined**.
6. Set *promise*.[[PromiseState]] to rejected.
7. If *promise*.[[PromiseIsHandled]] is **false**, perform HostPromiseRejectionTracker(*promise*, **"reject"**).
8. Return TriggerPromiseReactions(*reactions*, *reason*).

25.6.1.8 TriggerPromiseReactions (*reactions*, *argument*)

The abstract operation TriggerPromiseReactions takes a collection of PromiseReactionRecords and enqueues a new Job for each record. Each such Job processes the [[Type]] and [[Handler]] of the PromiseReactionRecord, and if the [[Handler]] is a function, calls it passing the given argument. If the [[Handler]] is **undefined**, the behaviour is determined by the [[Type]].

1. For each *reaction* in *reactions*, in original insertion order, do
    a. Let *job* be NewPromiseReactionJob(*reaction*, *argument*).
    b. Perform HostEnqueuePromiseJob(*job*.[[Job]], *job*.[[Realm]]).
2. Return **undefined**.

25.6.1.9 HostPromiseRejectionTracker (*promise*, *operation*)

HostPromiseRejectionTracker is an implementation-defined abstract operation that allows host environments to track promise rejections.

An implementation of HostPromiseRejectionTracker must complete normally in all cases. The default implementation of HostPromiseRejectionTracker is to unconditionally return an empty normal completion.

NOTE 1 HostPromiseRejectionTracker is called in two scenarios:

- When a promise is rejected without any handlers, it is called with its *operation* argument set to **"reject"**.
- When a handler is added to a rejected promise for the first time, it is called with its *operation* argument set to **"handle"**.

A typical implementation of HostPromiseRejectionTracker might try to notify developers of unhandled rejections, while also being careful to notify them if such previous notifications are later invalidated by new handlers being attached.

NOTE 2 If *operation* is **"handle"**, an implementation should not hold a reference to *promise* in a way that would interfere with garbage collection. An implementation may hold a reference to *promise* if *operation* is **"reject"**, since it is expected that rejections will be rare and not on hot code paths.

25.6.2 Promise Jobs

25.6.2.1 NewPromiseReactionJob (*reaction*, *argument*)

The abstract operation NewPromiseReactionJob takes two arguments, *reaction* and *argument* and returns a new Job abstract closure that applies the appropriate handler to the incoming value, and uses the handler's return value to resolve or reject the derived promise associated with that handler. It performs the following steps:

1. Let *job* be a new Job abstract closure with no parameters that captures *reaction* and *argument* and performs the following steps when called:
    a. Assert: *reaction* is a PromiseReaction Record.
    b. Let *promiseCapability* be *reaction*.[[Capability]].
    c. Let *type* be *reaction*.[[Type]].
    d. Let *handler* be *reaction*.[[Handler]].
    e. If *handler* is **undefined**, then
        i. If *type* is Fulfill, let *handlerResult* be NormalCompletion(*argument*).
        ii. Else,
            1. Assert: *type* is Reject.
            2. Let *handlerResult* be ThrowCompletion(*argument*).
    f. Else, let *handlerResult* be Call(*handler*, **undefined**, « *argument* »).
    g. If *promiseCapability* is **undefined**, then
        i. Assert: *handlerResult* is not an abrupt completion.
        ii. Return NormalCompletion(empty).
    h. If *handlerResult* is an abrupt completion, then
        i. Let *status* be Call(*promiseCapability*.[[Reject]], **undefined**, « *handlerResult*.[[Value]] »).
    i. Else,
        i. Let *status* be Call(*promiseCapability*.[[Resolve]], **undefined**, « *handlerResult*.[[Value]] »).
    j. Return Completion(*status*).
2. Let *handlerRealm* be **null**.
3. If *reaction*.[[Handler]] is not **undefined**, then
    a. Let *getHandlerRealmResult* be GetFunctionRealm(*reaction*.[[Handler]]).

b. If *getHandlerRealmResult* is a normal completion, then set *handlerRealm* to *getHandlerRealmResult*.[[Value]].

4. Return the Record { [[Job]]: *job*, [[Realm]]: *handlerRealm* }.

25.6.2.2 NewPromiseResolveThenableJob (*promiseToResolve*, *thenable*, *then*)

The abstract operation NewPromiseResolveThenableJob takes three arguments, *promiseToResolve*, *thenable*, and *then*, and performs the following steps:

1. Let *job* be a new Job abstract closure with no parameters that captures *promiseToResolve*, *thenable*, and *then* and performs the following steps when called:
   a. Let *resolvingFunctions* be CreateResolvingFunctions(*promiseToResolve*).
   b. Let *thenCallResult* be Call(*then*, *thenable*, « *resolvingFunctions*.[[Resolve]], *resolvingFunctions*.[[Reject]] »).
   c. If *thenCallResult* is an abrupt completion, then
      i. Let *status* be Call(*resolvingFunctions*.[[Reject]], **undefined**, « *thenCallResult*.[[Value]] »).
      ii. Return Completion(*status*).
   d. Return Completion(*thenCallResult*).
2. Let *getThenRealmResult* be GetFunctionRealm(*then*).
3. If *getThenRealmResult* is a normal completion, then let *thenRealm* be *getThenRealmResult*.[[Value]].
4. Otherwise, let *thenRealm* be **null**.
5. Return the Record { [[Job]]: *job*, [[Realm]]: *thenRealm* }.

NOTE This Job uses the supplied thenable and its `then` method to resolve the given promise. This process must take place as a Job to ensure that the evaluation of the `then` method occurs after evaluation of any surrounding code has completed.

25.6.3 The Promise Constructor

The Promise constructor:

- is the intrinsic object *%Promise%*.
- is the initial value of the **"Promise"** property of the global object.
- creates and initializes a new Promise object when called as a constructor.
- is not intended to be called as a function and will throw an exception when called in that manner.
- is designed to be subclassable. It may be used as the value in an `extends` clause of a class definition. Subclass constructors that intend to inherit the specified `Promise` behaviour must include a `super` call to the `Promise` constructor to create and initialize the subclass instance with the internal state necessary to support the `Promise` and `Promise.prototype` built-in methods.

25.6.3.1 Promise (*executor*)

When the `Promise` function is called with argument *executor*, the following steps are taken:

1. If NewTarget is **undefined**, throw a **TypeError** exception.
2. If IsCallable(*executor*) is **false**, throw a **TypeError** exception.
3. Let *promise* be ? OrdinaryCreateFromConstructor(NewTarget, **"%Promise.prototype%"**, « [[PromiseState]], [[PromiseResult]], [[PromiseFulfillReactions]], [[PromiseRejectReactions]], [[PromiseIsHandled]] »).
4. Set *promise*.[[PromiseState]] to pending.

5. Set *promise*.[[PromiseFulfillReactions]] to a new empty List.
6. Set *promise*.[[PromiseRejectReactions]] to a new empty List.
7. Set *promise*.[[PromiseIsHandled]] to **false**.
8. Let *resolvingFunctions* be CreateResolvingFunctions(*promise*).
9. Let *completion* be Call(*executor*, **undefined**, « *resolvingFunctions*.[[Resolve]], *resolvingFunctions*.[[Reject]] »).
10. If *completion* is an abrupt completion, then
    a. Perform ? Call(*resolvingFunctions*.[[Reject]], **undefined**, « *completion*.[[Value]] »).
11. Return *promise*.

NOTE The *executor* argument must be a function object. It is called for initiating and reporting completion of the possibly deferred action represented by this Promise object. The executor is called with two arguments: *resolve* and *reject*. These are functions that may be used by the *executor* function to report eventual completion or failure of the deferred computation. Returning from the executor function does not mean that the deferred action has been completed but only that the request to eventually perform the deferred action has been accepted.

The *resolve* function that is passed to an *executor* function accepts a single argument. The *executor* code may eventually call the *resolve* function to indicate that it wishes to resolve the associated Promise object. The argument passed to the *resolve* function represents the eventual value of the deferred action and can be either the actual fulfillment value or another Promise object which will provide the value if it is fulfilled.

The *reject* function that is passed to an *executor* function accepts a single argument. The *executor* code may eventually call the *reject* function to indicate that the associated Promise is rejected and will never be fulfilled. The argument passed to the *reject* function is used as the rejection value of the promise. Typically it will be an `Error` object.

The resolve and reject functions passed to an *executor* function by the Promise constructor have the capability to actually resolve and reject the associated promise. Subclasses may have different constructor behaviour that passes in customized values for resolve and reject.

25.6.4 Properties of the Promise Constructor

The Promise constructor:

- has a [[Prototype]] internal slot whose value is %Function.prototype%.
- has the following properties:

25.6.4.1 Promise.all (*iterable*)

The `all` function returns a new promise which is fulfilled with an array of fulfillment values for the passed promises, or rejects with the reason of the first passed promise that rejects. It resolves all elements of the passed iterable to promises as it runs this algorithm.

1. Let *C* be the **this** value.
2. Let *promiseCapability* be ? NewPromiseCapability(*C*).
3. Let *iteratorRecord* be GetIterator(*iterable*).
4. IfAbruptRejectPromise(*iteratorRecord*, *promiseCapability*).

5. Let *result* be PerformPromiseAll(*iteratorRecord*, *C*, *promiseCapability*).
6. If *result* is an abrupt completion, then
    a. If *iteratorRecord*.[[Done]] is **false**, set *result* to IteratorClose(*iteratorRecord*, *result*).
    b. IfAbruptRejectPromise(*result*, *promiseCapability*).
7. Return Completion(*result*).

This function is the *%Promise_all%* intrinsic object.

> NOTE The `all` function requires its **this** value to be a constructor function that supports the parameter conventions of the `Promise` constructor.

25.6.4.1.1 Runtime Semantics: PerformPromiseAll (*iteratorRecord*, *constructor*, *resultCapability*)

When the PerformPromiseAll abstract operation is called with arguments *iteratorRecord*, *constructor*, and *resultCapability*, the following steps are taken:

1. Assert: IsConstructor(*constructor*) is **true**.
2. Assert: *resultCapability* is a PromiseCapability Record.
3. Let *values* be a new empty List.
4. Let *remainingElementsCount* be the Record { [[Value]]: 1 }.
5. Let *promiseResolve* be ? Get(*constructor*, **"resolve"**).
6. If ! IsCallable(*promiseResolve*) is **false**, throw a **TypeError** exception.
7. Let *index* be 0.
8. Repeat,
    a. Let *next* be IteratorStep(*iteratorRecord*).
    b. If *next* is an abrupt completion, set *iteratorRecord*.[[Done]] to **true**.
    c. ReturnIfAbrupt(*next*).
    d. If *next* is **false**, then
        i. Set *iteratorRecord*.[[Done]] to **true**.
        ii. Set *remainingElementsCount*.[[Value]] to *remainingElementsCount*.[[Value]] - 1.
        iii. If *remainingElementsCount*.[[Value]] is 0, then
            1. Let *valuesArray* be ! CreateArrayFromList(*values*).
            2. Perform ? Call(*resultCapability*.[[Resolve]], **undefined**, « *valuesArray* »).
        iv. Return *resultCapability*.[[Promise]].
    e. Let *nextValue* be IteratorValue(*next*).
    f. If *nextValue* is an abrupt completion, set *iteratorRecord*.[[Done]] to **true**.
    g. ReturnIfAbrupt(*nextValue*).
    h. Append **undefined** to *values*.
    i. Let *nextPromise* be ? Call(*promiseResolve*, *constructor*, « *nextValue* »).
    j. Let *steps* be the algorithm steps defined in `Promise.all` Resolve Element Functions.
    k. Let *resolveElement* be ! CreateBuiltinFunction(*steps*, « [[AlreadyCalled]], [[Index]], [[Values]], [[Capability]], [[RemainingElements]] »).
    l. Set *resolveElement*.[[AlreadyCalled]] to the Record { [[Value]]: **false** }.
    m. Set *resolveElement*.[[Index]] to *index*.
    n. Set *resolveElement*.[[Values]] to *values*.
    o. Set *resolveElement*.[[Capability]] to *resultCapability*.
    p. Set *resolveElement*.[[RemainingElements]] to *remainingElementsCount*.
    q. Set *remainingElementsCount*.[[Value]] to *remainingElementsCount*.[[Value]] + 1.

r. Perform ? Invoke(*nextPromise*, **"then"**, « *resolveElement*, *resultCapability*.[[Reject]] »).
s. Set *index* to *index* + 1.

25.6.4.1.2 `Promise.all` Resolve Element Functions

A `Promise.all` resolve element function is an anonymous built-in function that is used to resolve a specific `Promise.all` element. Each `Promise.all` resolve element function has [[Index]], [[Values]], [[Capability]], [[RemainingElements]], and [[AlreadyCalled]] internal slots.

When a `Promise.all` resolve element function is called with argument *x*, the following steps are taken:

1. Let *F* be the active function object.
2. Let *alreadyCalled* be *F*.[[AlreadyCalled]].
3. If *alreadyCalled*.[[Value]] is **true**, return **undefined**.
4. Set *alreadyCalled*.[[Value]] to **true**.
5. Let *index* be *F*.[[Index]].
6. Let *values* be *F*.[[Values]].
7. Let *promiseCapability* be *F*.[[Capability]].
8. Let *remainingElementsCount* be *F*.[[RemainingElements]].
9. Set *values*[*index*] to *x*.
10. Set *remainingElementsCount*.[[Value]] to *remainingElementsCount*.[[Value]] - 1.
11. If *remainingElementsCount*.[[Value]] is 0, then
    a. Let *valuesArray* be ! CreateArrayFromList(*values*).
    b. Return ? Call(*promiseCapability*.[[Resolve]], **undefined**, « *valuesArray* »).
12. Return **undefined**.

The **"length"** property of a `Promise.all` resolve element function is 1.

25.6.4.2 Promise.allSettled (*iterable*)

The `allSettled` function returns a promise that is fulfilled with an array of promise state snapshots, but only after all the original promises have settled, i.e. become either fulfilled or rejected. It resolves all elements of the passed iterable to promises as it runs this algorithm.

1. Let *C* be the **this** value.
2. Let *promiseCapability* be ? NewPromiseCapability(*C*).
3. Let *iteratorRecord* be GetIterator(*iterable*).
4. IfAbruptRejectPromise(*iteratorRecord*, *promiseCapability*).
5. Let *result* be PerformPromiseAllSettled(*iteratorRecord*, *C*, *promiseCapability*).
6. If *result* is an abrupt completion, then
    a. If *iteratorRecord*.[[Done]] is **false**, set *result* to IteratorClose(*iteratorRecord*, *result*).
    b. IfAbruptRejectPromise(*result*, *promiseCapability*).
7. Return Completion(*result*).

> NOTE The `allSettled` function requires its **this** value to be a constructor function that supports the parameter conventions of the `Promise` constructor.

25.6.4.2.1 Runtime Semantics: PerformPromiseAllSettled (*iteratorRecord*, *constructor*, *resultCapability*)

When the PerformPromiseAllSettled abstract operation is called with arguments *iteratorRecord*, *constructor*, and *resultCapability*, the following steps are taken:

1. Assert: ! IsConstructor(*constructor*) is **true**.
2. Assert: *resultCapability* is a PromiseCapability Record.
3. Let *values* be a new empty List.
4. Let *remainingElementsCount* be the Record { [[Value]]: 1 }.
5. Let *index* be 0.
6. Let *promiseResolve* be ? Get(*constructor*, **"resolve"**).
7. If IsCallable(*promiseResolve*) is **false**, throw a **TypeError** exception.
8. Repeat,
    a. Let *next* be IteratorStep(*iteratorRecord*).
    b. If *next* is an abrupt completion, set *iteratorRecord*.[[Done]] to **true**.
    c. ReturnIfAbrupt(*next*).
    d. If *next* is **false**, then
        i. Set *iteratorRecord*.[[Done]] to **true**.
        ii. Set *remainingElementsCount*.[[Value]] to *remainingElementsCount*.[[Value]] - 1.
        iii. If *remainingElementsCount*.[[Value]] is 0, then
            1. Let *valuesArray* be ! CreateArrayFromList(*values*).
            2. Perform ? Call(*resultCapability*.[[Resolve]], **undefined**, « *valuesArray* »).
        iv. Return *resultCapability*.[[Promise]].
    e. Let *nextValue* be IteratorValue(*next*).
    f. If *nextValue* is an abrupt completion, set *iteratorRecord*.[[Done]] to **true**.
    g. ReturnIfAbrupt(*nextValue*).
    h. Append **undefined** to *values*.
    i. Let *nextPromise* be ? Call(*promiseResolve*, *constructor*, « *nextValue* »).
    j. Let *steps* be the algorithm steps defined in **`Promise.allSettled`** Resolve Element Functions.
    k. Let *resolveElement* be ! CreateBuiltinFunction(*steps*, « [[AlreadyCalled]], [[Index]], [[Values]], [[Capability]], [[RemainingElements]] »).
    l. Let *alreadyCalled* be the Record { [[Value]]: **false** }.
    m. Set *resolveElement*.[[AlreadyCalled]] to *alreadyCalled*.
    n. Set *resolveElement*.[[Index]] to *index*.
    o. Set *resolveElement*.[[Values]] to *values*.
    p. Set *resolveElement*.[[Capability]] to *resultCapability*.
    q. Set *resolveElement*.[[RemainingElements]] to *remainingElementsCount*.
    r. Let *rejectSteps* be the algorithm steps defined in **`Promise.allSettled`** Reject Element Functions.
    s. Let *rejectElement* be ! CreateBuiltinFunction(*rejectSteps*, « [[AlreadyCalled]], [[Index]], [[Values]], [[Capability]], [[RemainingElements]] »).
    t. Set *rejectElement*.[[AlreadyCalled]] to *alreadyCalled*.
    u. Set *rejectElement*.[[Index]] to *index*.
    v. Set *rejectElement*.[[Values]] to *values*.
    w. Set *rejectElement*.[[Capability]] to *resultCapability*.
    x. Set *rejectElement*.[[RemainingElements]] to *remainingElementsCount*.
    y. Set *remainingElementsCount*.[[Value]] to *remainingElementsCount*.[[Value]] + 1.
    z. Perform ? Invoke(*nextPromise*, **"then"**, « *resolveElement*, *rejectElement* »).
    aa. Set *index* to *index* + 1.

25.6.4.2.2 `Promise.allSettled` Resolve Element Functions

A **`Promise.allSettled`** resolve element function is an anonymous built-in function that is used to resolve a specific **`Promise.allSettled`** element. Each **`Promise.allSettled`** resolve element function has [[Index]], [[Values]], [[Capability]], [[RemainingElements]], and [[AlreadyCalled]] internal slots.

When a **`Promise.allSettled`** resolve element function is called with argument *x*, the following steps are taken:

1. Let *F* be the active function object.
2. Let *alreadyCalled* be *F*.[[AlreadyCalled]].
3. If *alreadyCalled*.[[Value]] is **true**, return **undefined**.
4. Set *alreadyCalled*.[[Value]] to **true**.
5. Let *index* be *F*.[[Index]].
6. Let *values* be *F*.[[Values]].
7. Let *promiseCapability* be *F*.[[Capability]].
8. Let *remainingElementsCount* be *F*.[[RemainingElements]].
9. Let *obj* be ! OrdinaryObjectCreate(%Object.prototype%).
10. Perform ! CreateDataPropertyOrThrow(*obj*, **"status"**, **"fulfilled"**).
11. Perform ! CreateDataPropertyOrThrow(*obj*, **"value"**, *x*).
12. Set *values*[*index*] to *obj*.
13. Set *remainingElementsCount*.[[Value]] to *remainingElementsCount*.[[Value]] - 1.
14. If *remainingElementsCount*.[[Value]] is 0, then
    a. Let *valuesArray* be ! CreateArrayFromList(*values*).
    b. Return ? Call(*promiseCapability*.[[Resolve]], **undefined**, « *valuesArray* »).
15. Return **undefined**.

The **"length"** property of a **`Promise.allSettled`** resolve element function is 1.

25.6.4.2.3 `Promise.allSettled` Reject Element Functions

A **`Promise.allSettled`** reject element function is an anonymous built-in function that is used to reject a specific **`Promise.allSettled`** element. Each **`Promise.allSettled`** reject element function has [[Index]], [[Values]], [[Capability]], [[RemainingElements]], and [[AlreadyCalled]] internal slots.

When a **`Promise.allSettled`** reject element function is called with argument *x*, the following steps are taken:

1. Let *F* be the active function object.
2. Let *alreadyCalled* be *F*.[[AlreadyCalled]].
3. If *alreadyCalled*.[[Value]] is **true**, return **undefined**.
4. Set *alreadyCalled*.[[Value]] to **true**.
5. Let *index* be *F*.[[Index]].
6. Let *values* be *F*.[[Values]].
7. Let *promiseCapability* be *F*.[[Capability]].
8. Let *remainingElementsCount* be *F*.[[RemainingElements]].
9. Let *obj* be ! OrdinaryObjectCreate(%Object.prototype%).
10. Perform ! CreateDataPropertyOrThrow(*obj*, **"status"**, **"rejected"**).
11. Perform ! CreateDataPropertyOrThrow(*obj*, **"reason"**, *x*).
12. Set *values*[*index*] to *obj*.
13. Set *remainingElementsCount*.[[Value]] to *remainingElementsCount*.[[Value]] - 1.
14. If *remainingElementsCount*.[[Value]] is 0, then
    a. Let *valuesArray* be ! CreateArrayFromList(*values*).

b. Return ? Call(*promiseCapability*.[[Resolve]], **undefined**, « *valuesArray* »).

15. Return **undefined**.

The **"length"** property of a **`Promise.allSettled`** reject element function is 1.

25.6.4.3 Promise.prototype

The initial value of **`Promise.prototype`** is %Promise.prototype%.

This property has the attributes { [[Writable]]: **false**, [[Enumerable]]: **false**, [[Configurable]]: **false** }.

25.6.4.4 Promise.race (*iterable*)

The **`race`** function returns a new promise which is settled in the same way as the first passed promise to settle. It resolves all elements of the passed *iterable* to promises as it runs this algorithm.

1. Let *C* be the **this** value.
2. Let *promiseCapability* be ? NewPromiseCapability(*C*).
3. Let *iteratorRecord* be GetIterator(*iterable*).
4. IfAbruptRejectPromise(*iteratorRecord*, *promiseCapability*).
5. Let *result* be PerformPromiseRace(*iteratorRecord*, *C*, *promiseCapability*).
6. If *result* is an abrupt completion, then
   a. If *iteratorRecord*.[[Done]] is **false**, set *result* to IteratorClose(*iteratorRecord*, *result*).
   b. IfAbruptRejectPromise(*result*, *promiseCapability*).
7. Return Completion(*result*).

NOTE 1 If the *iterable* argument is empty or if none of the promises in *iterable* ever settle then the pending promise returned by this method will never be settled.

NOTE 2 The **`race`** function expects its **this** value to be a constructor function that supports the parameter conventions of the **`Promise`** constructor. It also expects that its **this** value provides a **`resolve`** method.

25.6.4.4.1 Runtime Semantics: PerformPromiseRace (*iteratorRecord*, *constructor*, *resultCapability*)

When the PerformPromiseRace abstract operation is called with arguments *iteratorRecord*, *constructor*, and *resultCapability*, the following steps are taken:

1. Assert: IsConstructor(*constructor*) is **true**.
2. Assert: *resultCapability* is a PromiseCapability Record.
3. Let *promiseResolve* be ? Get(*constructor*, **"resolve"**).
4. If ! IsCallable(*promiseResolve*) is **false**, throw a **TypeError** exception.
5. Repeat,
   a. Let *next* be IteratorStep(*iteratorRecord*).
   b. If *next* is an abrupt completion, set *iteratorRecord*.[[Done]] to **true**.
   c. ReturnIfAbrupt(*next*).
   d. If *next* is **false**, then
      i. Set *iteratorRecord*.[[Done]] to **true**.

ii. Return *resultCapability*.[[Promise]].

e. Let *nextValue* be IteratorValue(*next*).

f. If *nextValue* is an abrupt completion, set *iteratorRecord*.[[Done]] to **true**.

g. ReturnIfAbrupt(*nextValue*).

h. Let *nextPromise* be ? Call(*promiseResolve*, *constructor*, « *nextValue* »).

i. Perform ? Invoke(*nextPromise*, **"then"**, « *resultCapability*.[[Resolve]], *resultCapability*.[[Reject]] »).

25.6.4.5 Promise.reject (*r*)

The **`reject`** function returns a new promise rejected with the passed argument.

1. Let *C* be the **this** value.
2. Let *promiseCapability* be ? NewPromiseCapability(*C*).
3. Perform ? Call(*promiseCapability*.[[Reject]], **undefined**, « *r* »).
4. Return *promiseCapability*.[[Promise]].

This function is the *%Promise_reject%* intrinsic object.

> NOTE The **`reject`** function expects its **this** value to be a constructor function that supports the parameter conventions of the **`Promise`** constructor.

25.6.4.6 Promise.resolve (*x*)

The **`resolve`** function returns either a new promise resolved with the passed argument, or the argument itself if the argument is a promise produced by this constructor.

1. Let *C* be the **this** value.
2. If Type(*C*) is not Object, throw a **TypeError** exception.
3. Return ? PromiseResolve(*C*, *x*).

This function is the *%Promise_resolve%* intrinsic object.

> NOTE The **`resolve`** function expects its **this** value to be a constructor function that supports the parameter conventions of the **`Promise`** constructor.

25.6.4.6.1 PromiseResolve (*C*, *x*)

The abstract operation PromiseResolve, given a constructor *C* and a value *x*, returns a new promise resolved with *x*.

1. Assert: Type(*C*) is Object.
2. If IsPromise(*x*) is **true**, then
   a. Let *xConstructor* be ? Get(*x*, **"constructor"**).
   b. If SameValue(*xConstructor*, *C*) is **true**, return *x*.
3. Let *promiseCapability* be ? NewPromiseCapability(*C*).
4. Perform ? Call(*promiseCapability*.[[Resolve]], **undefined**, « *x* »).
5. Return *promiseCapability*.[[Promise]].

25.6.4.7 get Promise [@@species]

`Promise[@@species]` is an accessor property whose set accessor function is **undefined**. Its get accessor function performs the following steps:

1. Return the **this** value.

The value of the **"name"** property of this function is **"get [Symbol.species]"**.

> NOTE Promise prototype methods normally use their **this** object's constructor to create a derived object. However, a subclass constructor may over-ride that default behaviour by redefining its @@species property.

25.6.5 Properties of the Promise Prototype Object

The Promise prototype object:

- is the intrinsic object *%PromisePrototype%*.
- has a [[Prototype]] internal slot whose value is %Object.prototype%.
- is an ordinary object.
- does not have a [[PromiseState]] internal slot or any of the other internal slots of Promise instances.

25.6.5.1 Promise.prototype.catch (*onRejected*)

When the **`catch`** method is called with argument *onRejected*, the following steps are taken:

1. Let *promise* be the **this** value.
2. Return ? Invoke(*promise*, **"then"**, « **undefined**, *onRejected* »).

25.6.5.2 Promise.prototype.constructor

The initial value of **`Promise.prototype.constructor`** is %Promise%.

25.6.5.3 Promise.prototype.finally (*onFinally*)

When the **`finally`** method is called with argument *onFinally*, the following steps are taken:

1. Let *promise* be the **this** value.
2. If Type(*promise*) is not Object, throw a **TypeError** exception.
3. Let *C* be ? SpeciesConstructor(*promise*, %Promise%).
4. Assert: IsConstructor(*C*) is **true**.
5. If IsCallable(*onFinally*) is **false**, then
    a. Let *thenFinally* be *onFinally*.
    b. Let *catchFinally* be *onFinally*.
6. Else,
    a. Let *stepsThenFinally* be the algorithm steps defined in Then Finally Functions.
    b. Let *thenFinally* be ! CreateBuiltinFunction(*stepsThenFinally*, « [[Constructor]], [[OnFinally]] »).
    c. Set *thenFinally*.[[Constructor]] to *C*.
    d. Set *thenFinally*.[[OnFinally]] to *onFinally*.
    e. Let *stepsCatchFinally* be the algorithm steps defined in Catch Finally Functions.
    f. Let *catchFinally* be ! CreateBuiltinFunction(*stepsCatchFinally*, « [[Constructor]], [[OnFinally]] »).

g. Set *catchFinally*.[[Constructor]] to *C*.
h. Set *catchFinally*.[[OnFinally]] to *onFinally*.

7. Return ? Invoke(*promise*, **"then"**, « *thenFinally*, *catchFinally* »).

25.6.5.3.1 Then Finally Functions

A Then Finally function is an anonymous built-in function that has a [[Constructor]] and an [[OnFinally]] internal slot. The value of the [[Constructor]] internal slot is a `Promise`-like constructor function object, and the value of the [[OnFinally]] internal slot is a function object.

When a Then Finally function is called with argument *value*, the following steps are taken:

1. Let *F* be the active function object.
2. Let *onFinally* be *F*.[[OnFinally]].
3. Assert: IsCallable(*onFinally*) is **true**.
4. Let *result* be ? Call(*onFinally*, **undefined**).
5. Let *C* be *F*.[[Constructor]].
6. Assert: IsConstructor(*C*) is **true**.
7. Let *promise* be ? PromiseResolve(*C*, *result*).
8. Let *valueThunk* be equivalent to a function that returns *value*.
9. Return ? Invoke(*promise*, **"then"**, « *valueThunk* »).

The **"length"** property of a Then Finally function is **1**.

25.6.5.3.2 Catch Finally Functions

A Catch Finally function is an anonymous built-in function that has a [[Constructor]] and an [[OnFinally]] internal slot. The value of the [[Constructor]] internal slot is a `Promise`-like constructor function object, and the value of the [[OnFinally]] internal slot is a function object.

When a Catch Finally function is called with argument *reason*, the following steps are taken:

1. Let *F* be the active function object.
2. Let *onFinally* be *F*.[[OnFinally]].
3. Assert: IsCallable(*onFinally*) is **true**.
4. Let *result* be ? Call(*onFinally*, **undefined**).
5. Let *C* be *F*.[[Constructor]].
6. Assert: IsConstructor(*C*) is **true**.
7. Let *promise* be ? PromiseResolve(*C*, *result*).
8. Let *thrower* be equivalent to a function that throws *reason*.
9. Return ? Invoke(*promise*, **"then"**, « *thrower* »).

The **"length"** property of a Catch Finally function is **1**.

25.6.5.4 Promise.prototype.then (*onFulfilled*, *onRejected*)

When the `then` method is called with arguments *onFulfilled* and *onRejected*, the following steps are taken:

1. Let *promise* be the **this** value.
2. If IsPromise(*promise*) is **false**, throw a **TypeError** exception.
3. Let *C* be ? SpeciesConstructor(*promise*, %Promise%).

4. Let *resultCapability* be ? NewPromiseCapability(*C*).
5. Return PerformPromiseThen(*promise*, *onFulfilled*, *onRejected*, *resultCapability*).

This function is the *%PromiseProto_then%* intrinsic object.

25.6.5.4.1 PerformPromiseThen (*promise*, *onFulfilled*, *onRejected* [, *resultCapability*])

The abstract operation PerformPromiseThen performs the "then" operation on *promise* using *onFulfilled* and *onRejected* as its settlement actions. If *resultCapability* is passed, the result is stored by updating *resultCapability*'s promise. (If it is not passed, then PerformPromiseThen is being called by a specification-internal operation where the result does not matter.)

1. Assert: IsPromise(*promise*) is **true**.
2. If *resultCapability* is present, then
    a. Assert: *resultCapability* is a PromiseCapability Record.
3. Else,
    a. Set *resultCapability* to **undefined**.
4. If IsCallable(*onFulfilled*) is **false**, then
    a. Set *onFulfilled* to **undefined**.
5. If IsCallable(*onRejected*) is **false**, then
    a. Set *onRejected* to **undefined**.
6. Let *fulfillReaction* be the PromiseReaction { [[Capability]]: *resultCapability*, [[Type]]: Fulfill, [[Handler]]: *onFulfilled* }.
7. Let *rejectReaction* be the PromiseReaction { [[Capability]]: *resultCapability*, [[Type]]: Reject, [[Handler]]: *onRejected* }.
8. If *promise*.[[PromiseState]] is pending, then
    a. Append *fulfillReaction* as the last element of the List that is *promise*.[[PromiseFulfillReactions]].
    b. Append *rejectReaction* as the last element of the List that is *promise*.[[PromiseRejectReactions]].
9. Else if *promise*.[[PromiseState]] is fulfilled, then
    a. Let *value* be *promise*.[[PromiseResult]].
    b. Let *fulfillJob* be NewPromiseReactionJob(*fulfillReaction*, *value*).
    c. Perform HostEnqueuePromiseJob(*fulfillJob*.[[Job]], *fulfillJob*.[[Realm]]).
10. Else,
    a. Assert: The value of *promise*.[[PromiseState]] is rejected.
    b. Let *reason* be *promise*.[[PromiseResult]].
    c. If *promise*.[[PromiseIsHandled]] is **false**, perform HostPromiseRejectionTracker(*promise*, **"handle"**).
    d. Let *rejectJob* be NewPromiseReactionJob(*rejectReaction*, *reason*).
    e. Perform HostEnqueuePromiseJob(*rejectJob*.[[Job]], *rejectJob*.[[Realm]]).
11. Set *promise*.[[PromiseIsHandled]] to **true**.
12. If *resultCapability* is **undefined**, then
    a. Return **undefined**.
13. Else,
    a. Return *resultCapability*.[[Promise]].

25.6.5.5 Promise.prototype [@@toStringTag]

The initial value of the @@toStringTag property is the String value **"Promise"**.

This property has the attributes { [[Writable]]: **false**, [[Enumerable]]: **false**, [[Configurable]]: **true** }.

25.6.6 Properties of Promise Instances

Promise instances are ordinary objects that inherit properties from the Promise prototype object (the intrinsic, %Promise.prototype%). Promise instances are initially created with the internal slots described in Table 78.

Table 78: Internal Slots of Promise Instances

Internal Slot	Description
[[PromiseState]]	One of pending, fulfilled, or rejected. Governs how a promise will react to incoming calls to its **`then`** method.
[[PromiseResult]]	The value with which the promise has been fulfilled or rejected, if any. Only meaningful if [[PromiseState]] is not pending.
[[PromiseFulfillReactions]]	A List of PromiseReaction records to be processed when/if the promise transitions from the pending state to the fulfilled state.
[[PromiseRejectReactions]]	A List of PromiseReaction records to be processed when/if the promise transitions from the pending state to the rejected state.
[[PromiseIsHandled]]	A boolean indicating whether the promise has ever had a fulfillment or rejection handler; used in unhandled rejection tracking.

25.7 AsyncFunction Objects

AsyncFunction objects are functions that are usually created by evaluating *AsyncFunctionDeclaration*s, *AsyncFunctionExpression*s, *AsyncMethod*s, and *AsyncArrowFunction*s. They may also be created by calling the %AsyncFunction% intrinsic.

25.7.1 The AsyncFunction Constructor

The AsyncFunction constructor:

- is the intrinsic object *%AsyncFunction%*.
- is a subclass of **`Function`**.
- creates and initializes a new AsyncFunction object when called as a function rather than as a constructor. Thus the function call **`AsyncFunction(…)`** is equivalent to the object creation expression **`new AsyncFunction(…)`** with the same arguments.
- is designed to be subclassable. It may be used as the value of an **`extends`** clause of a class definition. Subclass constructors that intend to inherit the specified AsyncFunction behaviour must include a **`super`** call to the **`AsyncFunction`** constructor to create and initialize a subclass instance with the internal slots necessary for built-in async function behaviour.

25.7.1.1 AsyncFunction (*p1*, *p2*, … , *pn*, *body*)

The last argument specifies the body (executable code) of an async function. Any preceding arguments specify formal parameters.

When the **`AsyncFunction`** function is called with some arguments *p1*, *p2*, … , *pn*, *body* (where *n* might be 0, that is,

there are no *p* arguments, and where *body* might also not be provided), the following steps are taken:

1. Let *C* be the active function object.
2. Let *args* be the *argumentsList* that was passed to this function by [[Call]] or [[Construct]].
3. Return CreateDynamicFunction(*C*, NewTarget, `async`, *args*).

> NOTE See NOTE for 19.2.1.1.

25.7.2 Properties of the AsyncFunction Constructor

The AsyncFunction constructor:

- is a standard built-in function object that inherits from the **`Function`** constructor.
- has a [[Prototype]] internal slot whose value is %Function%.
- has a **"name"** property whose value is **"AsyncFunction"**.
- has the following properties:

25.7.2.1 AsyncFunction.length

This is a data property with a value of 1. This property has the attributes { [[Writable]]: **false**, [[Enumerable]]: **false**, [[Configurable]]: **true** }.

25.7.2.2 AsyncFunction.prototype

The initial value of **`AsyncFunction.prototype`** is %AsyncFunction.prototype%.

This property has the attributes { [[Writable]]: **false**, [[Enumerable]]: **false**, [[Configurable]]: **false** }.

25.7.3 Properties of the AsyncFunction Prototype Object

The AsyncFunction prototype object:

- is an ordinary object.
- is not a function object and does not have an [[ECMAScriptCode]] internal slot or any other of the internal slots listed in Table 27.
- is the value of the **"prototype"** property of %AsyncFunction%.
- is the intrinsic object *%AsyncFunctionPrototype%*.
- has a [[Prototype]] internal slot whose value is %Function.prototype%.

25.7.3.1 AsyncFunction.prototype.constructor

The initial value of **`AsyncFunction.prototype.constructor`** is %AsyncFunction%

This property has the attributes { [[Writable]]: **false**, [[Enumerable]]: **false**, [[Configurable]]: **true** }.

25.7.3.2 AsyncFunction.prototype [@@toStringTag]

The initial value of the @@toStringTag property is the String value **"AsyncFunction"**.

This property has the attributes { [[Writable]]: **false**, [[Enumerable]]: **false**, [[Configurable]]: **true** }.

25.7.4 AsyncFunction Instances

Every AsyncFunction instance is an ECMAScript function object and has the internal slots listed in Table 27. The value of the [[IsClassConstructor]] internal slot for all such instances is **false**. AsyncFunction instances are not constructors and do not have a [[Construct]] internal method. AsyncFunction instances do not have a prototype property as they are not constructable.

Each AsyncFunction instance has the following own properties:

25.7.4.1 length

The specification for the **"length"** property of Function instances given in 19.2.4.1 also applies to AsyncFunction instances.

25.7.4.2 name

The specification for the **"name"** property of Function instances given in 19.2.4.2 also applies to AsyncFunction instances.

25.7.5 Async Functions Abstract Operations

25.7.5.1 AsyncFunctionStart (*promiseCapability*, *asyncFunctionBody*)

1. Let *runningContext* be the running execution context.
2. Let *asyncContext* be a copy of *runningContext*.
3. NOTE: Copying the execution state is required for the step below to resume its execution. It is ill-defined to resume a currently executing context.
4. Set the code evaluation state of *asyncContext* such that when evaluation is resumed for that execution context the following steps will be performed:
    a. Let *result* be the result of evaluating *asyncFunctionBody*.
    b. Assert: If we return here, the async function either threw an exception or performed an implicit or explicit return; all awaiting is done.
    c. Remove *asyncContext* from the execution context stack and restore the execution context that is at the top of the execution context stack as the running execution context.
    d. If *result*.[[Type]] is normal, then
        i. Perform ! Call(*promiseCapability*.[[Resolve]], **undefined**, « **undefined** »).
    e. Else if *result*.[[Type]] is return, then
        i. Perform ! Call(*promiseCapability*.[[Resolve]], **undefined**, « *result*.[[Value]] »).
    f. Else,
        i. Assert: *result*.[[Type]] is throw.
        ii. Perform ! Call(*promiseCapability*.[[Reject]], **undefined**, « *result*.[[Value]] »).
    g. Return.
5. Push *asyncContext* onto the execution context stack; *asyncContext* is now the running execution context.
6. Resume the suspended evaluation of *asyncContext*. Let *result* be the value returned by the resumed computation.

7. Assert: When we return here, *asyncContext* has already been removed from the execution context stack and *runningContext* is the currently running execution context.
8. Assert: *result* is a normal completion with a value of **undefined**. The possible sources of completion values are Await or, if the async function doesn't await anything, the step 4.g above.
9. Return.

26 Reflection

26.1 The Reflect Object

The Reflect object:

- is the intrinsic object *%Reflect%*.
- is the initial value of the **"Reflect"** property of the global object.
- is an ordinary object.
- has a [[Prototype]] internal slot whose value is %Object.prototype%.
- is not a function object.
- does not have a [[Construct]] internal method; it cannot be used as a constructor with the **`new`** operator.
- does not have a [[Call]] internal method; it cannot be invoked as a function.

26.1.1 Reflect.apply (*target*, *thisArgument*, *argumentsList*)

When the **`apply`** function is called with arguments *target*, *thisArgument*, and *argumentsList*, the following steps are taken:

1. If IsCallable(*target*) is **false**, throw a **TypeError** exception.
2. Let *args* be ? CreateListFromArrayLike(*argumentsList*).
3. Perform PrepareForTailCall().
4. Return ? Call(*target*, *thisArgument*, *args*).

26.1.2 Reflect.construct (*target*, *argumentsList* [, *newTarget*])

When the **`construct`** function is called with arguments *target*, *argumentsList*, and *newTarget*, the following steps are taken:

1. If IsConstructor(*target*) is **false**, throw a **TypeError** exception.
2. If *newTarget* is not present, set *newTarget* to *target*.
3. Else if IsConstructor(*newTarget*) is **false**, throw a **TypeError** exception.
4. Let *args* be ? CreateListFromArrayLike(*argumentsList*).
5. Return ? Construct(*target*, *args*, *newTarget*).

26.1.3 Reflect.defineProperty (*target*, *propertyKey*, *attributes*)

When the **`defineProperty`** function is called with arguments *target*, *propertyKey*, and *attributes*, the following steps are taken:

1. If Type(*target*) is not Object, throw a **TypeError** exception.
2. Let *key* be ? ToPropertyKey(*propertyKey*).
3. Let *desc* be ? ToPropertyDescriptor(*attributes*).
4. Return ? *target*.[[DefineOwnProperty]](*key*, *desc*).

26.1.4 Reflect.deleteProperty (*target*, *propertyKey*)

When the **`deleteProperty`** function is called with arguments *target* and *propertyKey*, the following steps are taken:

1. If Type(*target*) is not Object, throw a **TypeError** exception.
2. Let *key* be ? ToPropertyKey(*propertyKey*).
3. Return ? *target*.[[Delete]](*key*).

26.1.5 Reflect.get (*target*, *propertyKey* [, *receiver*])

When the **`get`** function is called with arguments *target*, *propertyKey*, and *receiver*, the following steps are taken:

1. If Type(*target*) is not Object, throw a **TypeError** exception.
2. Let *key* be ? ToPropertyKey(*propertyKey*).
3. If *receiver* is not present, then
    a. Set *receiver* to *target*.
4. Return ? *target*.[[Get]](*key*, *receiver*).

26.1.6 Reflect.getOwnPropertyDescriptor (*target*, *propertyKey*)

When the **`getOwnPropertyDescriptor`** function is called with arguments *target* and *propertyKey*, the following steps are taken:

1. If Type(*target*) is not Object, throw a **TypeError** exception.
2. Let *key* be ? ToPropertyKey(*propertyKey*).
3. Let *desc* be ? *target*.[[GetOwnProperty]](*key*).
4. Return FromPropertyDescriptor(*desc*).

26.1.7 Reflect.getPrototypeOf (*target*)

When the **`getPrototypeOf`** function is called with argument *target*, the following steps are taken:

1. If Type(*target*) is not Object, throw a **TypeError** exception.
2. Return ? *target*.[[GetPrototypeOf]]().

26.1.8 Reflect.has (*target*, *propertyKey*)

When the **`has`** function is called with arguments *target* and *propertyKey*, the following steps are taken:

1. If Type(*target*) is not Object, throw a **TypeError** exception.
2. Let *key* be ? ToPropertyKey(*propertyKey*).
3. Return ? *target*.[[HasProperty]](*key*).

26.1.9 Reflect.isExtensible (*target*)

When the **`isExtensible`** function is called with argument *target*, the following steps are taken:

1. If Type(*target*) is not Object, throw a **TypeError** exception.
2. Return ? *target*.[[IsExtensible]]().

26.1.10 Reflect.ownKeys (*target*)

When the **`ownKeys`** function is called with argument *target*, the following steps are taken:

1. If Type(*target*) is not Object, throw a **TypeError** exception.
2. Let *keys* be ? *target*.[[OwnPropertyKeys]]().
3. Return CreateArrayFromList(*keys*).

26.1.11 Reflect.preventExtensions (*target*)

When the **`preventExtensions`** function is called with argument *target*, the following steps are taken:

1. If Type(*target*) is not Object, throw a **TypeError** exception.
2. Return ? *target*.[[PreventExtensions]]().

26.1.12 Reflect.set (*target*, *propertyKey*, *V* [, *receiver*])

When the **`set`** function is called with arguments *target*, *V*, *propertyKey*, and *receiver*, the following steps are taken:

1. If Type(*target*) is not Object, throw a **TypeError** exception.
2. Let *key* be ? ToPropertyKey(*propertyKey*).
3. If *receiver* is not present, then
    a. Set *receiver* to *target*.
4. Return ? *target*.[[Set]](*key*, *V*, *receiver*).

26.1.13 Reflect.setPrototypeOf (*target*, *proto*)

When the **`setPrototypeOf`** function is called with arguments *target* and *proto*, the following steps are taken:

1. If Type(*target*) is not Object, throw a **TypeError** exception.
2. If Type(*proto*) is not Object and *proto* is not **null**, throw a **TypeError** exception.
3. Return ? *target*.[[SetPrototypeOf]](*proto*).

26.2 Proxy Objects

26.2.1 The Proxy Constructor

The Proxy constructor:

- is the intrinsic object *%Proxy%*.
- is the initial value of the **"Proxy"** property of the global object.

- creates and initializes a new proxy exotic object when called as a constructor.
- is not intended to be called as a function and will throw an exception when called in that manner.

26.2.1.1 Proxy (*target*, *handler*)

When **`Proxy`** is called with arguments *target* and *handler*, it performs the following steps:

1. If NewTarget is **undefined**, throw a **TypeError** exception.
2. Return ? ProxyCreate(*target*, *handler*).

26.2.2 Properties of the Proxy Constructor

The Proxy constructor:

- has a [[Prototype]] internal slot whose value is %Function.prototype%.
- does not have a **"prototype"** property because proxy exotic objects do not have a [[Prototype]] internal slot that requires initialization.
- has the following properties:

26.2.2.1 Proxy.revocable (*target*, *handler*)

The **`Proxy.revocable`** function is used to create a revocable Proxy object. When **`Proxy.revocable`** is called with arguments *target* and *handler*, the following steps are taken:

1. Let *p* be ? ProxyCreate(*target*, *handler*).
2. Let *steps* be the algorithm steps defined in Proxy Revocation Functions.
3. Let *revoker* be ! CreateBuiltinFunction(*steps*, « [[RevocableProxy]] »).
4. Set *revoker*.[[RevocableProxy]] to *p*.
5. Let *result* be OrdinaryObjectCreate(%Object.prototype%).
6. Perform ! CreateDataPropertyOrThrow(*result*, **"proxy"**, *p*).
7. Perform ! CreateDataPropertyOrThrow(*result*, **"revoke"**, *revoker*).
8. Return *result*.

26.2.2.1.1 Proxy Revocation Functions

A Proxy revocation function is an anonymous built-in function that has the ability to invalidate a specific Proxy object.

Each Proxy revocation function has a [[RevocableProxy]] internal slot.

When a Proxy revocation function is called, the following steps are taken:

1. Let *F* be the active function object.
2. Let *p* be *F*.[[RevocableProxy]].
3. If *p* is **null**, return **undefined**.
4. Set *F*.[[RevocableProxy]] to **null**.
5. Assert: *p* is a Proxy object.
6. Set *p*.[[ProxyTarget]] to **null**.
7. Set *p*.[[ProxyHandler]] to **null**.
8. Return **undefined**.

The **"length"** property of a Proxy revocation function is 0.

26.3 Module Namespace Objects

A Module Namespace Object is a module namespace exotic object that provides runtime property-based access to a module's exported bindings. There is no constructor function for Module Namespace Objects. Instead, such an object is created for each module that is imported by an *ImportDeclaration* that includes a *NameSpaceImport*.

In addition to the properties specified in 9.4.6 each Module Namespace Object has the following own property:

26.3.1 @@toStringTag

The initial value of the @@toStringTag property is the String value **"Module"**.

This property has the attributes { [[Writable]]: **false**, [[Enumerable]]: **false**, [[Configurable]]: **false** }.

27 Memory Model

The memory consistency model, or *memory model*, specifies the possible orderings of Shared Data Block events, arising via accessing TypedArray instances backed by a SharedArrayBuffer and via methods on the Atomics object. When the program has no data races (defined below), the ordering of events appears as sequentially consistent, i.e., as an interleaving of actions from each agent. When the program has data races, shared memory operations may appear sequentially inconsistent. For example, programs may exhibit causality-violating behaviour and other astonishments. These astonishments arise from compiler transforms and the design of CPUs (e.g., out-of-order execution and speculation). The memory model defines both the precise conditions under which a program exhibits sequentially consistent behaviour as well as the possible values read from data races. To wit, there is no undefined behaviour.

The memory model is defined as relational constraints on events introduced by abstract operations on SharedArrayBuffer or by methods on the Atomics object during an evaluation.

NOTE This section provides an axiomatic model on events introduced by the abstract operations on SharedArrayBuffers. It bears stressing that the model is not expressible algorithmically, unlike the rest of this specification. The nondeterministic introduction of events by abstract operations is the interface between the operational semantics of ECMAScript evaluation and the axiomatic semantics of the memory model. The semantics of these events is defined by considering graphs of all events in an evaluation. These are neither Static Semantics nor Runtime Semantics. There is no demonstrated algorithmic implementation, but instead a set of constraints that determine if a particular event graph is allowed or disallowed.

27.1 Memory Model Fundamentals

Shared memory accesses (reads and writes) are divided into two groups, atomic accesses and data accesses, defined below. Atomic accesses are sequentially consistent, i.e., there is a strict total ordering of events agreed upon by all agents in an agent cluster. Non-atomic accesses do not have a strict total ordering agreed upon by all agents, i.e., unordered.

NOTE 1 No orderings weaker than sequentially consistent and stronger than unordered, such as release-acquire, are supported.

A *Shared Data Block event* is either a *ReadSharedMemory*, *WriteSharedMemory*, or *ReadModifyWriteSharedMemory* Record.

Table 79: ReadSharedMemory Event Fields

Field Name	Value	Meaning
[[Order]]	SeqCst | Unordered	The weakest ordering guaranteed by the memory model for the event.
[[NoTear]]	A Boolean	Whether this event is allowed to read from multiple write events on equal range as this event.
[[Block]]	A Shared Data Block	The block the event operates on.
[[ByteIndex]]	A nonnegative integer	The byte address of the read in [[Block]].
[[ElementSize]]	A nonnegative integer	The size of the read.

Table 80: WriteSharedMemory Event Fields

Field Name	Value	Meaning
[[Order]]	SeqCst | Unordered | Init	The weakest ordering guaranteed by the memory model for the event.
[[NoTear]]	A Boolean	Whether this event is allowed to be read from multiple read events with equal range as this event.
[[Block]]	A Shared Data Block	The block the event operates on.
[[ByteIndex]]	A nonnegative integer	The byte address of the write in [[Block]].
[[ElementSize]]	A nonnegative integer	The size of the write.
[[Payload]]	A List	The List of byte values to be read by other events.

Table 81: ReadModifyWriteSharedMemory Event Fields

Field Name	Value	Meaning
[[Order]]	SeqCst	Read-modify-write events are always sequentially consistent.
[[NoTear]]	**true**	Read-modify-write events cannot tear.
[[Block]]	A Shared Data Block	The block the event operates on.
[[ByteIndex]]	A nonnegative integer	The byte address of the read-modify-write in [[Block]].
[[ElementSize]]	A nonnegative integer	The size of the read-modify-write.
[[Payload]]	A List	The List of byte values to be passed to [[ModifyOp]].
[[ModifyOp]]	A semantic function	A pure semantic function that returns a modified List of byte values from a read List of byte values and [[Payload]].

These events are introduced by abstract operations or by methods on the Atomics object.

Some operations may also introduce *Synchronize* events. A *Synchronize event* has no fields, and exists purely to directly constrain the permitted orderings of other events.

In addition to Shared Data Block and Synchronize events, there are host-specific events.

Let the range of a ReadSharedMemory, WriteSharedMemory, or ReadModifyWriteSharedMemory event be the Set of contiguous integers from its [[ByteIndex]] to [[ByteIndex]] + [[ElementSize]] - 1. Two events' ranges are equal when the events have the same [[Block]], and the ranges are element-wise equal. Two events' ranges are overlapping when the events have the same [[Block]], the ranges are not equal and their intersection is non-empty. Two events' ranges are disjoint when the events do not have the same [[Block]] or their ranges are neither equal nor overlapping.

NOTE 2 Examples of host-specific synchronizing events that should be accounted for are: sending a SharedArrayBuffer from one agent to another (e.g., by `postMessage` in a browser), starting and stopping agents, and communicating within the agent cluster via channels other than shared memory. It is assumed those events are appended to agent-order during evaluation like the other SharedArrayBuffer events.

Events are ordered within candidate executions by the relations defined below.

27.2 Agent Events Records

An *Agent Events Record* is a Record with the following fields.

Table 82: **Agent Events Record** Fields

Field Name	Value	Meaning
[[AgentSignifier]]	A value that admits equality testing	The agent whose evaluation resulted in this ordering.
[[EventList]]	A List of events	Events are appended to the list during evaluation.
[[AgentSynchronizesWith]]	A List of pairs of Synchronize events	Synchronize relationships introduced by the operational semantics.

27.3 Chosen Value Records

A *Chosen Value Record* is a Record with the following fields.

Table 83: **Chosen Value Record** Fields

Field Name	Value	Meaning
[[Event]]	A Shared Data Block event	The ReadSharedMemory or ReadModifyWriteSharedMemory event that was introduced for this chosen value.
[[ChosenValue]]	A List of byte values	The bytes that were nondeterministically chosen during evaluation.

27.4 Candidate Executions

A *candidate execution* of the evaluation of an agent cluster is a Record with the following fields.

Table 84: Candidate Execution Record Fields

Field Name	Value	Meaning
[[EventsRecords]]	A List of Agent Events Records.	Maps an agent to Lists of events appended during the evaluation.
[[ChosenValues]]	A List of Chosen Value Records.	Maps ReadSharedMemory or ReadModifyWriteSharedMemory events to the List of byte values chosen during the evaluation.
[[AgentOrder]]	An agent-order Relation.	Defined below.
[[ReadsBytesFrom]]	A reads-bytes-from semantic function.	Defined below.
[[ReadsFrom]]	A reads-from Relation.	Defined below.
[[HostSynchronizesWith]]	A host-synchronizes-with Relation.	Defined below.
[[SynchronizesWith]]	A synchronizes-with Relation.	Defined below.
[[HappensBefore]]	A happens-before Relation.	Defined below.

An *empty candidate execution* is a candidate execution Record whose fields are empty Lists and Relations.

27.5 Abstract Operations for the Memory Model

27.5.1 EventSet (*execution*)

The abstract operation EventSet takes one argument, a candidate execution *execution*. It performs the following steps:

1. Let *events* be an empty Set.
2. For each Agent Events Record *aer* in *execution*.[[EventsRecords]], do
    a. For each event *E* in *aer*.[[EventList]], do
        i. Add *E* to *events*.
3. Return *events*.

27.5.2 SharedDataBlockEventSet (*execution*)

The abstract operation SharedDataBlockEventSet takes one argument, a candidate execution *execution*. It performs the following steps:

1. Let *events* be an empty Set.

2. For each event *E* in EventSet(*execution*), do
    a. If *E* is a ReadSharedMemory, WriteSharedMemory, or ReadModifyWriteSharedMemory event, add *E* to *events*.
3. Return *events*.

27.5.3 HostEventSet (*execution*)

The abstract operation HostEventSet takes one argument, a candidate execution *execution*. It performs the following steps:

1. Let *events* be an empty Set.
2. For each event *E* in EventSet(*execution*), do
    a. If *E* is not in SharedDataBlockEventSet(*execution*), add *E* to *events*.
3. Return *events*.

27.5.4 ComposeWriteEventBytes (*execution*, *byteIndex*, *Ws*)

The abstract operation ComposeWriteEventBytes takes four arguments, a candidate execution *execution*, a nonnegative integer *byteIndex*, and a List *Ws* of WriteSharedMemory or ReadModifyWriteSharedMemory events. It performs the following steps:

1. Let *byteLocation* be *byteIndex*.
2. Let *bytesRead* be a new empty List.
3. For each element *W* of *Ws* in List order, do
    a. Assert: *W* has *byteLocation* in its range.
    b. Let *payloadIndex* be *byteLocation* - *W*.[[ByteIndex]].
    c. If *W* is a WriteSharedMemory event, then
        i. Let *byte* be *W*.[[Payload]][*payloadIndex*].
    d. Else,
        i. Assert: *W* is a ReadModifyWriteSharedMemory event.
        ii. Let *bytes* be ValueOfReadEvent(*execution*, *W*).
        iii. Let *bytesModified* be *W*.[[ModifyOp]](*bytes*, *W*.[[Payload]]).
        iv. Let *byte* be *bytesModified*[*payloadIndex*].
    e. Append *byte* to *bytesRead*.
    f. Set *byteLocation* to *byteLocation* + 1.
4. Return *bytesRead*.

NOTE 1 The semantic function [[ModifyOp]] is given by the function properties on the Atomics object that introduce ReadModifyWriteSharedMemory events.

NOTE 2 This abstract operation composes a List of write events into a List of byte values. It is used in the event semantics of ReadSharedMemory and ReadModifyWriteSharedMemory events.

27.5.5 ValueOfReadEvent (*execution*, *R*)

The abstract operation ValueOfReadEvent takes two arguments, a candidate execution *execution* and a

ReadSharedMemory or ReadModifyWriteSharedMemory event *R*. It performs the following steps:

1. Assert: *R* is a ReadSharedMemory or ReadModifyWriteSharedMemory event.
2. Let *Ws* be *execution*.[[ReadsBytesFrom]](*R*).
3. Assert: *Ws* is a List of WriteSharedMemory or ReadModifyWriteSharedMemory events with length equal to *R*.[[ElementSize]].
4. Return ComposeWriteEventBytes(*execution*, *R*.[[ByteIndex]], *Ws*).

27.6 Relations of Candidate Executions

27.6.1 agent-order

For a candidate execution *execution*, *execution*.[[AgentOrder]] is a Relation on events that satisfies the following.

- For each pair (*E*, *D*) in EventSet(*execution*), (*E*, *D*) is in *execution*.[[AgentOrder]] if there is some Agent Events Record *aer* in *execution*.[[EventsRecords]] such that *E* and *D* are in *aer*.[[EventList]] and *E* is before *D* in List order of *aer*.[[EventList]].

> NOTE Each agent introduces events in a per-agent strict total order during the evaluation. This is the union of those strict total orders.

27.6.2 reads-bytes-from

For a candidate execution *execution*, *execution*.[[ReadsBytesFrom]] is a semantic function from events in SharedDataBlockEventSet(*execution*) to Lists of events in SharedDataBlockEventSet(*execution*) that satisfies the following conditions.

- For each ReadSharedMemory or ReadModifyWriteSharedMemory event *R* in SharedDataBlockEventSet(*execution*), *execution*.[[ReadsBytesFrom]](*R*) is a List of length equal to *R*.[[ElementSize]] of WriteSharedMemory or ReadModifyWriteSharedMemory events *Ws* such that all of the following are true.
  - Each event *W* with index *i* in *Ws* has *R*.[[ByteIndex]] + *i* in its range.
  - *R* is not in *Ws*.

27.6.3 reads-from

For a candidate execution *execution*, *execution*.[[ReadsFrom]] is the least Relation on events that satisfies the following.

- For each pair (*R*, *W*) in SharedDataBlockEventSet(*execution*), (*R*, *W*) is in *execution*.[[ReadsFrom]] if *W* is in *execution*.[[ReadsBytesFrom]](*R*).

27.6.4 host-synchronizes-with

For a candidate execution *execution*, *execution*.[[HostSynchronizesWith]] is a host-provided strict partial order on host-specific events that satisfies at least the following.

- If (*E*, *D*) is in *execution*.[[HostSynchronizesWith]], *E* and *D* are in HostEventSet(*execution*).
- There is no cycle in the union of *execution*.[[HostSynchronizesWith]] and *execution*.[[AgentOrder]].

NOTE 1 For two host-specific events *E* and *D*, *E* host-synchronizes-with *D* implies *E* happens-before *D*.

NOTE 2 The host-synchronizes-with relation allows the host to provide additional synchronization mechanisms, such as **`postMessage`** between HTML workers.

27.6.5 synchronizes-with

For a candidate execution *execution*, *execution*.[[SynchronizesWith]] is the least Relation on events that satisfies the following.

- For each pair (*R*, *W*) in *execution*.[[ReadsFrom]], (*W*, *R*) is in *execution*.[[SynchronizesWith]] if *R*.[[Order]] is SeqCst, *W*.[[Order]] is SeqCst, and *R* and *W* have equal ranges.
- For each element *eventsRecord* of *execution*.[[EventsRecords]], the following is true.
  - For each pair (*S*, *Sw*) in *eventsRecord*.[[AgentSynchronizesWith]], (*S*, *Sw*) is in *execution*.[[SynchronizesWith]].
- For each pair (*E*, *D*) in *execution*.[[HostSynchronizesWith]], (*E*, *D*) is in *execution*.[[SynchronizesWith]].

NOTE 1 Owing to convention, write events synchronizes-with read events, instead of read events synchronizes-with write events.

NOTE 2 Init events do not participate in synchronizes-with, and are instead constrained directly by happens-before.

NOTE 3 Not all SeqCst events related by reads-from are related by synchronizes-with. Only events that also have equal ranges are related by synchronizes-with.

NOTE 4 For Shared Data Block events *R* and *W* such that *W* synchronizes-with *R*, *R* may reads-from other writes than *W*.

27.6.6 happens-before

For a candidate execution *execution*, *execution*.[[HappensBefore]] is the least Relation on events that satisfies the following.

- For each pair (*E*, *D*) in *execution*.[[AgentOrder]], (*E*, *D*) is in *execution*.[[HappensBefore]].
- For each pair (*E*, *D*) in *execution*.[[SynchronizesWith]], (*E*, *D*) is in *execution*.[[HappensBefore]].
- For each pair (*E*, *D*) in SharedDataBlockEventSet(*execution*), (*E*, *D*) is in *execution*.[[HappensBefore]] if *E*.[[Order]] is Init and *E* and *D* have overlapping ranges.
- For each pair (*E*, *D*) in EventSet(*execution*), (*E*, *D*) is in *execution*.[[HappensBefore]] if there is an event *F* such that the pairs (*E*, *F*) and (*F*, *D*) are in *execution*.[[HappensBefore]].

NOTE Because happens-before is a superset of agent-order, candidate executions are consistent with the single-thread evaluation semantics of ECMAScript.

27.7 Properties of Valid Executions

27.7.1 Valid Chosen Reads

A candidate execution *execution* has valid chosen reads if the following abstract operation returns **true**.

1. For each ReadSharedMemory or ReadModifyWriteSharedMemory event *R* in SharedDataBlockEventSet(*execution*), do
    a. Let *chosenValueRecord* be the element of *execution*.[[ChosenValues]] whose [[Event]] field is *R*.
    b. Let *chosenValue* be *chosenValueRecord*.[[ChosenValue]].
    c. Let *readValue* be ValueOfReadEvent(*execution*, *R*).
    d. Let *chosenLen* be the number of elements of *chosenValue*.
    e. Let *readLen* be the number of elements of *readValue*.
    f. If *chosenLen* is not equal to *readLen*, then
        i. Return **false**.
    g. If *chosenValue*[*i*] is not equal to *readValue*[*i*] for any integer value *i* in the range 0 through *chosenLen*, exclusive, then
        i. Return **false**.
2. Return **true**.

27.7.2 Coherent Reads

A candidate execution *execution* has coherent reads if the following abstract operation returns **true**.

1. For each ReadSharedMemory or ReadModifyWriteSharedMemory event *R* in SharedDataBlockEventSet(*execution*), do
    a. Let *Ws* be *execution*.[[ReadsBytesFrom]](*R*).
    b. Let *byteLocation* be *R*.[[ByteIndex]].
    c. For each element *W* of *Ws* in List order, do
        i. If (*R*, *W*) is in *execution*.[[HappensBefore]], then
            1. Return **false**.
        ii. If there is a WriteSharedMemory or ReadModifyWriteSharedMemory event *V* that has *byteLocation* in its range such that the pairs (*W*, *V*) and (*V*, *R*) are in *execution*.[[HappensBefore]], then
            1. Return **false**.
        iii. Set *byteLocation* to *byteLocation* + 1.
2. Return **true**.

27.7.3 Tear Free Reads

A candidate execution *execution* has tear free reads if the following abstract operation returns **true**.

1. For each ReadSharedMemory or ReadModifyWriteSharedMemory event *R* in

SharedDataBlockEventSet(*execution*), do

a. If *R*.[[NoTear]] is **true**, then

i. Assert: The remainder of dividing *R*.[[ByteIndex]] by *R*.[[ElementSize]] is 0.

ii. For each event *W* such that (*R*, *W*) is in *execution*.[[ReadsFrom]] and *W*.[[NoTear]] is **true**, do

1. If *R* and *W* have equal ranges, and there is an event *V* such that *V* and *W* have equal ranges, *V*.[[NoTear]] is **true**, *W* is not *V*, and (*R*, *V*) is in *execution*.[[ReadsFrom]], then

a. Return **false**.

2. Return **true**.

NOTE An event's [[NoTear]] field is **true** when that event was introduced via accessing an integer TypedArray, and **false** when introduced via accessing a floating point TypedArray or DataView.

Intuitively, this requirement says when a memory range is accessed in an aligned fashion via an integer TypedArray, a single write event on that range must "win" when in a data race with other write events with equal ranges. More precisely, this requirement says an aligned read event cannot read a value composed of bytes from multiple, different write events all with equal ranges. It is possible, however, for an aligned read event to read from multiple write events with overlapping ranges.

27.7.4 Sequentially Consistent Atomics

For a candidate execution *execution*, memory-order is a strict total order of all events in EventSet(*execution*) that satisfies the following.

- For each pair (*E*, *D*) in *execution*.[[HappensBefore]], (*E*, *D*) is in memory-order.
- For each pair (*R*, *W*) in *execution*.[[ReadsFrom]], there is no WriteSharedMemory or ReadModifyWriteSharedMemory event *V* in SharedDataBlockEventSet(*execution*) such that *V*.[[Order]] is SeqCst, the pairs (*W*, *V*) and (*V*, *R*) are in memory-order, and any of the following conditions are true.
  - The pair (*W*, *R*) is in *execution*.[[SynchronizesWith]], and *V* and *R* have equal ranges.
  - The pairs (*W*, *R*) and (*V*, *R*) are in *execution*.[[HappensBefore]], *W*.[[Order]] is SeqCst, and *W* and *V* have equal ranges.
  - The pairs (*W*, *R*) and (*W*, *V*) are in *execution*.[[HappensBefore]], *R*.[[Order]] is SeqCst, and *V* and *R* have equal ranges.

  NOTE 1 This clause additionally constrains SeqCst events on equal ranges.

- For each WriteSharedMemory or ReadModifyWriteSharedMemory event *W* in SharedDataBlockEventSet(*execution*), if *W*.[[Order]] is SeqCst, then it is not the case that there is an infinite number of ReadSharedMemory or ReadModifyWriteSharedMemory events in SharedDataBlockEventSet(*execution*) with equal range that is memory-order before *W*.

  NOTE 2 This clause together with the forward progress guarantee on agents ensure the liveness condition that SeqCst writes become visible to SeqCst reads with equal range in finite time.

A candidate execution has sequentially consistent atomics if a memory-order exists.

> NOTE 3 While memory-order includes all events in EventSet(*execution*), those that are not constrained by happens-before or synchronizes-with are allowed to occur anywhere in the order.

27.7.5 Valid Executions

A candidate execution *execution* is a valid execution (or simply an execution) if all of the following are true.

- The host provides a host-synchronizes-with Relation for *execution*.[[HostSynchronizesWith]].
- *execution*.[[HappensBefore]] is a strict partial order.
- *execution* has valid chosen reads.
- *execution* has coherent reads.
- *execution* has tear free reads.
- *execution* has sequentially consistent atomics.

All programs have at least one valid execution.

27.8 Races

For an execution *execution*, two events *E* and *D* in SharedDataBlockEventSet(*execution*) are in a race if the following abstract operation returns **true**.

1. If *E* is not *D*, then
    a. If the pairs (*E*, *D*) and (*D*, *E*) are not in *execution*.[[HappensBefore]], then
        i. If *E* and *D* are both WriteSharedMemory or ReadModifyWriteSharedMemory events and *E* and *D* do not have disjoint ranges, then
            1. Return **true**.
        ii. If either (*E*, *D*) or (*D*, *E*) is in *execution*.[[ReadsFrom]], then
            1. Return **true**.
2. Return **false**.

27.9 Data Races

For an execution *execution*, two events *E* and *D* in SharedDataBlockEventSet(*execution*) are in a data race if the following abstract operation returns **true**.

1. If *E* and *D* are in a race in *execution*, then
    a. If *E*.[[Order]] is not SeqCst or *D*.[[Order]] is not SeqCst, then
        i. Return **true**.
    b. If *E* and *D* have overlapping ranges, then
        i. Return **true**.
2. Return **false**.

27.10 Data Race Freedom

An execution *execution* is data race free if there are no two events in SharedDataBlockEventSet(*execution*) that are in a data race.

A program is data race free if all its executions are data race free.

The memory model guarantees sequential consistency of all events for data race free programs.

27.11 Shared Memory Guidelines

NOTE 1 The following are guidelines for ECMAScript programmers working with shared memory.

We recommend programs be kept data race free, i.e., make it so that it is impossible for there to be concurrent non-atomic operations on the same memory location. Data race free programs have interleaving semantics where each step in the evaluation semantics of each agent are interleaved with each other. For data race free programs, it is not necessary to understand the details of the memory model. The details are unlikely to build intuition that will help one to better write ECMAScript.

More generally, even if a program is not data race free it may have predictable behaviour, so long as atomic operations are not involved in any data races and the operations that race all have the same access size. The simplest way to arrange for atomics not to be involved in races is to ensure that different memory cells are used by atomic and non-atomic operations and that atomic accesses of different sizes are not used to access the same cells at the same time. Effectively, the program should treat shared memory as strongly typed as much as possible. One still cannot depend on the ordering and timing of non-atomic accesses that race, but if memory is treated as strongly typed the racing accesses will not "tear" (bits of their values will not be mixed).

NOTE 2 The following are guidelines for ECMAScript implementers writing compiler transformations for programs using shared memory.

It is desirable to allow most program transformations that are valid in a single-agent setting in a multi-agent setting, to ensure that the performance of each agent in a multi-agent program is as good as it would be in a single-agent setting. Frequently these transformations are hard to judge. We outline some rules about program transformations that are intended to be taken as normative (in that they are implied by the memory model or stronger than what the memory model implies) but which are likely not exhaustive. These rules are intended to apply to program transformations that precede the introductions of the events that make up the agent-order.

Let an *agent-order slice* be the subset of the agent-order pertaining to a single agent.

Let *possible read values* of a read event be the set of all values of ValueOfReadEvent for that event across all valid executions.

Any transformation of an agent-order slice that is valid in the absence of shared memory is valid in the presence of shared memory, with the following exceptions.

- *Atomics are carved in stone*: Program transformations must not cause the SeqCst events in an agent-order slice to be reordered with its Unordered operations, nor its SeqCst operations to be reordered with each other, nor may a program transformation remove a

SeqCst operation from the agent-order.

(In practice, the prohibition on reorderings forces a compiler to assume that every SeqCst operation is a synchronization and included in the final memory-order, which it would usually have to assume anyway in the absence of inter-agent program analysis. It also forces the compiler to assume that every call where the callee's effects on the memory-order are unknown may contain SeqCst operations.)

- *Reads must be stable*: Any given shared memory read must only observe a single value in an execution.

  (For example, if what is semantically a single read in the program is executed multiple times then the program is subsequently allowed to observe only one of the values read. A transformation known as rematerialization can violate this rule.)

- *Writes must be stable*: All observable writes to shared memory must follow from program semantics in an execution.

  (For example, a transformation may not introduce certain observable writes, such as by using read-modify-write operations on a larger location to write a smaller datum, writing a value to memory that the program could not have written, or writing a just-read value back to the location it was read from, if that location could have been overwritten by another agent after the read.)

- *Possible read values must be nonempty*: Program transformations cannot cause the possible read values of a shared memory read to become empty.

  (Counterintuitively, this rule in effect restricts transformations on writes, because writes have force in memory model insofar as to be read by read events. For example, writes may be moved and coalesced and sometimes reordered between two SeqCst operations, but the transformation may not remove every write that updates a location; some write must be preserved.)

Examples of transformations that remain valid are: merging multiple non-atomic reads from the same location, reordering non-atomic reads, introducing speculative non-atomic reads, merging multiple non-atomic writes to the same location, reordering non-atomic writes to different locations, and hoisting non-atomic reads out of loops even if that affects termination. Note in general that aliased TypedArrays make it hard to prove that locations are different.

NOTE 3 The following are guidelines for ECMAScript implementers generating machine code for shared memory accesses.

For architectures with memory models no weaker than those of ARM or Power, non-atomic stores and loads may be compiled to bare stores and loads on the target architecture. Atomic stores and loads may be compiled down to instructions that guarantee sequential consistency. If no such instructions exist, memory barriers are to be employed, such as placing barriers on both sides of a bare store or load. Read-modify-write operations may be compiled to read-modify-write instructions on the target architecture, such as **`LOCK`**-prefixed instructions on x86, load-exclusive/store-exclusive instructions on ARM, and load-link/store-conditional instructions on Power.

Specifically, the memory model is intended to allow code generation as follows.

- Every atomic operation in the program is assumed to be necessary.
- Atomic operations are never rearranged with each other or with non-atomic operations.
- Functions are always assumed to perform atomic operations.
- Atomic operations are never implemented as read-modify-write operations on larger data, but as non-lock-free atomics if the platform does not have atomic operations of the appropriate size. (We already assume that every platform has normal memory access operations of every interesting size.)

Naive code generation uses these patterns:

- Regular loads and stores compile to single load and store instructions.
- Lock-free atomic loads and stores compile to a full (sequentially consistent) fence, a regular load or store, and a full fence.
- Lock-free atomic read-modify-write accesses compile to a full fence, an atomic read-modify-write instruction sequence, and a full fence.
- Non-lock-free atomics compile to a spinlock acquire, a full fence, a series of non-atomic load and store instructions, a full fence, and a spinlock release.

That mapping is correct so long as an atomic operation on an address range does not race with a non-atomic write or with an atomic operation of different size. However, that is all we need: the memory model effectively demotes the atomic operations involved in a race to non-atomic status. On the other hand, the naive mapping is quite strong: it allows atomic operations to be used as sequentially consistent fences, which the memory model does not actually guarantee.

A number of local improvements to those basic patterns are also intended to be legal:

- There are obvious platform-dependent improvements that remove redundant fences. For example, on x86 the fences around lock-free atomic loads and stores can always be omitted except for the fence following a store, and no fence is needed for lock-free read-modify-write instructions, as these all use LOCK-prefixed instructions. On many platforms there are fences of several strengths, and weaker fences can be used in certain contexts without destroying sequential consistency.
- Most modern platforms support lock-free atomics for all the data sizes required by ECMAScript atomics. Should non-lock-free atomics be needed, the fences surrounding the body of the atomic operation can usually be folded into the lock and unlock steps. The simplest solution for non-lock-free atomics is to have a single lock word per SharedArrayBuffer.
- There are also more complicated platform-dependent local improvements, requiring some code analysis. For example, two back-to-back fences often have the same effect as a single fence, so if code is generated for two atomic operations in sequence, only a single fence need separate them. On x86, even a single fence separating atomic stores can be omitted, as the fence following a store is only needed to separate the store from a subsequent load.

A Grammar Summary

A.1 Lexical Grammar

SourceCharacter **::**

any Unicode code point

InputElementDiv **::**

WhiteSpace
LineTerminator
Comment
CommonToken
DivPunctuator
RightBracePunctuator

InputElementRegExp **::**

WhiteSpace
LineTerminator
Comment
CommonToken
RightBracePunctuator
RegularExpressionLiteral

InputElementRegExpOrTemplateTail **::**

WhiteSpace
LineTerminator
Comment
CommonToken
RegularExpressionLiteral
TemplateSubstitutionTail

InputElementTemplateTail **::**

WhiteSpace
LineTerminator
Comment
CommonToken
DivPunctuator
TemplateSubstitutionTail

WhiteSpace **::**

<TAB>
<VT>
<FF>
<SP>
<NBSP>
<ZWNBSP>
<USP>

LineTerminator **::**

<LF>
<CR>
<LS>
<PS>

LineTerminatorSequence **::**

<LF>
<CR> [lookahead ≠ <LF>]
<LS>

<PS>

<CR> <LF>

Comment ::

MultiLineComment

SingleLineComment

MultiLineComment ::

`/*` *MultiLineCommentChars*$_{opt}$ `*/`

MultiLineCommentChars ::

MultiLineNotAsteriskChar *MultiLineCommentChars*$_{opt}$

`*` *PostAsteriskCommentChars*$_{opt}$

PostAsteriskCommentChars ::

MultiLineNotForwardSlashOrAsteriskChar *MultiLineCommentChars*$_{opt}$

`*` *PostAsteriskCommentChars*$_{opt}$

MultiLineNotAsteriskChar ::

SourceCharacter but not `*`

MultiLineNotForwardSlashOrAsteriskChar ::

SourceCharacter but not one of `/` or `*`

SingleLineComment ::

`//` *SingleLineCommentChars*$_{opt}$

SingleLineCommentChars ::

SingleLineCommentChar *SingleLineCommentChars*$_{opt}$

SingleLineCommentChar ::

SourceCharacter but not *LineTerminator*

CommonToken ::

IdentifierName

Punctuator

NumericLiteral

StringLiteral

Template

IdentifierName ::

IdentifierStart

IdentifierName *IdentifierPart*

IdentifierStart ::

UnicodeIDStart

`$`

`_`

`\` *UnicodeEscapeSequence*

IdentifierPart ::

UnicodeIDContinue

`$`

`\` *UnicodeEscapeSequence*

<ZWNJ>

<ZWJ>

UnicodeIDStart ::

any Unicode code point with the Unicode property “ID_Start”

UnicodeIDContinue ::

any Unicode code point with the Unicode property “ID_Continue”

ReservedWord :: **one of**

```
await break case catch class const continue debugger default delete do else enum export extends false
    finally for function if import in instanceof new null return super switch this throw true try typeof var
    void while with yield
```

Punctuator ::

OptionalChainingPunctuator

OtherPunctuator

OptionalChainingPunctuator ::

`?.` [lookahead ∉ *DecimalDigit*]

OtherPunctuator :: **one of**

```
{ ( ) [ ] . ... ; , < > <= >= == != === !== + - * % ** ++ -- << >> >>> & | ^ ! ~ && || ?? ? : = += -= *= %= **=
    <<= >>= >>>= &= |= ^= =>
```

DivPunctuator ::

`/`

`/=`

RightBracePunctuator ::

`}`

NullLiteral ::

`null`

BooleanLiteral ::

`true`

`false`

NumericLiteral ::

DecimalLiteral

DecimalBigIntegerLiteral

NonDecimalIntegerLiteral

NonDecimalIntegerLiteral *BigIntLiteralSuffix*

DecimalBigIntegerLiteral ::

`0` *BigIntLiteralSuffix*

NonZeroDigit *DecimalDigits*$_{opt}$ *BigIntLiteralSuffix*

NonDecimalIntegerLiteral ::

BinaryIntegerLiteral

OctalIntegerLiteral

HexIntegerLiteral

BigIntLiteralSuffix ::

`n`

DecimalLiteral ::

DecimalIntegerLiteral `.` *DecimalDigits*$_{opt}$ *ExponentPart*$_{opt}$

`.` *DecimalDigits* *ExponentPart*$_{opt}$

DecimalIntegerLiteral *ExponentPart*$_{opt}$

DecimalIntegerLiteral ::

`0`

NonZeroDigit *DecimalDigits*$_{opt}$

DecimalDigits ::

DecimalDigit

DecimalDigits *DecimalDigit*

DecimalDigit :: **one of**

0 1 2 3 4 5 6 7 8 9

NonZeroDigit :: **one of**

1 2 3 4 5 6 7 8 9

ExponentPart ::

ExponentIndicator *SignedInteger*

ExponentIndicator :: **one of**

e E

SignedInteger ::

DecimalDigits

+ *DecimalDigits*

- *DecimalDigits*

BinaryIntegerLiteral ::

0b *BinaryDigits*

0B *BinaryDigits*

BinaryDigits ::

BinaryDigit

BinaryDigits *BinaryDigit*

BinaryDigit :: **one of**

0 1

OctalIntegerLiteral ::

0o *OctalDigits*

0O *OctalDigits*

OctalDigits ::

OctalDigit

OctalDigits *OctalDigit*

OctalDigit :: **one of**

0 1 2 3 4 5 6 7

HexIntegerLiteral ::

0x *HexDigits*

0X *HexDigits*

HexDigits ::

HexDigit

HexDigits *HexDigit*

HexDigit :: **one of**

0 1 2 3 4 5 6 7 8 9 a b c d e f A B C D E F

StringLiteral ::

" *DoubleStringCharacters*$_{opt}$ "

' *SingleStringCharacters*$_{opt}$ '

DoubleStringCharacters ::

DoubleStringCharacter *DoubleStringCharacters*$_{opt}$

SingleStringCharacters ::

SingleStringCharacter *SingleStringCharacters*$_{opt}$

DoubleStringCharacter ::

SourceCharacter but not one of " or \ or *LineTerminator*

<LS>

<PS>

\ *EscapeSequence*

LineContinuation

SingleStringCharacter **::**

SourceCharacter but not one of `'` or `\` or *LineTerminator*

<LS>

<PS>

`\` *EscapeSequence*

LineContinuation

LineContinuation **::**

`\` *LineTerminatorSequence*

EscapeSequence **::**

CharacterEscapeSequence

`0` [lookahead ∉ *DecimalDigit*]

HexEscapeSequence

UnicodeEscapeSequence

CharacterEscapeSequence **::**

SingleEscapeCharacter

NonEscapeCharacter

SingleEscapeCharacter **::** **one of**

`' " \ b f n r t v`

NonEscapeCharacter **::**

SourceCharacter but not one of *EscapeCharacter* or *LineTerminator*

EscapeCharacter **::**

SingleEscapeCharacter

DecimalDigit

`x`

`u`

HexEscapeSequence **::**

`x` *HexDigit* *HexDigit*

UnicodeEscapeSequence **::**

`u` *Hex4Digits*

`u{` *CodePoint* `}`

Hex4Digits **::** *HexDigit* *HexDigit* *HexDigit* *HexDigit*

RegularExpressionLiteral **::**

`/` *RegularExpressionBody* `/` *RegularExpressionFlags*

RegularExpressionBody **::**

RegularExpressionFirstChar *RegularExpressionChars*

RegularExpressionChars **::**

[empty]

RegularExpressionChars *RegularExpressionChar*

RegularExpressionFirstChar **::**

RegularExpressionNonTerminator but not one of `*` or `\` or `/` or `[`

RegularExpressionBackslashSequence

RegularExpressionClass

RegularExpressionChar **::**

RegularExpressionNonTerminator but not one of `\` or `/` or `[`

RegularExpressionBackslashSequence

RegularExpressionClass

RegularExpressionBackslashSequence **::**

`\` *RegularExpressionNonTerminator*

RegularExpressionNonTerminator ::

SourceCharacter but not *LineTerminator*

RegularExpressionClass ::

`[` *RegularExpressionClassChars* `]`

RegularExpressionClassChars ::

[empty]

RegularExpressionClassChars *RegularExpressionClassChar*

RegularExpressionClassChar ::

RegularExpressionNonTerminator but not one of `]` or `\`

RegularExpressionBackslashSequence

RegularExpressionFlags ::

[empty]

RegularExpressionFlags *IdentifierPart*

Template ::

NoSubstitutionTemplate

TemplateHead

NoSubstitutionTemplate ::

`` ` `` *TemplateCharacters*$_{opt}$ `` ` ``

TemplateHead ::

`` ` `` *TemplateCharacters*$_{opt}$ `${`

TemplateSubstitutionTail ::

TemplateMiddle

TemplateTail

TemplateMiddle ::

`}` *TemplateCharacters*$_{opt}$ `${`

TemplateTail ::

`}` *TemplateCharacters*$_{opt}$ `` ` ``

TemplateCharacters ::

TemplateCharacter *TemplateCharacters*$_{opt}$

TemplateCharacter ::

`$` [lookahead ≠ `{`]

`\` *EscapeSequence*

`\` *NotEscapeSequence*

LineContinuation

LineTerminatorSequence

SourceCharacter but not one of `` ` `` or `\` or `$` or *LineTerminator*

NotEscapeSequence ::

`0` *DecimalDigit*

DecimalDigit but not `0`

`x` [lookahead ∉ *HexDigit*]

`x` *HexDigit* [lookahead ∉ *HexDigit*]

`u` [lookahead ∉ *HexDigit*] [lookahead ≠ `{`]

`u` *HexDigit* [lookahead ∉ *HexDigit*]

`u` *HexDigit* *HexDigit* [lookahead ∉ *HexDigit*]

`u` *HexDigit* *HexDigit* *HexDigit* [lookahead ∉ *HexDigit*]

`u` `{` [lookahead ∉ *HexDigit*]

`u` `{` *NotCodePoint* [lookahead ∉ *HexDigit*]

`u` `{` *CodePoint* [lookahead ∉ *HexDigit*] [lookahead ≠ `}`]

NotCodePoint **::**

HexDigits but only if MV of *HexDigits* > 0x10FFFF

CodePoint **::**

HexDigits but only if MV of *HexDigits* ≤ 0x10FFFF

A.2 Expressions

IdentifierReference[Yield, Await] **:**

Identifier

[~Yield] **yield**

[~Await] **await**

BindingIdentifier[Yield, Await] **:**

Identifier

yield

await

LabelIdentifier[Yield, Await] **:**

Identifier

[~Yield] **yield**

[~Await] **await**

Identifier **:**

IdentifierName but not *ReservedWord*

PrimaryExpression[Yield, Await] **:**

this

IdentifierReference[?Yield, ?Await]

Literal

ArrayLiteral[?Yield, ?Await]

ObjectLiteral[?Yield, ?Await]

FunctionExpression

ClassExpression[?Yield, ?Await]

GeneratorExpression

AsyncFunctionExpression

AsyncGeneratorExpression

RegularExpressionLiteral

TemplateLiteral[?Yield, ?Await, ~Tagged]

CoverParenthesizedExpressionAndArrowParameterList[?Yield, ?Await]

CoverParenthesizedExpressionAndArrowParameterList[Yield, Await] **:**

`(` *Expression*[+In, ?Yield, ?Await] `)`

`(` *Expression*[+In, ?Yield, ?Await] `,` `)`

`(` `)`

`(` `...` *BindingIdentifier*[?Yield, ?Await] `)`

`(` `...` *BindingPattern*[?Yield, ?Await] `)`

`(` *Expression*[+In, ?Yield, ?Await] `,` `...` *BindingIdentifier*[?Yield, ?Await] `)`

`(` *Expression*[+In, ?Yield, ?Await] `,` `...` *BindingPattern*[?Yield, ?Await] `)`

When processing an instance of the production *PrimaryExpression*[Yield, Await] : *CoverParenthesizedExpressionAndArrowParameterList*[?Yield, ?Await] the interpretation of *CoverParenthesizedExpressionAndArrowParameterList* is refined using the following grammar:

ParenthesizedExpression[Yield, Await] :
  (*Expression*[+In, ?Yield, ?Await])

Literal :
  NullLiteral
  BooleanLiteral
  NumericLiteral
  StringLiteral

ArrayLiteral[Yield, Await] :
  [*Elision*opt]
  [*ElementList*[?Yield, ?Await]]
  [*ElementList*[?Yield, ?Await] , *Elision*opt]

ElementList[Yield, Await] :
  *Elision*opt *AssignmentExpression*[+In, ?Yield, ?Await]
  *Elision*opt *SpreadElement*[?Yield, ?Await]
  ElementList[?Yield, ?Await] , *Elision*opt *AssignmentExpression*[+In, ?Yield, ?Await]
  ElementList[?Yield, ?Await] , *Elision*opt *SpreadElement*[?Yield, ?Await]

Elision :
  ,
  Elision ,

SpreadElement[Yield, Await] :
  ... *AssignmentExpression*[+In, ?Yield, ?Await]

ObjectLiteral[Yield, Await] :
  { }
  { *PropertyDefinitionList*[?Yield, ?Await] }
  { *PropertyDefinitionList*[?Yield, ?Await] , }

PropertyDefinitionList[Yield, Await] :
  PropertyDefinition[?Yield, ?Await]
  PropertyDefinitionList[?Yield, ?Await] , *PropertyDefinition*[?Yield, ?Await]

PropertyDefinition[Yield, Await] :
  IdentifierReference[?Yield, ?Await]
  CoverInitializedName[?Yield, ?Await]
  PropertyName[?Yield, ?Await] : *AssignmentExpression*[+In, ?Yield, ?Await]
  MethodDefinition[?Yield, ?Await]
  ... *AssignmentExpression*[+In, ?Yield, ?Await]

PropertyName[Yield, Await] :
  LiteralPropertyName
  ComputedPropertyName[?Yield, ?Await]

LiteralPropertyName :
  IdentifierName

StringLiteral
NumericLiteral

ComputedPropertyName[Yield, Await] :
[*AssignmentExpression*[+In, ?Yield, ?Await]]

CoverInitializedName[Yield, Await] :
IdentifierReference[?Yield, ?Await] *Initializer*[+In, ?Yield, ?Await]

Initializer[In, Yield, Await] :
= *AssignmentExpression*[?In, ?Yield, ?Await]

TemplateLiteral[Yield, Await, Tagged] :
NoSubstitutionTemplate
SubstitutionTemplate[?Yield, ?Await, ?Tagged]

SubstitutionTemplate[Yield, Await, Tagged] :
TemplateHead *Expression*[+In, ?Yield, ?Await] *TemplateSpans*[?Yield, ?Await, ?Tagged]

TemplateSpans[Yield, Await, Tagged] :
TemplateTail
TemplateMiddleList[?Yield, ?Await, ?Tagged] *TemplateTail*

TemplateMiddleList[Yield, Await, Tagged] :
TemplateMiddle *Expression*[+In, ?Yield, ?Await]
TemplateMiddleList[?Yield, ?Await, ?Tagged] *TemplateMiddle* *Expression*[+In, ?Yield, ?Await]

MemberExpression[Yield, Await] :
PrimaryExpression[?Yield, ?Await]
MemberExpression[?Yield, ?Await] [*Expression*[+In, ?Yield, ?Await]]
MemberExpression[?Yield, ?Await] . *IdentifierName*
MemberExpression[?Yield, ?Await] *TemplateLiteral*[?Yield, ?Await, +Tagged]
SuperProperty[?Yield, ?Await]
MetaProperty
new *MemberExpression*[?Yield, ?Await] *Arguments*[?Yield, ?Await]

SuperProperty[Yield, Await] :
super [*Expression*[+In, ?Yield, ?Await]]
super . *IdentifierName*

MetaProperty :
NewTarget
ImportMeta

NewTarget :
new . target

ImportMeta :
import . meta

NewExpression[Yield, Await] :
MemberExpression[?Yield, ?Await]
new *NewExpression*[?Yield, ?Await]

CallExpression[Yield, Await] :
CoverCallExpressionAndAsyncArrowHead[?Yield, ?Await]
SuperCall[?Yield, ?Await]
ImportCall[?Yield, ?Await]

CallExpression[?Yield, ?Await] *Arguments*[?Yield, ?Await]
CallExpression[?Yield, ?Await] **[** *Expression*[+In, ?Yield, ?Await] **]**
CallExpression[?Yield, ?Await] **.** *IdentifierName*
CallExpression[?Yield, ?Await] *TemplateLiteral*[?Yield, ?Await, +Tagged]

When processing an instance of the production *CallExpression*[Yield, Await] **:** *CoverCallExpressionAndAsyncArrowHead*[?Yield, ?Await] the interpretation of *CoverCallExpressionAndAsyncArrowHead* is refined using the following grammar:

CallMemberExpression[Yield, Await] **:**
MemberExpression[?Yield, ?Await] *Arguments*[?Yield, ?Await]

SuperCall[Yield, Await] **:**
super *Arguments*[?Yield, ?Await]
ImportCall[Yield, Await] **:**
import **(** *AssignmentExpression*[+In, ?Yield, ?Await] **)**
Arguments[Yield, Await] **:**
( )
(*ArgumentList*[?Yield, ?Await] **)**
(*ArgumentList*[?Yield, ?Await] **,)**
ArgumentList[Yield, Await] **:**
AssignmentExpression[+In, ?Yield, ?Await]
... *AssignmentExpression*[+In, ?Yield, ?Await]
ArgumentList[?Yield, ?Await] **,** *AssignmentExpression*[+In, ?Yield, ?Await]
ArgumentList[?Yield, ?Await] **, ...** *AssignmentExpression*[+In, ?Yield, ?Await]
OptionalExpression[Yield, Await] **:**
MemberExpression[?Yield, ?Await] *OptionalChain*[?Yield, ?Await]
CallExpression[?Yield, ?Await] *OptionalChain*[?Yield, ?Await]
OptionalExpression[?Yield, ?Await] *OptionalChain*[?Yield, ?Await]
OptionalChain[Yield, Await] **:**
?. *Arguments*[?Yield, ?Await]
?. [*Expression*[+In, ?Yield, ?Await] **]**
?. *IdentifierName*
?. *TemplateLiteral*[?Yield, ?Await, +Tagged]
OptionalChain[?Yield, ?Await] *Arguments*[?Yield, ?Await]
OptionalChain[?Yield, ?Await] **[** *Expression*[+In, ?Yield, ?Await] **]**
OptionalChain[?Yield, ?Await] **.** *IdentifierName*
OptionalChain[?Yield, ?Await] *TemplateLiteral*[?Yield, ?Await, +Tagged]
LeftHandSideExpression[Yield, Await] **:**
NewExpression[?Yield, ?Await]
CallExpression[?Yield, ?Await]
OptionalExpression[?Yield, ?Await]
UpdateExpression[Yield, Await] **:**

LeftHandSideExpression[?Yield, ?Await]
LeftHandSideExpression[?Yield, ?Await] [no *LineTerminator* here] **++**
LeftHandSideExpression[?Yield, ?Await] [no *LineTerminator* here] **--**
++ *UnaryExpression*[?Yield, ?Await]
-- *UnaryExpression*[?Yield, ?Await]

UnaryExpression[Yield, Await] **:**
UpdateExpression[?Yield, ?Await]
delete *UnaryExpression*[?Yield, ?Await]
void *UnaryExpression*[?Yield, ?Await]
typeof *UnaryExpression*[?Yield, ?Await]
+ *UnaryExpression*[?Yield, ?Await]
- *UnaryExpression*[?Yield, ?Await]
~ *UnaryExpression*[?Yield, ?Await]
! *UnaryExpression*[?Yield, ?Await]
[+Await] *AwaitExpression*[?Yield]

ExponentiationExpression[Yield, Await] **:**
UnaryExpression[?Yield, ?Await]
UpdateExpression[?Yield, ?Await] ****** *ExponentiationExpression*[?Yield, ?Await]

MultiplicativeExpression[Yield, Await] **:**
ExponentiationExpression[?Yield, ?Await]
MultiplicativeExpression[?Yield, ?Await] *MultiplicativeOperator* *ExponentiationExpression*[?Yield, ?Await]

MultiplicativeOperator **: one of**
*** / %**

AdditiveExpression[Yield, Await] **:**
MultiplicativeExpression[?Yield, ?Await]
AdditiveExpression[?Yield, ?Await] **+** *MultiplicativeExpression*[?Yield, ?Await]
AdditiveExpression[?Yield, ?Await] **-** *MultiplicativeExpression*[?Yield, ?Await]

ShiftExpression[Yield, Await] **:**
AdditiveExpression[?Yield, ?Await]
ShiftExpression[?Yield, ?Await] **<<** *AdditiveExpression*[?Yield, ?Await]
ShiftExpression[?Yield, ?Await] **>>** *AdditiveExpression*[?Yield, ?Await]
ShiftExpression[?Yield, ?Await] **>>>** *AdditiveExpression*[?Yield, ?Await]

RelationalExpression[In, Yield, Await] **:**
ShiftExpression[?Yield, ?Await]
RelationalExpression[?In, ?Yield, ?Await] **<** *ShiftExpression*[?Yield, ?Await]
RelationalExpression[?In, ?Yield, ?Await] **>** *ShiftExpression*[?Yield, ?Await]
RelationalExpression[?In, ?Yield, ?Await] **<=** *ShiftExpression*[?Yield, ?Await]
RelationalExpression[?In, ?Yield, ?Await] **>=** *ShiftExpression*[?Yield, ?Await]
RelationalExpression[?In, ?Yield, ?Await] **instanceof** *ShiftExpression*[?Yield, ?Await]
[+In] *RelationalExpression*[+In, ?Yield, ?Await] **in** *ShiftExpression*[?Yield, ?Await]

EqualityExpression[In, Yield, Await] **:**
RelationalExpression[?In, ?Yield, ?Await]
EqualityExpression[?In, ?Yield, ?Await] **==** *RelationalExpression*[?In, ?Yield, ?Await]

EqualityExpression[?In, ?Yield, ?Await] `!=` *RelationalExpression*[?In, ?Yield, ?Await]
EqualityExpression[?In, ?Yield, ?Await] `===` *RelationalExpression*[?In, ?Yield, ?Await]
EqualityExpression[?In, ?Yield, ?Await] `!==` *RelationalExpression*[?In, ?Yield, ?Await]

BitwiseANDExpression[In, Yield, Await] :
EqualityExpression[?In, ?Yield, ?Await]
BitwiseANDExpression[?In, ?Yield, ?Await] `&` *EqualityExpression*[?In, ?Yield, ?Await]

BitwiseXORExpression[In, Yield, Await] :
BitwiseANDExpression[?In, ?Yield, ?Await]
BitwiseXORExpression[?In, ?Yield, ?Await] `^` *BitwiseANDExpression*[?In, ?Yield, ?Await]

BitwiseORExpression[In, Yield, Await] :
BitwiseXORExpression[?In, ?Yield, ?Await]
BitwiseORExpression[?In, ?Yield, ?Await] `|` *BitwiseXORExpression*[?In, ?Yield, ?Await]

LogicalANDExpression[In, Yield, Await] :
BitwiseORExpression[?In, ?Yield, ?Await]
LogicalANDExpression[?In, ?Yield, ?Await] `&&` *BitwiseORExpression*[?In, ?Yield, ?Await]

LogicalORExpression[In, Yield, Await] :
LogicalANDExpression[?In, ?Yield, ?Await]
LogicalORExpression[?In, ?Yield, ?Await] `||` *LogicalANDExpression*[?In, ?Yield, ?Await]

CoalesceExpression[In, Yield, Await] :
CoalesceExpressionHead[?In, ?Yield, ?Await] `??` *BitwiseORExpression*[?In, ?Yield, ?Await]

CoalesceExpressionHead[In, Yield, Await] :
CoalesceExpression[?In, ?Yield, ?Await]
BitwiseORExpression[?In, ?Yield, ?Await]

ShortCircuitExpression[In, Yield, Await] :
LogicalORExpression[?In, ?Yield, ?Await]
CoalesceExpression[?In, ?Yield, ?Await]

ConditionalExpression[In, Yield, Await] :
ShortCircuitExpression[?In, ?Yield, ?Await]
ShortCircuitExpression[?In, ?Yield, ?Await] `?` *AssignmentExpression*[+In, ?Yield, ?Await] `:`
AssignmentExpression[?In, ?Yield, ?Await]

AssignmentExpression[In, Yield, Await] :
ConditionalExpression[?In, ?Yield, ?Await]
[+Yield] *YieldExpression*[?In, ?Await]
ArrowFunction[?In, ?Yield, ?Await]
AsyncArrowFunction[?In, ?Yield, ?Await]
LeftHandSideExpression[?Yield, ?Await] `=` *AssignmentExpression*[?In, ?Yield, ?Await]
LeftHandSideExpression[?Yield, ?Await] *AssignmentOperator* *AssignmentExpression*[?In, ?Yield, ?Await]

AssignmentOperator : **one of**
`*= /= %= += -= <<= >>= >>>= &= ^= |= **=`

In certain circumstances when processing an instance of the production *AssignmentExpression*[In, Yield, Await] : *LeftHandSideExpression*[?Yield, ?Await] `=` *AssignmentExpression*[?In, ?Yield, ?Await] the following grammar is used to refine the interpretation of *LeftHandSideExpression*:

AssignmentPattern[Yield, Await] :

ObjectAssignmentPattern[?Yield, ?Await]

ArrayAssignmentPattern[?Yield, ?Await]

ObjectAssignmentPattern[Yield, Await] :

{ }

{ *AssignmentRestProperty*[?Yield, ?Await] }

{ *AssignmentPropertyList*[?Yield, ?Await] }

{ *AssignmentPropertyList*[?Yield, ?Await] , *AssignmentRestProperty*[?Yield, ?Await] opt }

ArrayAssignmentPattern[Yield, Await] :

[*Elision*opt *AssignmentRestElement*[?Yield, ?Await] opt]

[*AssignmentElementList*[?Yield, ?Await]]

[*AssignmentElementList*[?Yield, ?Await] , *Elision*opt *AssignmentRestElement*[?Yield, ?Await] opt]

AssignmentRestProperty[Yield, Await] :

... *DestructuringAssignmentTarget*[?Yield, ?Await]

AssignmentPropertyList[Yield, Await] :

AssignmentProperty[?Yield, ?Await]

AssignmentPropertyList[?Yield, ?Await] , *AssignmentProperty*[?Yield, ?Await]

AssignmentElementList[Yield, Await] :

AssignmentElisionElement[?Yield, ?Await]

AssignmentElementList[?Yield, ?Await] , *AssignmentElisionElement*[?Yield, ?Await]

AssignmentElisionElement[Yield, Await] :

*Elision*opt *AssignmentElement*[?Yield, ?Await]

AssignmentProperty[Yield, Await] :

IdentifierReference[?Yield, ?Await] *Initializer*[+In, ?Yield, ?Await] opt

PropertyName[?Yield, ?Await] : *AssignmentElement*[?Yield, ?Await]

AssignmentElement[Yield, Await] :

DestructuringAssignmentTarget[?Yield, ?Await] *Initializer*[+In, ?Yield, ?Await] opt

AssignmentRestElement[Yield, Await] :

... *DestructuringAssignmentTarget*[?Yield, ?Await]

DestructuringAssignmentTarget[Yield, Await] :

LeftHandSideExpression[?Yield, ?Await]

Expression[In, Yield, Await] :

AssignmentExpression[?In, ?Yield, ?Await]

Expression[?In, ?Yield, ?Await] , *AssignmentExpression*[?In, ?Yield, ?Await]

A.3 Statements

Statement[Yield, Await, Return] :

BlockStatement[?Yield, ?Await, ?Return]

VariableStatement[?Yield, ?Await]

EmptyStatement

ExpressionStatement[?Yield, ?Await]
IfStatement[?Yield, ?Await, ?Return]
BreakableStatement[?Yield, ?Await, ?Return]
ContinueStatement[?Yield, ?Await]
BreakStatement[?Yield, ?Await]
[+Return] *ReturnStatement*[?Yield, ?Await]
WithStatement[?Yield, ?Await, ?Return]
LabelledStatement[?Yield, ?Await, ?Return]
ThrowStatement[?Yield, ?Await]
TryStatement[?Yield, ?Await, ?Return]
DebuggerStatement

Declaration[Yield, Await] :
HoistableDeclaration[?Yield, ?Await, ~Default]
ClassDeclaration[?Yield, ?Await, ~Default]
LexicalDeclaration[+In, ?Yield, ?Await]

HoistableDeclaration[Yield, Await, Default] :
FunctionDeclaration[?Yield, ?Await, ?Default]
GeneratorDeclaration[?Yield, ?Await, ?Default]
AsyncFunctionDeclaration[?Yield, ?Await, ?Default]
AsyncGeneratorDeclaration[?Yield, ?Await, ?Default]

BreakableStatement[Yield, Await, Return] :
IterationStatement[?Yield, ?Await, ?Return]
SwitchStatement[?Yield, ?Await, ?Return]

BlockStatement[Yield, Await, Return] :
Block[?Yield, ?Await, ?Return]

Block[Yield, Await, Return] :
{ *StatementList*[?Yield, ?Await, ?Return] opt **}**

StatementList[Yield, Await, Return] :
StatementListItem[?Yield, ?Await, ?Return]
StatementList[?Yield, ?Await, ?Return] *StatementListItem*[?Yield, ?Await, ?Return]

StatementListItem[Yield, Await, Return] :
Statement[?Yield, ?Await, ?Return]
Declaration[?Yield, ?Await]

LexicalDeclaration[In, Yield, Await] :
LetOrConst *BindingList*[?In, ?Yield, ?Await] **;**

LetOrConst :
let
const

BindingList[In, Yield, Await] :
LexicalBinding[?In, ?Yield, ?Await]
BindingList[?In, ?Yield, ?Await] **,** *LexicalBinding*[?In, ?Yield, ?Await]

LexicalBinding[In, Yield, Await] :
BindingIdentifier[?Yield, ?Await] *Initializer*[?In, ?Yield, ?Await] opt
BindingPattern[?Yield, ?Await] *Initializer*[?In, ?Yield, ?Await]

VariableStatement[Yield, Await] :

var *VariableDeclarationList*[+In, ?Yield, ?Await] ;

VariableDeclarationList[In, Yield, Await] :

VariableDeclaration[?In, ?Yield, ?Await]

VariableDeclarationList[?In, ?Yield, ?Await] , *VariableDeclaration*[?In, ?Yield, ?Await]

VariableDeclaration[In, Yield, Await] :

BindingIdentifier[?Yield, ?Await] *Initializer*[?In, ?Yield, ?Await] opt

BindingPattern[?Yield, ?Await] *Initializer*[?In, ?Yield, ?Await]

BindingPattern[Yield, Await] :

ObjectBindingPattern[?Yield, ?Await]

ArrayBindingPattern[?Yield, ?Await]

ObjectBindingPattern[Yield, Await] :

{ }

{ *BindingRestProperty*[?Yield, ?Await] }

{ *BindingPropertyList*[?Yield, ?Await] }

{ *BindingPropertyList*[?Yield, ?Await] , *BindingRestProperty*[?Yield, ?Await] opt }

ArrayBindingPattern[Yield, Await] :

[*Elision*opt *BindingRestElement*[?Yield, ?Await] opt]

[*BindingElementList*[?Yield, ?Await]]

[*BindingElementList*[?Yield, ?Await] , *Elision*opt *BindingRestElement*[?Yield, ?Await] opt]

BindingRestProperty[Yield, Await] :

... *BindingIdentifier*[?Yield, ?Await]

BindingPropertyList[Yield, Await] :

BindingProperty[?Yield, ?Await]

BindingPropertyList[?Yield, ?Await] , *BindingProperty*[?Yield, ?Await]

BindingElementList[Yield, Await] :

BindingElisionElement[?Yield, ?Await]

BindingElementList[?Yield, ?Await] , *BindingElisionElement*[?Yield, ?Await]

BindingElisionElement[Yield, Await] :

*Elision*opt *BindingElement*[?Yield, ?Await]

BindingProperty[Yield, Await] :

SingleNameBinding[?Yield, ?Await]

PropertyName[?Yield, ?Await] : *BindingElement*[?Yield, ?Await]

BindingElement[Yield, Await] :

SingleNameBinding[?Yield, ?Await]

BindingPattern[?Yield, ?Await] *Initializer*[+In, ?Yield, ?Await] opt

SingleNameBinding[Yield, Await] :

BindingIdentifier[?Yield, ?Await] *Initializer*[+In, ?Yield, ?Await] opt

BindingRestElement[Yield, Await] :

... *BindingIdentifier*[?Yield, ?Await]

... *BindingPattern*[?Yield, ?Await]

EmptyStatement :

;

ExpressionStatement[Yield, Await] :

[lookahead ∉ { **{** , **function** , **async** [no *LineTerminator* here] **function** , **class** , **let** **[** }]

Expression[+In, ?Yield, ?Await] **;**

IfStatement[Yield, Await, Return] :

if **(** *Expression*[+In, ?Yield, ?Await] **)** *Statement*[?Yield, ?Await, ?Return] **else** *Statement*[?Yield, ?Await, ?Return]

if **(** *Expression*[+In, ?Yield, ?Await] **)** *Statement*[?Yield, ?Await, ?Return]

IterationStatement[Yield, Await, Return] :

do *Statement*[?Yield, ?Await, ?Return] **while** **(** *Expression*[+In, ?Yield, ?Await] **)** **;**

while **(** *Expression*[+In, ?Yield, ?Await] **)** *Statement*[?Yield, ?Await, ?Return]

for **(** [lookahead ≠ **let** **[**] *Expression*[~In, ?Yield, ?Await] opt **;** *Expression*[+In, ?Yield, ?Await] opt **;** *Expression*[+In, ?Yield, ?Await] opt **)** *Statement*[?Yield, ?Await, ?Return]

for **(** **var** *VariableDeclarationList*[~In, ?Yield, ?Await] **;** *Expression*[+In, ?Yield, ?Await] opt **;** *Expression*[+In, ?Yield, ?Await] opt **)** *Statement*[?Yield, ?Await, ?Return]

for **(** *LexicalDeclaration*[~In, ?Yield, ?Await] *Expression*[+In, ?Yield, ?Await] opt **;** *Expression*[+In, ?Yield, ?Await] opt **)** *Statement*[?Yield, ?Await, ?Return]

for **(** [lookahead ≠ **let** **[**] *LeftHandSideExpression*[?Yield, ?Await] **in** *Expression*[+In, ?Yield, ?Await] **)** *Statement*[?Yield, ?Await, ?Return]

for **(** **var** *ForBinding*[?Yield, ?Await] **in** *Expression*[+In, ?Yield, ?Await] **)** *Statement*[?Yield, ?Await, ?Return]

for **(** *ForDeclaration*[?Yield, ?Await] **in** *Expression*[+In, ?Yield, ?Await] **)** *Statement*[?Yield, ?Await, ?Return]

for **(** [lookahead ≠ **let**] *LeftHandSideExpression*[?Yield, ?Await] **of** *AssignmentExpression*[+In, ?Yield, ?Await] **)** *Statement*[?Yield, ?Await, ?Return]

for **(** **var** *ForBinding*[?Yield, ?Await] **of** *AssignmentExpression*[+In, ?Yield, ?Await] **)** *Statement*[?Yield, ?Await, ?Return]

for **(** *ForDeclaration*[?Yield, ?Await] **of** *AssignmentExpression*[+In, ?Yield, ?Await] **)** *Statement*[?Yield, ?Await, ?Return]

[+Await] **for** **await** **(** [lookahead ≠ **let**] *LeftHandSideExpression*[?Yield, ?Await] **of** *AssignmentExpression*[+In, ?Yield, ?Await] **)** *Statement*[?Yield, ?Await, ?Return]

[+Await] **for** **await** **(** **var** *ForBinding*[?Yield, ?Await] **of** *AssignmentExpression*[+In, ?Yield, ?Await] **)** *Statement*[?Yield, ?Await, ?Return]

[+Await] **for** **await** **(** *ForDeclaration*[?Yield, ?Await] **of** *AssignmentExpression*[+In, ?Yield, ?Await] **)** *Statement*[?Yield, ?Await, ?Return]

ForDeclaration[Yield, Await] :

LetOrConst *ForBinding*[?Yield, ?Await]

ForBinding[Yield, Await] :

BindingIdentifier[?Yield, ?Await]

BindingPattern[?Yield, ?Await]

ContinueStatement[Yield, Await] :

continue **;**

continue [no *LineTerminator* here] *LabelIdentifier*[?Yield, ?Await] **;**

BreakStatement[Yield, Await] :

break **;**

break [no *LineTerminator* here] *LabelIdentifier*[?Yield, ?Await] **;**

ReturnStatement[Yield, Await] :

return ;

return [no *LineTerminator* here] *Expression*[+In, ?Yield, ?Await] ;

WithStatement[Yield, Await, Return] :

with (*Expression*[+In, ?Yield, ?Await]) *Statement*[?Yield, ?Await, ?Return]

SwitchStatement[Yield, Await, Return] :

switch (*Expression*[+In, ?Yield, ?Await]) *CaseBlock*[?Yield, ?Await, ?Return]

CaseBlock[Yield, Await, Return] :

{ *CaseClauses*[?Yield, ?Await, ?Return] opt **}**

{ *CaseClauses*[?Yield, ?Await, ?Return] opt *DefaultClause*[?Yield, ?Await, ?Return]
CaseClauses[?Yield, ?Await, ?Return] opt **}**

CaseClauses[Yield, Await, Return] :

CaseClause[?Yield, ?Await, ?Return]

CaseClauses[?Yield, ?Await, ?Return] *CaseClause*[?Yield, ?Await, ?Return]

CaseClause[Yield, Await, Return] :

case *Expression*[+In, ?Yield, ?Await] **:** *StatementList*[?Yield, ?Await, ?Return] opt

DefaultClause[Yield, Await, Return] :

default : *StatementList*[?Yield, ?Await, ?Return] opt

LabelledStatement[Yield, Await, Return] :

LabelIdentifier[?Yield, ?Await] **:** *LabelledItem*[?Yield, ?Await, ?Return]

LabelledItem[Yield, Await, Return] :

Statement[?Yield, ?Await, ?Return]

FunctionDeclaration[?Yield, ?Await, ~Default]

ThrowStatement[Yield, Await] :

throw [no *LineTerminator* here] *Expression*[+In, ?Yield, ?Await] ;

TryStatement[Yield, Await, Return] :

try *Block*[?Yield, ?Await, ?Return] *Catch*[?Yield, ?Await, ?Return]

try *Block*[?Yield, ?Await, ?Return] *Finally*[?Yield, ?Await, ?Return]

try *Block*[?Yield, ?Await, ?Return] *Catch*[?Yield, ?Await, ?Return] *Finally*[?Yield, ?Await, ?Return]

Catch[Yield, Await, Return] :

catch (*CatchParameter*[?Yield, ?Await]) *Block*[?Yield, ?Await, ?Return]

catch *Block*[?Yield, ?Await, ?Return]

Finally[Yield, Await, Return] :

finally *Block*[?Yield, ?Await, ?Return]

CatchParameter[Yield, Await] :

BindingIdentifier[?Yield, ?Await]

BindingPattern[?Yield, ?Await]

DebuggerStatement :

debugger ;

A.4 Functions and Classes

FunctionDeclaration[Yield, Await, Default] :

function *BindingIdentifier*[?Yield, ?Await] (*FormalParameters*[~Yield, ~Await]) **{**

FunctionBody[~Yield, ~Await] }

[+Default] **function** (*FormalParameters*[~Yield, ~Await]) { *FunctionBody*[~Yield, ~Await] }

FunctionExpression :

function *BindingIdentifier*[~Yield, ~Await] opt (*FormalParameters*[~Yield, ~Await]) {

FunctionBody[~Yield, ~Await] }

UniqueFormalParameters[Yield, Await] :

FormalParameters[?Yield, ?Await]

FormalParameters[Yield, Await] :

[empty]

FunctionRestParameter[?Yield, ?Await]

FormalParameterList[?Yield, ?Await]

FormalParameterList[?Yield, ?Await] ,

FormalParameterList[?Yield, ?Await] , *FunctionRestParameter*[?Yield, ?Await]

FormalParameterList[Yield, Await] :

FormalParameter[?Yield, ?Await]

FormalParameterList[?Yield, ?Await] , *FormalParameter*[?Yield, ?Await]

FunctionRestParameter[Yield, Await] :

BindingRestElement[?Yield, ?Await]

FormalParameter[Yield, Await] :

BindingElement[?Yield, ?Await]

FunctionBody[Yield, Await] :

FunctionStatementList[?Yield, ?Await]

FunctionStatementList[Yield, Await] :

StatementList[?Yield, ?Await, +Return] opt

ArrowFunction[In, Yield, Await] :

ArrowParameters[?Yield, ?Await] [no *LineTerminator* here] => *ConciseBody*[?In]

ArrowParameters[Yield, Await] :

BindingIdentifier[?Yield, ?Await]

CoverParenthesizedExpressionAndArrowParameterList[?Yield, ?Await]

ConciseBody[In] :

[lookahead ≠ {] *ExpressionBody*[?In, ~Await]

{ *FunctionBody*[~Yield, ~Await] }

ExpressionBody[In, Await] :

AssignmentExpression[?In, ~Yield, ?Await]

When the production *ArrowParameters*[Yield, Await] : *CoverParenthesizedExpressionAndArrowParameterList*[?Yield, ?Await] is recognized the following grammar is used to refine the interpretation of *CoverParenthesizedExpressionAndArrowParameterList*:

ArrowFormalParameters[Yield, Await] :

(*UniqueFormalParameters*[?Yield, ?Await])

AsyncArrowFunction[In, Yield, Await] :

async [no *LineTerminator* here] *AsyncArrowBindingIdentifier*[?Yield] [no *LineTerminator* here] **=>** *AsyncConciseBody*[?In]

CoverCallExpressionAndAsyncArrowHead[?Yield, ?Await] [no *LineTerminator* here] **=>** *AsyncConciseBody*[?In]

AsyncConciseBody[In] **:**

[lookahead ≠ **{**] *ExpressionBody*[?In, +Await]

{ *AsyncFunctionBody* **}**

AsyncArrowBindingIdentifier[Yield] **:**

BindingIdentifier[?Yield, +Await]

CoverCallExpressionAndAsyncArrowHead **:** *MemberExpression* *Arguments*

When the production *AsyncArrowFunction*[In, Yield, Await] **:** *CoverCallExpressionAndAsyncArrowHead*[?Yield, ?Await] [no *LineTerminator* here] **=>** *AsyncConciseBody*[?In] is recognized the following grammar is used to refine the interpretation of *CoverCallExpressionAndAsyncArrowHead*:

AsyncArrowHead **:**

async [no *LineTerminator* here] *ArrowFormalParameters*[~Yield, +Await]

MethodDefinition[Yield, Await] **:**

PropertyName[?Yield, ?Await] **(** *UniqueFormalParameters*[~Yield, ~Await] **)** **{** *FunctionBody*[~Yield, ~Await] **}**

GeneratorMethod[?Yield, ?Await]

AsyncMethod[?Yield, ?Await]

AsyncGeneratorMethod[?Yield, ?Await]

get *PropertyName*[?Yield, ?Await] **( )** **{** *FunctionBody*[~Yield, ~Await] **}**

set *PropertyName*[?Yield, ?Await] **(** *PropertySetParameterList* **)** **{** *FunctionBody*[~Yield, ~Await] **}**

PropertySetParameterList **:**

FormalParameter[~Yield, ~Await]

GeneratorMethod[Yield, Await] **:**

***** *PropertyName*[?Yield, ?Await] **(** *UniqueFormalParameters*[+Yield, ~Await] **)** **{** *GeneratorBody* **}**

GeneratorDeclaration[Yield, Await, Default] **:**

function * *BindingIdentifier*[?Yield, ?Await] **(** *FormalParameters*[+Yield, ~Await] **)** **{** *GeneratorBody* **}**

[+Default] **function *** **(** *FormalParameters*[+Yield, ~Await] **)** **{** *GeneratorBody* **}**

GeneratorExpression **:**

function * *BindingIdentifier*[+Yield, ~Await] opt **(** *FormalParameters*[+Yield, ~Await] **)** **{** *GeneratorBody* **}**

GeneratorBody **:**

FunctionBody[+Yield, ~Await]

YieldExpression[In, Await] **:**

yield

yield [no *LineTerminator* here] *AssignmentExpression*[?In, +Yield, ?Await]

yield [no *LineTerminator* here] ***** *AssignmentExpression*[?In, +Yield, ?Await]

AsyncGeneratorMethod[Yield, Await] **:**

async [no *LineTerminator* here] ***** *PropertyName*[?Yield, ?Await] **(** *UniqueFormalParameters*[+Yield, +Await] **)** **{** *AsyncGeneratorBody* **}**

AsyncGeneratorDeclaration[Yield, Await, Default] **:**

async [no *LineTerminator* here] **function *** *BindingIdentifier*[?Yield, ?Await] **(**

FormalParameters[+Yield, +Await]) { *AsyncGeneratorBody* }

[+Default] **async** [no *LineTerminator* here] **function** * (*FormalParameters*[+Yield, +Await]) { *AsyncGeneratorBody* }

AsyncGeneratorExpression :

async [no *LineTerminator* here] **function** * *BindingIdentifier*[+Yield, +Await] opt (*FormalParameters*[+Yield, +Await]) { *AsyncGeneratorBody* }

AsyncGeneratorBody :

FunctionBody[+Yield, +Await]

AsyncFunctionDeclaration[Yield, Await, Default] :

async [no *LineTerminator* here] **function** *BindingIdentifier*[?Yield, ?Await] (*FormalParameters*[~Yield, +Await]) { *AsyncFunctionBody* }

[+Default] **async** [no *LineTerminator* here] **function** (*FormalParameters*[~Yield, +Await]) { *AsyncFunctionBody* }

AsyncFunctionExpression :

async [no *LineTerminator* here] **function** (*FormalParameters*[~Yield, +Await]) { *AsyncFunctionBody* }

async [no *LineTerminator* here] **function** *BindingIdentifier*[~Yield, +Await] (*FormalParameters*[~Yield, +Await]) { *AsyncFunctionBody* }

AsyncMethod[Yield, Await] :

async [no *LineTerminator* here] *PropertyName*[?Yield, ?Await] (*UniqueFormalParameters*[~Yield, +Await]) { *AsyncFunctionBody* }

AsyncFunctionBody :

FunctionBody[~Yield, +Await]

AwaitExpression[Yield] :

await *UnaryExpression*[?Yield, +Await]

ClassDeclaration[Yield, Await, Default] :

class *BindingIdentifier*[?Yield, ?Await] *ClassTail*[?Yield, ?Await]

[+Default] **class** *ClassTail*[?Yield, ?Await]

ClassExpression[Yield, Await] :

class *BindingIdentifier*[?Yield, ?Await] opt *ClassTail*[?Yield, ?Await]

ClassTail[Yield, Await] :

ClassHeritage[?Yield, ?Await] opt { *ClassBody*[?Yield, ?Await] opt }

ClassHeritage[Yield, Await] :

extends *LeftHandSideExpression*[?Yield, ?Await]

ClassBody[Yield, Await] :

ClassElementList[?Yield, ?Await]

ClassElementList[Yield, Await] :

ClassElement[?Yield, ?Await]

ClassElementList[?Yield, ?Await] *ClassElement*[?Yield, ?Await]

ClassElement[Yield, Await] :

MethodDefinition[?Yield, ?Await]

static *MethodDefinition*[?Yield, ?Await]

;

A.5 Scripts and Modules

Script :
    ScriptBody$_{\text{opt}}$
ScriptBody :
    StatementList$_{\text{[~Yield, ~Await, ~Return]}}$
Module :
    ModuleBody$_{\text{opt}}$
ModuleBody :
    ModuleItemList
ModuleItemList :
    ModuleItem
    ModuleItemList *ModuleItem*
ModuleItem :
    ImportDeclaration
    ExportDeclaration
    StatementListItem$_{\text{[~Yield, ~Await, ~Return]}}$
ImportDeclaration :
    import *ImportClause* *FromClause* **;**
    import *ModuleSpecifier* **;**
ImportClause :
    ImportedDefaultBinding
    NameSpaceImport
    NamedImports
    ImportedDefaultBinding **,** *NameSpaceImport*
    ImportedDefaultBinding **,** *NamedImports*
ImportedDefaultBinding :
    ImportedBinding
NameSpaceImport :
    *** as** *ImportedBinding*
NamedImports :
    { }
    { *ImportsList* **}**
    { *ImportsList* **, }**
FromClause :
    from *ModuleSpecifier*
ImportsList :
    ImportSpecifier
    ImportsList **,** *ImportSpecifier*
ImportSpecifier :
    ImportedBinding
    IdentifierName **as** *ImportedBinding*
ModuleSpecifier :
    StringLiteral
ImportedBinding :
    BindingIdentifier$_{\text{[~Yield, ~Await]}}$
ExportDeclaration :
    export *ExportFromClause* *FromClause* **;**
    export *NamedExports* **;**

export *VariableStatement*[~Yield, ~Await]

export *Declaration*[~Yield, ~Await]

export default *HoistableDeclaration*[~Yield, ~Await, +Default]

export default *ClassDeclaration*[~Yield, ~Await, +Default]

export default [lookahead ∉ { function , async [no *LineTerminator* here] function , class }]
AssignmentExpression[+In, ~Yield, ~Await] ;

ExportFromClause :

*

* as *IdentifierName*

NamedExports

NamedExports :

{ }

{ *ExportsList* }

{ *ExportsList* , }

ExportsList :

ExportSpecifier

ExportsList , *ExportSpecifier*

ExportSpecifier :

IdentifierName

IdentifierName as *IdentifierName*

A.6 Number Conversions

StringNumericLiteral :::

StrWhiteSpace$_{opt}$

StrWhiteSpace$_{opt}$ *StrNumericLiteral* *StrWhiteSpace*$_{opt}$

StrWhiteSpace :::

StrWhiteSpaceChar *StrWhiteSpace*$_{opt}$

StrWhiteSpaceChar :::

WhiteSpace

LineTerminator

StrNumericLiteral :::

StrDecimalLiteral

NonDecimalIntegerLiteral

StrDecimalLiteral :::

StrUnsignedDecimalLiteral

+ *StrUnsignedDecimalLiteral*

- *StrUnsignedDecimalLiteral*

StrUnsignedDecimalLiteral :::

Infinity

DecimalDigits . *DecimalDigits*$_{opt}$ *ExponentPart*$_{opt}$

. *DecimalDigits* *ExponentPart*$_{opt}$

DecimalDigits *ExponentPart*$_{opt}$

All grammar symbols not explicitly defined by the *StringNumericLiteral* grammar have the definitions used in the Lexical Grammar for numeric literals.

A.7 Universal Resource Identifier Character Classes

uri :::
    uriCharacters$_{opt}$

uriCharacters :::
    uriCharacter *uriCharacters*$_{opt}$

uriCharacter :::
    uriReserved
    uriUnescaped
    uriEscaped

uriReserved ::: **one of**
    `; / ? : @ & = + $ ,`

uriUnescaped :::
    uriAlpha
    DecimalDigit
    uriMark

uriEscaped :::
    `%` *HexDigit* *HexDigit*

uriAlpha ::: **one of**
    `a b c d e f g h i j k l m n o p q r s t u v w x y z A B C D E F G H I J K L M N O P Q R S T U V W X Y Z`

uriMark ::: **one of**
    `- _ . ! ~ * ' ( )`

A.8 Regular Expressions

Pattern$_{[U,\ N]}$ ::
    Disjunction$_{[?U,\ ?N]}$

Disjunction$_{[U,\ N]}$ ::
    Alternative$_{[?U,\ ?N]}$
    Alternative$_{[?U,\ ?N]}$ `|` *Disjunction*$_{[?U,\ ?N]}$

Alternative$_{[U,\ N]}$ ::
    [empty]
    Alternative$_{[?U,\ ?N]}$ *Term*$_{[?U,\ ?N]}$

Term$_{[U,\ N]}$ ::
    Assertion$_{[?U,\ ?N]}$
    Atom$_{[?U,\ ?N]}$
    Atom$_{[?U,\ ?N]}$ *Quantifier*

Assertion$_{[U,\ N]}$ ::
    `^`
    `$`
    `\ b`
    `\ B`
    `( ? =` *Disjunction*$_{[?U,\ ?N]}$ `)`
    `( ? !` *Disjunction*$_{[?U,\ ?N]}$ `)`
    `( ? <=` *Disjunction*$_{[?U,\ ?N]}$ `)`
    `( ? <!` *Disjunction*$_{[?U,\ ?N]}$ `)`

Quantifier ::

QuantifierPrefix

QuantifierPrefix **?**

QuantifierPrefix **::**

*****

+

?

{ *DecimalDigits* **}**

{ *DecimalDigits* **, }**

{ *DecimalDigits* **,** *DecimalDigits* **}**

Atom[U, N] **::**

PatternCharacter

.

**** *AtomEscape*[?U, ?N]

CharacterClass[?U]

(*GroupSpecifier*[?U] *Disjunction*[?U, ?N] **)**

(? : *Disjunction*[?U, ?N] **)**

SyntaxCharacter **::** **one of**

^ $ \ . * + ? ( ) [ ] { } |

PatternCharacter **::**

SourceCharacter but not *SyntaxCharacter*

AtomEscape[U, N] **::**

DecimalEscape

CharacterClassEscape[?U]

CharacterEscape[?U]

[+N] **k** *GroupName*[?U]

CharacterEscape[U] **::**

ControlEscape

c *ControlLetter*

0 [lookahead ∉ *DecimalDigit*]

HexEscapeSequence

RegExpUnicodeEscapeSequence[?U]

IdentityEscape[?U]

ControlEscape **::** **one of**

f n r t v

ControlLetter **::** **one of**

a b c d e f g h i j k l m n o p q r s t u v w x y z A B C D E F G H I J K L M N O P Q R S T U V W X Y Z

GroupSpecifier[U] **::**

[empty]

? *GroupName*[?U]

GroupName[U] **::**

< *RegExpIdentifierName*[?U] **>**

RegExpIdentifierName[U] **::**

RegExpIdentifierStart[?U]

RegExpIdentifierName[?U] *RegExpIdentifierPart*[?U]

RegExpIdentifierStart[U] **::**

UnicodeIDStart

$

_

**** *RegExpUnicodeEscapeSequence*[+U]

[~U] *UnicodeLeadSurrogate* *UnicodeTrailSurrogate*

RegExpIdentifierPart[U] **::**

UnicodeIDContinue

$

**** *RegExpUnicodeEscapeSequence*[+U]

[~U] *UnicodeLeadSurrogate* *UnicodeTrailSurrogate*

<ZWNJ>

<ZWJ>

RegExpUnicodeEscapeSequence[U] **::**

[+U] **u** *LeadSurrogate* **\u** *TrailSurrogate*

[+U] **u** *LeadSurrogate*

[+U] **u** *TrailSurrogate*

[+U] **u** *NonSurrogate*

[~U] **u** *Hex4Digits*

[+U] **u{** *CodePoint* **}**

Each **\u** *TrailSurrogate* for which the choice of associated **u** *LeadSurrogate* is ambiguous shall be associated with the nearest possible **u** *LeadSurrogate* that would otherwise have no corresponding **\u** *TrailSurrogate*.

LeadSurrogate **::**

Hex4Digits but only if the SV of *Hex4Digits* is in the inclusive range 0xD800 to 0xDBFF

TrailSurrogate **::**

Hex4Digits but only if the SV of *Hex4Digits* is in the inclusive range 0xDC00 to 0xDFFF

NonSurrogate **::**

Hex4Digits but only if the SV of *Hex4Digits* is not in the inclusive range 0xD800 to 0xDFFF

IdentityEscape[U] **::**

[+U] *SyntaxCharacter*

[+U] **/**

[~U] *SourceCharacter* but not *UnicodeIDContinue*

DecimalEscape **::**

NonZeroDigit *DecimalDigits*$_{opt}$ [lookahead ∉ *DecimalDigit*]

CharacterClassEscape[U] **::**

d

D

s

S

w

W

[+U] **p{** *UnicodePropertyValueExpression* **}**

[+U] **P{** *UnicodePropertyValueExpression* **}**

UnicodePropertyValueExpression **::**

UnicodePropertyName **=** *UnicodePropertyValue*

LoneUnicodePropertyNameOrValue

UnicodePropertyName ::
    UnicodePropertyNameCharacters
UnicodePropertyNameCharacters ::
    UnicodePropertyNameCharacter *UnicodePropertyNameCharacters*$_{opt}$
UnicodePropertyValue ::
    UnicodePropertyValueCharacters
LoneUnicodePropertyNameOrValue ::
    UnicodePropertyValueCharacters
UnicodePropertyValueCharacters ::
    UnicodePropertyValueCharacter *UnicodePropertyValueCharacters*$_{opt}$
UnicodePropertyValueCharacter ::
    UnicodePropertyNameCharacter
    DecimalDigit
UnicodePropertyNameCharacter ::
    ControlLetter
    _
CharacterClass$_{[U]}$ ::
    [[lookahead ≠ ^] *ClassRanges*$_{[?U]}$]
    [^ *ClassRanges*$_{[?U]}$]
ClassRanges$_{[U]}$ ::
    [empty]
    NonemptyClassRanges$_{[?U]}$
NonemptyClassRanges$_{[U]}$ ::
    ClassAtom$_{[?U]}$
    ClassAtom$_{[?U]}$ *NonemptyClassRangesNoDash*$_{[?U]}$
    ClassAtom$_{[?U]}$ - *ClassAtom*$_{[?U]}$ *ClassRanges*$_{[?U]}$
NonemptyClassRangesNoDash$_{[U]}$ ::
    ClassAtom$_{[?U]}$
    ClassAtomNoDash$_{[?U]}$ *NonemptyClassRangesNoDash*$_{[?U]}$
    ClassAtomNoDash$_{[?U]}$ - *ClassAtom*$_{[?U]}$ *ClassRanges*$_{[?U]}$
ClassAtom$_{[U]}$ ::
    -
    ClassAtomNoDash$_{[?U]}$
ClassAtomNoDash$_{[U]}$ ::
    SourceCharacter but not one of \ or] or -
    \ *ClassEscape*$_{[?U]}$
ClassEscape$_{[U]}$ ::
    b
    [+U] -
    CharacterClassEscape$_{[?U]}$
    CharacterEscape$_{[?U]}$

B Additional ECMAScript Features for Web Browsers

The ECMAScript language syntax and semantics defined in this annex are required when the ECMAScript host is a web browser. The content of this annex is normative but optional if the ECMAScript host is not a web browser.

NOTE This annex describes various legacy features and other characteristics of web browser based ECMAScript implementations. All of the language features and behaviours specified in this annex have one or more undesirable characteristics and in the absence of legacy usage would be removed from this specification. However, the usage of these features by large numbers of existing web pages means that web browsers must continue to support them. The specifications in this annex define the requirements for interoperable implementations of these legacy features.

These features are not considered part of the core ECMAScript language. Programmers should not use or assume the existence of these features and behaviours when writing new ECMAScript code. ECMAScript implementations are discouraged from implementing these features unless the implementation is part of a web browser or is required to run the same legacy ECMAScript code that web browsers encounter.

B.1 Additional Syntax

B.1.1 Numeric Literals

The syntax and semantics of 11.8.3 is extended as follows except that this extension is not allowed for strict mode code:

Syntax

NumericLiteral **::**
- *DecimalLiteral*
- *DecimalBigIntegerLiteral*
- *NonDecimalIntegerLiteral*
- *NonDecimalIntegerLiteral* *BigIntLiteralSuffix*
- *LegacyOctalIntegerLiteral*

LegacyOctalIntegerLiteral **::**
- **0** *OctalDigit*
- *LegacyOctalIntegerLiteral* *OctalDigit*

DecimalIntegerLiteral **::**
- **0**
- *NonZeroDigit* *DecimalDigits*$_{opt}$
- *NonOctalDecimalIntegerLiteral*

NonOctalDecimalIntegerLiteral **::**
- **0** *NonOctalDigit*
- *LegacyOctalLikeDecimalIntegerLiteral* *NonOctalDigit*
- *NonOctalDecimalIntegerLiteral* *DecimalDigit*

LegacyOctalLikeDecimalIntegerLiteral **::**
- **0** *OctalDigit*

LegacyOctalLikeDecimalIntegerLiteral *OctalDigit*

NonOctalDigit **::** **one of**

`8` `9`

B.1.1.1 Static Semantics

- The MV of *LegacyOctalIntegerLiteral* **::** `0` *OctalDigit* is the MV of *OctalDigit*.
- The MV of *LegacyOctalIntegerLiteral* **::** *LegacyOctalIntegerLiteral* *OctalDigit* is (the MV of *LegacyOctalIntegerLiteral* times 8) plus the MV of *OctalDigit*.
- The MV of *DecimalIntegerLiteral* **::** *NonOctalDecimalIntegerLiteral* is the MV of *NonOctalDecimalIntegerLiteral*.
- The MV of *NonOctalDecimalIntegerLiteral* **::** `0` *NonOctalDigit* is the MV of *NonOctalDigit*.
- The MV of *NonOctalDecimalIntegerLiteral* **::** *LegacyOctalLikeDecimalIntegerLiteral* *NonOctalDigit* is (the MV of *LegacyOctalLikeDecimalIntegerLiteral* times 10) plus the MV of *NonOctalDigit*.
- The MV of *NonOctalDecimalIntegerLiteral* **::** *NonOctalDecimalIntegerLiteral* *DecimalDigit* is (the MV of *NonOctalDecimalIntegerLiteral* times 10) plus the MV of *DecimalDigit*.
- The MV of *LegacyOctalLikeDecimalIntegerLiteral* **::** `0` *OctalDigit* is the MV of *OctalDigit*.
- The MV of *LegacyOctalLikeDecimalIntegerLiteral* **::** *LegacyOctalLikeDecimalIntegerLiteral* *OctalDigit* is (the MV of *LegacyOctalLikeDecimalIntegerLiteral* times 10) plus the MV of *OctalDigit*.
- The MV of *NonOctalDigit* **::** `8` is 8.
- The MV of *NonOctalDigit* **::** `9` is 9.

B.1.2 String Literals

The syntax and semantics of 11.8.4 is extended as follows except that this extension is not allowed for strict mode code:

Syntax

EscapeSequence **::**
CharacterEscapeSequence
LegacyOctalEscapeSequence
HexEscapeSequence
UnicodeEscapeSequence

LegacyOctalEscapeSequence **::**
OctalDigit [lookahead ∉ *OctalDigit*]
ZeroToThree *OctalDigit* [lookahead ∉ *OctalDigit*]
FourToSeven *OctalDigit*
ZeroToThree *OctalDigit* *OctalDigit*

ZeroToThree **::** **one of**

`0` `1` `2` `3`

FourToSeven **::** **one of**

`4` `5` `6` `7`

This definition of *EscapeSequence* is not used in strict mode or when parsing *TemplateCharacter*.

B.1.2.1 Static Semantics

- The SV of *EscapeSequence* :: *LegacyOctalEscapeSequence* is the SV of *LegacyOctalEscapeSequence*.
- The SV of *LegacyOctalEscapeSequence* :: *OctalDigit* is the code unit whose value is the MV of *OctalDigit*.
- The SV of *LegacyOctalEscapeSequence* :: *ZeroToThree* *OctalDigit* is the code unit whose value is (8 times the MV of *ZeroToThree*) plus the MV of *OctalDigit*.
- The SV of *LegacyOctalEscapeSequence* :: *FourToSeven* *OctalDigit* is the code unit whose value is (8 times the MV of *FourToSeven*) plus the MV of *OctalDigit*.
- The SV of *LegacyOctalEscapeSequence* :: *ZeroToThree* *OctalDigit* *OctalDigit* is the code unit whose value is (64 (that is, 8^2) times the MV of *ZeroToThree*) plus (8 times the MV of the first *OctalDigit*) plus the MV of the second *OctalDigit*.
- The MV of *ZeroToThree* :: `0` is 0.
- The MV of *ZeroToThree* :: `1` is 1.
- The MV of *ZeroToThree* :: `2` is 2.
- The MV of *ZeroToThree* :: `3` is 3.
- The MV of *FourToSeven* :: `4` is 4.
- The MV of *FourToSeven* :: `5` is 5.
- The MV of *FourToSeven* :: `6` is 6.
- The MV of *FourToSeven* :: `7` is 7.

B.1.3 HTML-like Comments

The syntax and semantics of 11.4 is extended as follows except that this extension is not allowed when parsing source code using the goal symbol *Module*:

Syntax

Comment ::
  MultiLineComment
  SingleLineComment
  SingleLineHTMLOpenComment
  SingleLineHTMLCloseComment
  SingleLineDelimitedComment

MultiLineComment ::
  `/*` *FirstCommentLine*$_{opt}$ *LineTerminator* *MultiLineCommentChars*$_{opt}$ `*/` *HTMLCloseComment*$_{opt}$

FirstCommentLine ::
  SingleLineDelimitedCommentChars

SingleLineHTMLOpenComment ::
  `<!--` *SingleLineCommentChars*$_{opt}$

SingleLineHTMLCloseComment ::
  LineTerminatorSequence *HTMLCloseComment*

SingleLineDelimitedComment ::
  `/*` *SingleLineDelimitedCommentChars*$_{opt}$ `*/`

HTMLCloseComment ::
  WhiteSpaceSequence$_{opt}$ *SingleLineDelimitedCommentSequence*$_{opt}$ `-->` *SingleLineCommentChars*$_{opt}$

SingleLineDelimitedCommentChars ::
SingleLineNotAsteriskChar *SingleLineDelimitedCommentChars*$_{opt}$
`*` *SingleLinePostAsteriskCommentChars*$_{opt}$

SingleLineNotAsteriskChar ::
SourceCharacter but not one of `*` or *LineTerminator*

SingleLinePostAsteriskCommentChars ::
SingleLineNotForwardSlashOrAsteriskChar *SingleLineDelimitedCommentChars*$_{opt}$
`*` *SingleLinePostAsteriskCommentChars*$_{opt}$

SingleLineNotForwardSlashOrAsteriskChar ::
SourceCharacter but not one of `/` or `*` or *LineTerminator*

WhiteSpaceSequence ::
WhiteSpace *WhiteSpaceSequence*$_{opt}$

SingleLineDelimitedCommentSequence ::
SingleLineDelimitedComment *WhiteSpaceSequence*$_{opt}$ *SingleLineDelimitedCommentSequence*$_{opt}$

Similar to a *MultiLineComment* that contains a line terminator code point, a *SingleLineHTMLCloseComment* is considered to be a *LineTerminator* for purposes of parsing by the syntactic grammar.

B.1.4 Regular Expressions Patterns

The syntax of 21.2.1 is modified and extended as follows. These changes introduce ambiguities that are broken by the ordering of grammar productions and by contextual information. When parsing using the following grammar, each alternative is considered only if previous production alternatives do not match.

This alternative pattern grammar and semantics only changes the syntax and semantics of BMP patterns. The following grammar extensions include productions parameterized with the [U] parameter. However, none of these extensions change the syntax of Unicode patterns recognized when parsing with the [U] parameter present on the goal symbol.

Syntax

Term$_{[U, N]}$ ::
[+U] *Assertion*$_{[+U, ?N]}$
[+U] *Atom*$_{[+U, ?N]}$
[+U] *Atom*$_{[+U, ?N]}$ *Quantifier*
[~U] *QuantifiableAssertion*$_{[?N]}$ *Quantifier*
[~U] *Assertion*$_{[~U, ?N]}$
[~U] *ExtendedAtom*$_{[?N]}$ *Quantifier*
[~U] *ExtendedAtom*$_{[?N]}$

Assertion$_{[U, N]}$ ::
`^`
`$`
`\ b`

\ B

[+U] (? = *Disjunction*[+U, ?N])

[+U] (? ! *Disjunction*[+U, ?N])

[~U] *QuantifiableAssertion*[?N]

(? <= *Disjunction*[?U, ?N])

(? <! *Disjunction*[?U, ?N])

QuantifiableAssertion[N] ::

(? = *Disjunction*[~U, ?N])

(? ! *Disjunction*[~U, ?N])

ExtendedAtom[N] ::

.

\ *AtomEscape*[~U, ?N]

\ [lookahead = c]

CharacterClass[~U]

(*Disjunction*[~U, ?N])

(? : *Disjunction*[~U, ?N])

InvalidBracedQuantifier

ExtendedPatternCharacter

InvalidBracedQuantifier ::

{ *DecimalDigits* }

{ *DecimalDigits* , }

{ *DecimalDigits* , *DecimalDigits* }

ExtendedPatternCharacter ::

SourceCharacter but not one of ^ $ \ . * + ? ( ) [|

AtomEscape[U, N] ::

[+U] *DecimalEscape*

[~U] *DecimalEscape* but only if the CapturingGroupNumber of *DecimalEscape* is <= _NcapturingParens_

CharacterClassEscape[?U]

CharacterEscape[~U, ?N]

[+N] k *GroupName*[?U]

CharacterEscape[U, N] ::

ControlEscape

c *ControlLetter*

0 [lookahead ∉ *DecimalDigit*]

HexEscapeSequence

RegExpUnicodeEscapeSequence[?U]

[~U] *LegacyOctalEscapeSequence*

IdentityEscape[?U, ?N]

IdentityEscape[U, N] ::

[+U] *SyntaxCharacter*

[+U] /

[~U] *SourceCharacterIdentityEscape*[?N]

SourceCharacterIdentityEscape[N] ::

[~N] *SourceCharacter* but not **c**

[+N] *SourceCharacter* but not one of **c** or **k**

ClassAtomNoDash[U, N] ::

SourceCharacter but not one of **** or **]** or **-**

**** *ClassEscape*[?U, ?N]

**** [lookahead = **c**]

ClassEscape[U, N] ::

b

[+U] **-**

[~U] **c** *ClassControlLetter*

CharacterClassEscape[?U]

CharacterEscape[?U, ?N]

ClassControlLetter ::

DecimalDigit

_

NOTE When the same left hand sides occurs with both [+U] and [~U] guards it is to control the disambiguation priority.

B.1.4.1 Static Semantics: Early Errors

The semantics of 21.2.1.1 is extended as follows:

ExtendedAtom :: *InvalidBracedQuantifier*

- It is a Syntax Error if any source text matches this rule.

NonemptyClassRanges :: *ClassAtom* **-** *ClassAtom* *ClassRanges*

- It is a Syntax Error if IsCharacterClass of the first *ClassAtom* is **true** or IsCharacterClass of the second *ClassAtom* is **true** and this production has a [U] parameter.

NonemptyClassRangesNoDash :: *ClassAtomNoDash* **-** *ClassAtom* *ClassRanges*

- It is a Syntax Error if IsCharacterClass of *ClassAtomNoDash* is **true** or IsCharacterClass of *ClassAtom* is **true** and this production has a [U] parameter.

B.1.4.2 Static Semantics: IsCharacterClass

The semantics of 21.2.1.3 is extended as follows:

ClassAtomNoDash :: **** [lookahead = **c**]

1. Return **false**.

B.1.4.3 Static Semantics: CharacterValue

The semantics of 21.2.1.4 is extended as follows:

ClassAtomNoDash :: \ [lookahead = c]

1. Return the code point value of U+005C (REVERSE SOLIDUS).

ClassEscape :: c *ClassControlLetter*

1. Let *ch* be the code point matched by *ClassControlLetter*.
2. Let *i* be *ch*'s code point value.
3. Return the remainder of dividing *i* by 32.

CharacterEscape :: *LegacyOctalEscapeSequence*

1. Evaluate the SV of *LegacyOctalEscapeSequence* (see B.1.2) to obtain a code unit *cu*.
2. Return the numeric value of *cu*.

B.1.4.4 Pattern Semantics

The semantics of 21.2.2 is extended as follows:

Within 21.2.2.5 reference to " *Atom* :: (*GroupSpecifier Disjunction*) " are to be interpreted as meaning " *Atom* :: (*GroupSpecifier Disjunction*) " or " *ExtendedAtom* :: (*Disjunction*) ".

Term (21.2.2.5) includes the following additional evaluation rules:

The production *Term* :: *QuantifiableAssertion Quantifier* evaluates the same as the production *Term* :: *Atom Quantifier* but with *QuantifiableAssertion* substituted for *Atom*.

The production *Term* :: *ExtendedAtom Quantifier* evaluates the same as the production *Term* :: *Atom Quantifier* but with *ExtendedAtom* substituted for *Atom*.

The production *Term* :: *ExtendedAtom* evaluates the same as the production *Term* :: *Atom* but with *ExtendedAtom* substituted for *Atom*.

Assertion (21.2.2.6) includes the following additional evaluation rule:

The production *Assertion* :: *QuantifiableAssertion* evaluates as follows:

1. Evaluate *QuantifiableAssertion* to obtain a Matcher *m*.
2. Return *m*.

Assertion (21.2.2.6) evaluation rules for the *Assertion* :: (? = *Disjunction*) and *Assertion* :: (? ! *Disjunction*) productions are also used for the *QuantifiableAssertion* productions, but with *QuantifiableAssertion* substituted for *Assertion*.

Atom (21.2.2.8) evaluation rules for the *Atom* productions except for *Atom* :: *PatternCharacter* are also used for the *ExtendedAtom* productions, but with *ExtendedAtom* substituted for *Atom*. The following evaluation rules, with parameter *direction*, are also added:

The production *ExtendedAtom* :: \ [lookahead = c] evaluates as follows:

1. Let *A* be the CharSet containing the single character **** U+005C (REVERSE SOLIDUS).
2. Call CharacterSetMatcher(*A*, **false**, *direction*) and return its Matcher result.

The production *ExtendedAtom* **::** *ExtendedPatternCharacter* evaluates as follows:

1. Let *ch* be the character represented by *ExtendedPatternCharacter*.
2. Let *A* be a one-element CharSet containing the character *ch*.
3. Call CharacterSetMatcher(*A*, **false**, *direction*) and return its Matcher result.

CharacterEscape (21.2.2.10) includes the following additional evaluation rule:

The production *CharacterEscape* **::** *LegacyOctalEscapeSequence* evaluates as follows:

1. Let *cv* be the CharacterValue of this *CharacterEscape*.
2. Return the character whose character value is *cv*.

NonemptyClassRanges (21.2.2.15) modifies the following evaluation rule:

The production *NonemptyClassRanges* **::** *ClassAtom* **-** *ClassAtom* *ClassRanges* evaluates as follows:

1. Evaluate the first *ClassAtom* to obtain a CharSet *A*.
2. Evaluate the second *ClassAtom* to obtain a CharSet *B*.
3. Evaluate *ClassRanges* to obtain a CharSet *C*.
4. Call CharacterRangeOrUnion(*A*, *B*) and let *D* be the resulting CharSet.
5. Return the union of CharSets *D* and *C*.

NonemptyClassRangesNoDash (21.2.2.16) modifies the following evaluation rule:

The production *NonemptyClassRangesNoDash* **::** *ClassAtomNoDash* **-** *ClassAtom* *ClassRanges* evaluates as follows:

1. Evaluate *ClassAtomNoDash* to obtain a CharSet *A*.
2. Evaluate *ClassAtom* to obtain a CharSet *B*.
3. Evaluate *ClassRanges* to obtain a CharSet *C*.
4. Call CharacterRangeOrUnion(*A*, *B*) and let *D* be the resulting CharSet.
5. Return the union of CharSets *D* and *C*.

ClassEscape (21.2.2.19) includes the following additional evaluation rule:

The production *ClassEscape* **::** **c** *ClassControlLetter* evaluates as follows:

1. Let *cv* be the CharacterValue of this *ClassEscape*.
2. Let *c* be the character whose character value is *cv*.
3. Return the CharSet containing the single character *c*.

ClassAtomNoDash (21.2.2.18) includes the following additional evaluation rule:

The production *ClassAtomNoDash* **::** \ [lookahead = **c**] evaluates as follows:

1. Return the CharSet containing the single character **** U+005C (REVERSE SOLIDUS).

NOTE This production can only be reached from the sequence **\c** within a character class where it is not followed by an acceptable control character.

B.1.4.4.1 Runtime Semantics: CharacterRangeOrUnion (*A*, *B*)

The abstract operation CharacterRangeOrUnion takes two CharSet parameters *A* and *B* and performs the following steps:

1. If *Unicode* is **false**, then
    a. If *A* does not contain exactly one character or *B* does not contain exactly one character, then
        i. Let *C* be the CharSet containing the single character **-** U+002D (HYPHEN-MINUS).
        ii. Return the union of CharSets *A*, *B* and *C*.
2. Return CharacterRange(*A*, *B*).

B.2 Additional Built-in Properties

When the ECMAScript host is a web browser the following additional properties of the standard built-in objects are defined.

B.2.1 Additional Properties of the Global Object

The entries in Table 85 are added to Table 8.

Table 85: Additional Well-known Intrinsic Objects

Intrinsic Name	Global Name	ECMAScript Language Association
%escape%	**`escape`**	The **`escape`** function (B.2.1.1)
%unescape%	**`unescape`**	The **`unescape`** function (B.2.1.2)

B.2.1.1 escape (*string*)

The **`escape`** function is a property of the global object. It computes a new version of a String value in which certain code units have been replaced by a hexadecimal escape sequence.

For those code units being replaced whose value is **`0x00FF`** or less, a two-digit escape sequence of the form **`%`*`xx`*** is used. For those characters being replaced whose code unit value is greater than **`0x00FF`**, a four-digit escape sequence of the form **`%u`*`xxxx`*** is used.

The **`escape`** function is the *%escape%* intrinsic object. When the **`escape`** function is called with one argument *string*, the following steps are taken:

1. Set *string* to ? ToString(*string*).
2. Let *length* be the number of code units in *string*.
3. Let *R* be the empty String.
4. Let *k* be 0.
5. Repeat, while *k* < *length*,
    a. Let *char* be the code unit (represented as a 16-bit unsigned integer) at index *k* within *string*.
    b. If *char* is one of the code units in
    "ABCDEFGHIJKLMNOPQRSTUVWXYZabcdefghijklmnopqrstuvwxyz0123456789@*_+-./", then
        i. Let *S* be the String value containing the single code unit *char*.

c. Else if *char* ≥ 256, then
    i. Let *n* be the numeric value of *char*.
    ii. Let *S* be the string-concatenation of:
        - "%**u**"
        - the String representation of *n*, formatted as a four-digit uppercase hexadecimal number, padded to the left with zeroes if necessary
d. Else,
    i. Assert: *char* < 256.
    ii. Let *n* be the numeric value of *char*.
    iii. Let *S* be the string-concatenation of:
        - "%"
        - the String representation of *n*, formatted as a two-digit uppercase hexadecimal number, padded to the left with a zero if necessary
e. Set *R* to the string-concatenation of the previous value of *R* and *S*.
f. Set *k* to *k* + 1.

6. Return *R*.

NOTE The encoding is partly based on the encoding described in RFC 1738, but the entire encoding specified in this standard is described above without regard to the contents of RFC 1738. This encoding does not reflect changes to RFC 1738 made by RFC 3986.

B.2.1.2 unescape (*string*)

The **`unescape`** function is a property of the global object. It computes a new version of a String value in which each escape sequence of the sort that might be introduced by the **`escape`** function is replaced with the code unit that it represents.

The **`unescape`** function is the *%unescape%* intrinsic object. When the **`unescape`** function is called with one argument *string*, the following steps are taken:

1. Set *string* to ? ToString(*string*).
2. Let *length* be the number of code units in *string*.
3. Let *R* be the empty String.
4. Let *k* be 0.
5. Repeat, while *k* ≠ *length*
    a. Let *c* be the code unit at index *k* within *string*.
    b. If *c* is the code unit 0x0025 (PERCENT SIGN), then
        i. If *k* ≤ *length* - 6 and the code unit at index *k* + 1 within *string* is the code unit 0x0075 (LATIN SMALL LETTER U) and the four code units at indices *k* + 2, *k* + 3, *k* + 4, and *k* + 5 within *string* are all hexadecimal digits, then
            1. Set *c* to the code unit whose value is the integer represented by the four hexadecimal digits at indices *k* + 2, *k* + 3, *k* + 4, and *k* + 5 within *string*.
            2. Set *k* to *k* + 5.
        ii. Else if *k* ≤ *length* - 3 and the two code units at indices *k* + 1 and *k* + 2 within *string* are both hexadecimal digits, then
            1. Set *c* to the code unit whose value is the integer represented by two zeroes plus the two hexadecimal digits at indices *k* + 1 and *k* + 2 within *string*.
            2. Set *k* to *k* + 2.

c. Set R to the string-concatenation of the previous value of R and c.
d. Set k to $k + 1$.

6. Return R.

B.2.2 Additional Properties of the Object.prototype Object

B.2.2.1 Object.prototype.__proto__

`Object.prototype.__proto__` is an accessor property with attributes { [[Enumerable]]: **false**, [[Configurable]]: **true** }. The [[Get]] and [[Set]] attributes are defined as follows:

B.2.2.1.1 get Object.prototype.__proto__

The value of the [[Get]] attribute is a built-in function that requires no arguments. It performs the following steps:

1. Let O be ? ToObject(**this** value).
2. Return ? O.[[GetPrototypeOf]]().

B.2.2.1.2 set Object.prototype.__proto__

The value of the [[Set]] attribute is a built-in function that takes an argument *proto*. It performs the following steps:

1. Let O be ? RequireObjectCoercible(**this** value).
2. If Type(*proto*) is neither Object nor Null, return **undefined**.
3. If Type(O) is not Object, return **undefined**.
4. Let *status* be ? O.[[SetPrototypeOf]](*proto*).
5. If *status* is **false**, throw a **TypeError** exception.
6. Return **undefined**.

B.2.2.2 Object.prototype.__defineGetter__ (*P*, *getter*)

When the **`__defineGetter__`** method is called with arguments P and *getter*, the following steps are taken:

1. Let O be ? ToObject(**this** value).
2. If IsCallable(*getter*) is **false**, throw a **TypeError** exception.
3. Let *desc* be PropertyDescriptor { [[Get]]: *getter*, [[Enumerable]]: **true**, [[Configurable]]: **true** }.
4. Let *key* be ? ToPropertyKey(P).
5. Perform ? DefinePropertyOrThrow(O, *key*, *desc*).
6. Return **undefined**.

B.2.2.3 Object.prototype.__defineSetter__ (*P*, *setter*)

When the **`__defineSetter__`** method is called with arguments P and *setter*, the following steps are taken:

1. Let O be ? ToObject(**this** value).
2. If IsCallable(*setter*) is **false**, throw a **TypeError** exception.
3. Let *desc* be PropertyDescriptor { [[Set]]: *setter*, [[Enumerable]]: **true**, [[Configurable]]: **true** }.
4. Let *key* be ? ToPropertyKey(P).
5. Perform ? DefinePropertyOrThrow(O, *key*, *desc*).

6. Return **undefined**.

B.2.2.4 Object.prototype.__lookupGetter__ (*P*)

When the **`__lookupGetter__`** method is called with argument *P*, the following steps are taken:

1. Let *O* be ? ToObject(**this** value).
2. Let *key* be ? ToPropertyKey(*P*).
3. Repeat,
    a. Let *desc* be ? *O*.[[GetOwnProperty]](*key*).
    b. If *desc* is not **undefined**, then
        i. If IsAccessorDescriptor(*desc*) is **true**, return *desc*.[[Get]].
        ii. Return **undefined**.
    c. Set *O* to ? *O*.[[GetPrototypeOf]]().
    d. If *O* is **null**, return **undefined**.

B.2.2.5 Object.prototype.__lookupSetter__ (*P*)

When the **`__lookupSetter__`** method is called with argument *P*, the following steps are taken:

1. Let *O* be ? ToObject(**this** value).
2. Let *key* be ? ToPropertyKey(*P*).
3. Repeat,
    a. Let *desc* be ? *O*.[[GetOwnProperty]](*key*).
    b. If *desc* is not **undefined**, then
        i. If IsAccessorDescriptor(*desc*) is **true**, return *desc*.[[Set]].
        ii. Return **undefined**.
    c. Set *O* to ? *O*.[[GetPrototypeOf]]().
    d. If *O* is **null**, return **undefined**.

B.2.3 Additional Properties of the String.prototype Object

B.2.3.1 String.prototype.substr (*start*, *length*)

The **`substr`** method takes two arguments, *start* and *length*, and returns a substring of the result of converting the **this** object to a String, starting from index *start* and running for *length* code units (or through the end of the String if *length* is **undefined**). If *start* is negative, it is treated as *sourceLength* + *start* where *sourceLength* is the length of the String. The result is a String value, not a String object. The following steps are taken:

1. Let *O* be ? RequireObjectCoercible(**this** value).
2. Let *S* be ? ToString(*O*).
3. Let *intStart* be ? ToInteger(*start*).
4. If *length* is **undefined**, let *end* be +∞; otherwise let *end* be ? ToInteger(*length*).
5. Let *size* be the number of code units in *S*.
6. If *intStart* < 0, set *intStart* to max(*size* + *intStart*, 0).
7. Let *resultLength* be min(max(*end*, 0), *size* - *intStart*).
8. If *resultLength* ≤ 0, return the empty String.
9. Return the String value containing *resultLength* consecutive code units from *S* beginning with the code unit at

index *intStart*.

> NOTE The **`substr`** function is intentionally generic; it does not require that its **this** value be a String object. Therefore it can be transferred to other kinds of objects for use as a method.

B.2.3.2 String.prototype.anchor (*name*)

When the **`anchor`** method is called with argument *name*, the following steps are taken:

1. Let *S* be the **this** value.
2. Return ? CreateHTML(*S*, **"a"**, **"name"**, *name*).

B.2.3.2.1 Runtime Semantics: CreateHTML (*string*, *tag*, *attribute*, *value*)

The abstract operation CreateHTML is called with arguments *string*, *tag*, *attribute*, and *value*. The arguments *tag* and *attribute* must be String values. The following steps are taken:

1. Let *str* be ? RequireObjectCoercible(*string*).
2. Let *S* be ? ToString(*str*).
3. Let *p1* be the string-concatenation of **"<"** and *tag*.
4. If *attribute* is not the empty String, then
   a. Let *V* be ? ToString(*value*).
   b. Let *escapedV* be the String value that is the same as *V* except that each occurrence of the code unit 0x0022 (QUOTATION MARK) in *V* has been replaced with the six code unit sequence **"""**.
   c. Set *p1* to the string-concatenation of:
      - *p1*
      - the code unit 0x0020 (SPACE)
      - *attribute*
      - the code unit 0x003D (EQUALS SIGN)
      - the code unit 0x0022 (QUOTATION MARK)
      - *escapedV*
      - the code unit 0x0022 (QUOTATION MARK)
5. Let *p2* be the string-concatenation of *p1* and **">"**.
6. Let *p3* be the string-concatenation of *p2* and *S*.
7. Let *p4* be the string-concatenation of *p3*, **"</"**, *tag*, and **">"**.
8. Return *p4*.

B.2.3.3 String.prototype.big ( )

When the **`big`** method is called with no arguments, the following steps are taken:

1. Let *S* be the **this** value.
2. Return ? CreateHTML(*S*, **"big"**, **""**, **""**).

B.2.3.4 String.prototype.blink ( )

When the **`blink`** method is called with no arguments, the following steps are taken:

1. Let *S* be the **this** value.

2. Return ? CreateHTML(*S*, **"blink"**, **'"'**, **'"'**).

B.2.3.5 String.prototype.bold ( )

When the **`bold`** method is called with no arguments, the following steps are taken:

1. Let *S* be the **this** value.
2. Return ? CreateHTML(*S*, **"b"**, **'"'**, **'"'**).

B.2.3.6 String.prototype.fixed ( )

When the **`fixed`** method is called with no arguments, the following steps are taken:

1. Let *S* be the **this** value.
2. Return ? CreateHTML(*S*, **"tt"**, **'"'**, **'"'**).

B.2.3.7 String.prototype.fontcolor (*color*)

When the **`fontcolor`** method is called with argument *color*, the following steps are taken:

1. Let *S* be the **this** value.
2. Return ? CreateHTML(*S*, **"font"**, **"color"**, *color*).

B.2.3.8 String.prototype.fontsize (*size*)

When the **`fontsize`** method is called with argument *size*, the following steps are taken:

1. Let *S* be the **this** value.
2. Return ? CreateHTML(*S*, **"font"**, **"size"**, *size*).

B.2.3.9 String.prototype.italics ( )

When the **`italics`** method is called with no arguments, the following steps are taken:

1. Let *S* be the **this** value.
2. Return ? CreateHTML(*S*, **"i"**, **'"'**, **'"'**).

B.2.3.10 String.prototype.link (*url*)

When the **`link`** method is called with argument *url*, the following steps are taken:

1. Let *S* be the **this** value.
2. Return ? CreateHTML(*S*, **"a"**, **"href"**, *url*).

B.2.3.11 String.prototype.small ( )

When the **`small`** method is called with no arguments, the following steps are taken:

1. Let *S* be the **this** value.
2. Return ? CreateHTML(*S*, **"small"**, **'"'**, **'"'**).

B.2.3.12 String.prototype.strike ( )

When the **`strike`** method is called with no arguments, the following steps are taken:

1. Let *S* be the **this** value.
2. Return ? CreateHTML(*S*, **"strike"**, **'"'**, **'"'**).

B.2.3.13 String.prototype.sub ( )

When the **`sub`** method is called with no arguments, the following steps are taken:

1. Let *S* be the **this** value.
2. Return ? CreateHTML(*S*, **"sub"**, **'"'**, **'"'**).

B.2.3.14 String.prototype.sup ( )

When the **`sup`** method is called with no arguments, the following steps are taken:

1. Let *S* be the **this** value.
2. Return ? CreateHTML(*S*, **"sup"**, **'"'**, **'"'**).

B.2.3.15 String.prototype.trimLeft ( )

> NOTE The property **"trimStart"** is preferred. The **"trimLeft"** property is provided principally for compatibility with old code. It is recommended that the **"trimStart"** property be used in new ECMAScript code.

The initial value of the **"trimLeft"** property is the same function object as the initial value of the **`String.prototype.trimStart`** property.

B.2.3.16 String.prototype.trimRight ( )

> NOTE The property **"trimEnd"** is preferred. The **"trimRight"** property is provided principally for compatibility with old code. It is recommended that the **"trimEnd"** property be used in new ECMAScript code.

The initial value of the **"trimRight"** property is the same function object as the initial value of the **`String.prototype.trimEnd`** property.

B.2.4 Additional Properties of the Date.prototype Object

B.2.4.1 Date.prototype.getYear ( )

> NOTE The **`getFullYear`** method is preferred for nearly all purposes, because it avoids the "year 2000 problem."

When the **`getYear`** method is called with no arguments, the following steps are taken:

1. Let *t* be ? thisTimeValue(**this** value).
2. If *t* is **NaN**, return **NaN**.
3. Return YearFromTime(LocalTime(*t*)) - 1900.

B.2.4.2 Date.prototype.setYear (*year*)

> NOTE The **`setFullYear`** method is preferred for nearly all purposes, because it avoids the "year 2000 problem."

When the **`setYear`** method is called with one argument *year*, the following steps are taken:

1. Let *t* be ? thisTimeValue(**this** value).
2. If *t* is **NaN**, set *t* to **+0**; otherwise, set *t* to LocalTime(*t*).
3. Let *y* be ? ToNumber(*year*).
4. If *y* is **NaN**, then
   a. Set the [[DateValue]] internal slot of this Date object to **NaN**.
   b. Return **NaN**.
5. Let *yi* be ! ToInteger(*y*).
6. If $0 \leq yi \leq 99$, let *yyyy* be *yi* + 1900.
7. Else, let *yyyy* be *y*.
8. Let *d* be MakeDay(*yyyy*, MonthFromTime(*t*), DateFromTime(*t*)).
9. Let *date* be UTC(MakeDate(*d*, TimeWithinDay(*t*))).
10. Set the [[DateValue]] internal slot of this Date object to TimeClip(*date*).
11. Return the value of the [[DateValue]] internal slot of this Date object.

B.2.4.3 Date.prototype.toGMTString ( )

> NOTE The property **"toUTCString"** is preferred. The **"toGMTString"** property is provided principally for compatibility with old code. It is recommended that the **"toUTCString"** property be used in new ECMAScript code.

The function object that is the initial value of **`Date.prototype.toGMTString`** is the same function object that is the initial value of **`Date.prototype.toUTCString`**.

B.2.5 Additional Properties of the RegExp.prototype Object

B.2.5.1 RegExp.prototype.compile (*pattern*, *flags*)

When the **`compile`** method is called with arguments *pattern* and *flags*, the following steps are taken:

1. Let *O* be the **this** value.
2. If Type(*O*) is not Object or Type(*O*) is Object and *O* does not have a [[RegExpMatcher]] internal slot, then
   a. Throw a **TypeError** exception.
3. If Type(*pattern*) is Object and *pattern* has a [[RegExpMatcher]] internal slot, then
   a. If *flags* is not **undefined**, throw a **TypeError** exception.
   b. Let *P* be *pattern*.[[OriginalSource]].

c. Let *F* be *pattern*.[[OriginalFlags]].

4. Else,
   a. Let *P* be *pattern*.
   b. Let *F* be *flags*.
5. Return ? RegExpInitialize(*O*, *P*, *F*).

NOTE The **`compile`** method completely reinitializes the **this** object RegExp with a new pattern and flags. An implementation may interpret use of this method as an assertion that the resulting RegExp object will be used multiple times and hence is a candidate for extra optimization.

B.3 Other Additional Features

B.3.1 __proto__ Property Names in Object Initializers

The following Early Error rule is added to those in 12.2.6.1. When *ObjectLiteral* appears in a context where *ObjectAssignmentPattern* is required the Early Error rule is **not** applied. In addition, it is not applied when initially parsing a *CoverParenthesizedExpressionAndArrowParameterList* or a *CoverCallExpressionAndAsyncArrowHead*.

ObjectLiteral : `{` *PropertyDefinitionList* `}`
ObjectLiteral : `{` *PropertyDefinitionList* `,` `}`

- It is a Syntax Error if PropertyNameList of *PropertyDefinitionList* contains any duplicate entries for **"__proto__"** and at least two of those entries were obtained from productions of the form *PropertyDefinition* : *PropertyName* : *AssignmentExpression* .

NOTE The List returned by PropertyNameList does not include string literal property names defined as using a *ComputedPropertyName*.

In 12.2.6.8 the PropertyDefinitionEvaluation algorithm for the production
PropertyDefinition : *PropertyName* : *AssignmentExpression*
is replaced with the following definition:

PropertyDefinition : *PropertyName* : *AssignmentExpression*

1. Let *propKey* be the result of evaluating *PropertyName*.
2. ReturnIfAbrupt(*propKey*).
3. If *propKey* is the String value **"__proto__"** and if IsComputedPropertyKey(*PropertyName*) is **false**, then
   a. Let *isProtoSetter* be **true**.
4. Else,
   a. Let *isProtoSetter* be **false**.
5. If IsAnonymousFunctionDefinition(*AssignmentExpression*) is **true** and *isProtoSetter* is **false**, then
   a. Let *propValue* be NamedEvaluation of *AssignmentExpression* with argument *propKey*.
6. Else,
   a. Let *exprValueRef* be the result of evaluating *AssignmentExpression*.
   b. Let *propValue* be ? GetValue(*exprValueRef*).
7. If *isProtoSetter* is **true**, then
   a. If Type(*propValue*) is either Object or Null, then

i. Return *object*.[[SetPrototypeOf]](*propValue*).

b. Return NormalCompletion(empty).

8. Assert: *enumerable* is **true**.
9. Assert: *object* is an ordinary, extensible object with no non-configurable properties.
10. Return ! CreateDataPropertyOrThrow(*object*, *propKey*, *propValue*).

B.3.2 Labelled Function Declarations

Prior to ECMAScript 2015, the specification of *LabelledStatement* did not allow for the association of a statement label with a *FunctionDeclaration*. However, a labelled *FunctionDeclaration* was an allowable extension for non-strict code and most browser-hosted ECMAScript implementations supported that extension. In ECMAScript 2015, the grammar productions for *LabelledStatement* permits use of *FunctionDeclaration* as a *LabelledItem* but 13.13.1 includes an Early Error rule that produces a Syntax Error if that occurs. For web browser compatibility, that rule is modified with the addition of the highlighted text:

LabelledItem : *FunctionDeclaration*

- It is a Syntax Error if any strict mode source code matches this rule.

NOTE The early error rules for *WithStatement*, *IfStatement*, and *IterationStatement* prevent these statements from containing a labelled *FunctionDeclaration* in non-strict code.

B.3.3 Block-Level Function Declarations Web Legacy Compatibility Semantics

Prior to ECMAScript 2015, the ECMAScript specification did not define the occurrence of a *FunctionDeclaration* as an element of a *Block* statement's *StatementList*. However, support for that form of *FunctionDeclaration* was an allowable extension and most browser-hosted ECMAScript implementations permitted them. Unfortunately, the semantics of such declarations differ among those implementations. Because of these semantic differences, existing web ECMAScript code that uses *Block* level function declarations is only portable among browser implementation if the usage only depends upon the semantic intersection of all of the browser implementations for such declarations. The following are the use cases that fall within that intersection semantics:

1. A function is declared and only referenced within a single block
   - One or more *FunctionDeclaration*s whose *BindingIdentifier* is the name *f* occur within the function code of an enclosing function *g* and that declaration is nested within a *Block*.
   - No other declaration of *f* that is not a **`var`** declaration occurs within the function code of *g*
   - All occurrences of *f* as an *IdentifierReference* are within the *StatementList* of the *Block* containing the declaration of *f*.
2. A function is declared and possibly used within a single *Block* but also referenced by an inner function definition that is not contained within that same *Block*.
   - One or more *FunctionDeclaration*s whose *BindingIdentifier* is the name *f* occur within the function code of an enclosing function *g* and that declaration is nested within a *Block*.
   - No other declaration of *f* that is not a **`var`** declaration occurs within the function code of *g*
   - There may be occurrences of *f* as an *IdentifierReference* within the *StatementList* of the *Block* containing the declaration of *f*.

- There is at least one occurrence of *f* as an *IdentifierReference* within another function *h* that is nested within *g* and no other declaration of *f* shadows the references to *f* from within *h*.
- All invocations of *h* occur after the declaration of *f* has been evaluated.

3. A function is declared and possibly used within a single block but also referenced within subsequent blocks.

   - One or more *FunctionDeclaration* whose *BindingIdentifier* is the name *f* occur within the function code of an enclosing function *g* and that declaration is nested within a *Block*.
   - No other declaration of *f* that is not a **`var`** declaration occurs within the function code of *g*
   - There may be occurrences of *f* as an *IdentifierReference* within the *StatementList* of the *Block* containing the declaration of *f*.
   - There is at least one occurrence of *f* as an *IdentifierReference* within the function code of *g* that lexically follows the *Block* containing the declaration of *f*.

The first use case is interoperable with the semantics of *Block* level function declarations provided by ECMAScript 2015. Any pre-existing ECMAScript code that employs that use case will operate using the Block level function declarations semantics defined by clauses 9, 13, and 14 of this specification.

ECMAScript 2015 interoperability for the second and third use cases requires the following extensions to the clause 9, clause 14, clause 18.2.1 and clause 15.1.11 semantics.

If an ECMAScript implementation has a mechanism for reporting diagnostic warning messages, a warning should be produced when code contains a *FunctionDeclaration* for which these compatibility semantics are applied and introduce observable differences from non-compatibility semantics. For example, if a var binding is not introduced because its introduction would create an early error, a warning message should not be produced.

B.3.3.1 Changes to FunctionDeclarationInstantiation

During FunctionDeclarationInstantiation the following steps are performed in place of step 29:

1. If *strict* is **false**, then
   a. For each *FunctionDeclaration f* that is directly contained in the *StatementList* of a *Block*, *CaseClause*, or *DefaultClause*, do
      i. Let *F* be StringValue of the *BindingIdentifier* of *f*.
      ii. If replacing the *FunctionDeclaration f* with a *VariableStatement* that has *F* as a *BindingIdentifier* would not produce any Early Errors for *func* and *F* is not an element of *parameterNames*, then
         1. NOTE: A var binding for *F* is only instantiated here if it is neither a VarDeclaredName, the name of a formal parameter, or another *FunctionDeclaration*.
         2. If *initializedBindings* does not contain *F* and *F* is not **"arguments"**, then
            a. Perform ! *varEnvRec*.CreateMutableBinding(*F*, **false**).
            b. Perform *varEnvRec*.InitializeBinding(*F*, **undefined**).
            c. Append *F* to *instantiatedVarNames*.
         3. When the *FunctionDeclaration f* is evaluated, perform the following steps in place of the *FunctionDeclaration* Evaluation algorithm provided in 14.1.25:
            a. Let *fenv* be the running execution context's VariableEnvironment.
            b. Let *fenvRec* be *fenv*'s EnvironmentRecord.
            c. Let *benv* be the running execution context's LexicalEnvironment.
            d. Let *benvRec* be *benv*'s EnvironmentRecord.
            e. Let *fobj* be ! *benvRec*.GetBindingValue(*F*, **false**).
            f. Perform ! *fenvRec*.SetMutableBinding(*F*, *fobj*, **false**).

g. Return NormalCompletion(empty).

B.3.3.2 Changes to GlobalDeclarationInstantiation

During GlobalDeclarationInstantiation the following steps are performed in place of step 14:

1. Let *strict* be IsStrict of *script*.
2. If *strict* is **false**, then
    a. Let *declaredFunctionOrVarNames* be a new empty List.
    b. Append to *declaredFunctionOrVarNames* the elements of *declaredFunctionNames*.
    c. Append to *declaredFunctionOrVarNames* the elements of *declaredVarNames*.
    d. For each *FunctionDeclaration f* that is directly contained in the *StatementList* of a *Block*, *CaseClause*, or *DefaultClause* Contained within *script*, do
        i. Let *F* be StringValue of the *BindingIdentifier* of *f*.
        ii. If replacing the *FunctionDeclaration f* with a *VariableStatement* that has *F* as a *BindingIdentifier* would not produce any Early Errors for *script*, then
            1. If *envRec*.HasLexicalDeclaration(*F*) is **false**, then
                a. Let *fnDefinable* be ? *envRec*.CanDeclareGlobalVar(*F*).
                b. If *fnDefinable* is **true**, then
                i. NOTE: A var binding for *F* is only instantiated here if it is neither a VarDeclaredName nor the name of another *FunctionDeclaration*.
                ii. If *declaredFunctionOrVarNames* does not contain *F*, then
                i. Perform ? *envRec*.CreateGlobalVarBinding(*F*, **false**).
                ii. Append *F* to *declaredFunctionOrVarNames*.
                iii. When the *FunctionDeclaration f* is evaluated, perform the following steps in place of the *FunctionDeclaration* Evaluation algorithm provided in 14.1.25:
                i. Let *genv* be the running execution context's VariableEnvironment.
                ii. Let *genvRec* be *genv*'s EnvironmentRecord.
                iii. Let *benv* be the running execution context's LexicalEnvironment.
                iv. Let *benvRec* be *benv*'s EnvironmentRecord.
                v. Let *fobj* be ! *benvRec*.GetBindingValue(*F*, **false**).
                vi. Perform ? *genvRec*.SetMutableBinding(*F*, *fobj*, **false**).
                vii. Return NormalCompletion(empty).

B.3.3.3 Changes to EvalDeclarationInstantiation

During EvalDeclarationInstantiation the following steps are performed in place of step 9:

1. If *strict* is **false**, then
    a. Let *declaredFunctionOrVarNames* be a new empty List.
    b. Append to *declaredFunctionOrVarNames* the elements of *declaredFunctionNames*.
    c. Append to *declaredFunctionOrVarNames* the elements of *declaredVarNames*.
    d. For each *FunctionDeclaration f* that is directly contained in the *StatementList* of a *Block*, *CaseClause*, or *DefaultClause* Contained within *body*, do
        i. Let *F* be StringValue of the *BindingIdentifier* of *f*.
        ii. If replacing the *FunctionDeclaration f* with a *VariableStatement* that has *F* as a *BindingIdentifier* would not produce any Early Errors for *body*, then
            1. Let *bindingExists* be **false**.
            2. Let *thisLex* be *lexEnv*.

3. Assert: The following loop will terminate.
4. Repeat, while *thisLex* is not the same as *varEnv*,
    a. Let *thisEnvRec* be *thisLex*'s EnvironmentRecord.
    b. If *thisEnvRec* is not an object Environment Record, then
        i. If *thisEnvRec*.HasBinding(*F*) is **true**, then
            i. Let *bindingExists* be **true**.
    c. Set *thisLex* to *thisLex*'s outer environment reference.
5. If *bindingExists* is **false** and *varEnvRec* is a global Environment Record, then
    a. If *varEnvRec*.HasLexicalDeclaration(*F*) is **false**, then
        i. Let *fnDefinable* be ? *varEnvRec*.CanDeclareGlobalVar(*F*).
    b. Else,
        i. Let *fnDefinable* be **false**.
6. Else,
    a. Let *fnDefinable* be **true**.
7. If *bindingExists* is **false** and *fnDefinable* is **true**, then
    a. If *declaredFunctionOrVarNames* does not contain *F*, then
        i. If *varEnvRec* is a global Environment Record, then
            i. Perform ? *varEnvRec*.CreateGlobalVarBinding(*F*, **true**).
        ii. Else,
            i. Let *bindingExists* be *varEnvRec*.HasBinding(*F*).
            ii. If *bindingExists* is **false**, then
                i. Perform ! *varEnvRec*.CreateMutableBinding(*F*, **true**).
                ii. Perform ! *varEnvRec*.InitializeBinding(*F*, **undefined**).
        iii. Append *F* to *declaredFunctionOrVarNames*.
    b. When the *FunctionDeclaration f* is evaluated, perform the following steps in place of the *FunctionDeclaration* Evaluation algorithm provided in 14.1.25:
        i. Let *genv* be the running execution context's VariableEnvironment.
        ii. Let *genvRec* be *genv*'s EnvironmentRecord.
        iii. Let *benv* be the running execution context's LexicalEnvironment.
        iv. Let *benvRec* be *benv*'s EnvironmentRecord.
        v. Let *fobj* be ! *benvRec*.GetBindingValue(*F*, **false**).
        vi. Perform ? *genvRec*.SetMutableBinding(*F*, *fobj*, **false**).
        vii. Return NormalCompletion(empty).

B.3.3.4 Changes to Block Static Semantics: Early Errors

For web browser compatibility, that rule is modified with the addition of the highlighted text:

Block : `{` *StatementList* `}`

- It is a Syntax Error if the LexicallyDeclaredNames of *StatementList* contains any duplicate entries, unless the source code matching this production is not strict mode code and the duplicate entries are only bound by FunctionDeclarations.

B.3.3.5 Changes to `switch` Statement Static Semantics: Early Errors

For web browser compatibility, that rule is modified with the addition of the highlighted text:

SwitchStatement : `switch` `(` *Expression* `)` *CaseBlock*

- It is a Syntax Error if the LexicallyDeclaredNames of *CaseBlock* contains any duplicate entries, unless the source code matching this production is not strict mode code and the duplicate entries are only bound by FunctionDeclarations.

B.3.3.6 Changes to BlockDeclarationInstantiation

During BlockDeclarationInstantiation the following steps are performed in place of step 4.a.ii.1:

1. If *envRec*.HasBinding(*dn*) is **false**, then
    a. Perform ! *envRec*.CreateMutableBinding(*dn*, **false**).

During BlockDeclarationInstantiation the following steps are performed in place of step 4.b.iii:

1. If *envRec*.HasBinding(*fn*) is **false**, then
    a. Perform *envRec*.InitializeBinding(*fn*, *fo*).
2. Else,
    a. Assert: *d* is a *FunctionDeclaration*.
    b. Perform *envRec*.SetMutableBinding(*fn*, *fo*, **false**).

B.3.4 FunctionDeclarations in IfStatement Statement Clauses

The following augments the *IfStatement* production in 13.6:

IfStatement[Yield, Await, Return] :
- **if** (*Expression*[+In, ?Yield, ?Await]) *FunctionDeclaration*[?Yield, ?Await, ~Default] **else** *Statement*[?Yield, ?Await, ?Return]
- **if** (*Expression*[+In, ?Yield, ?Await]) *Statement*[?Yield, ?Await, ?Return] **else** *FunctionDeclaration*[?Yield, ?Await, ~Default]
- **if** (*Expression*[+In, ?Yield, ?Await]) *FunctionDeclaration*[?Yield, ?Await, ~Default] **else** *FunctionDeclaration*[?Yield, ?Await, ~Default]
- **if** (*Expression*[+In, ?Yield, ?Await]) *FunctionDeclaration*[?Yield, ?Await, ~Default]

This production only applies when parsing non-strict code. Code matching this production is processed as if each matching occurrence of *FunctionDeclaration*[?Yield, ?Await, ~Default] was the sole *StatementListItem* of a *BlockStatement* occupying that position in the source code. The semantics of such a synthetic *BlockStatement* includes the web legacy compatibility semantics specified in B.3.3.

B.3.5 VariableStatements in Catch Blocks

The content of subclause 13.15.1 is replaced with the following:

Catch : **catch** (*CatchParameter*) *Block*

- It is a Syntax Error if BoundNames of *CatchParameter* contains any duplicate elements.
- It is a Syntax Error if any element of the BoundNames of *CatchParameter* also occurs in the LexicallyDeclaredNames of *Block*.
- It is a Syntax Error if any element of the BoundNames of *CatchParameter* also occurs in the VarDeclaredNames of *Block* unless *CatchParameter* is *CatchParameter* : *BindingIdentifier* .

NOTE The *Block* of a *Catch* clause may contain **`var`** declarations that bind a name that is also bound by the *CatchParameter*. At runtime, such bindings are instantiated in the VariableDeclarationEnvironment. They do not shadow the same-named bindings introduced by the *CatchParameter* and hence the *Initializer* for such **`var`** declarations will assign to the corresponding catch parameter rather than the **`var`** binding.

This modified behaviour also applies to **`var`** and **`function`** declarations introduced by direct eval calls contained within the *Block* of a *Catch* clause. This change is accomplished by modifying the algorithm of 18.2.1.3 as follows:

Step 5.d.ii.2.a.i is replaced by:

1. If *thisEnvRec* is not the Environment Record for a *Catch* clause, throw a **SyntaxError** exception.

Step 9.d.ii.4.b.i.i is replaced by:

1. If *thisEnvRec* is not the Environment Record for a *Catch* clause, let *bindingExists* be **true**.

B.3.6 Initializers in ForIn Statement Heads

The following augments the *IterationStatement* production in 13.7:

IterationStatement[Yield, Await, Return] :
  for (**var** *BindingIdentifier*[?Yield, ?Await] *Initializer*[~In, ?Yield, ?Await] **in** *Expression*[+In, ?Yield, ?Await]) *Statement*[?Yield, ?Await, ?Return]

This production only applies when parsing non-strict code.

The static semantics of ContainsDuplicateLabels in 13.7.5.3 are augmented with the following:

IterationStatement : **for** (**var** *BindingIdentifier* *Initializer* **in** *Expression*) *Statement*

1. Return ContainsDuplicateLabels of *Statement* with argument *labelSet*.

The static semantics of ContainsUndefinedBreakTarget in 13.7.5.4 are augmented with the following:

IterationStatement : **for** (**var** *BindingIdentifier* *Initializer* **in** *Expression*) *Statement*

1. Return ContainsUndefinedBreakTarget of *Statement* with argument *labelSet*.

The static semantics of ContainsUndefinedContinueTarget in 13.7.5.5 are augmented with the following:

IterationStatement : **for** (**var** *BindingIdentifier* *Initializer* **in** *Expression*) *Statement*

1. Return ContainsUndefinedContinueTarget of *Statement* with arguments *iterationSet* and « ».

The static semantics of IsDestructuring in 13.7.5.6 are augmented with the following:

BindingIdentifier :
  Identifier
  yield
  await

1. Return **false**.

The static semantics of VarDeclaredNames in 13.7.5.7 are augmented with the following:

IterationStatement : `for` `(` `var` *BindingIdentifier* *Initializer* `in` *Expression* `)` *Statement*

1. Let *names* be the BoundNames of *BindingIdentifier*.
2. Append to *names* the elements of the VarDeclaredNames of *Statement*.
3. Return *names*.

The static semantics of VarScopedDeclarations in 13.7.5.8 are augmented with the following:

IterationStatement : `for` `(` `var` *BindingIdentifier* *Initializer* `in` *Expression* `)` *Statement*

1. Let *declarations* be a List containing *BindingIdentifier*.
2. Append to *declarations* the elements of the VarScopedDeclarations of *Statement*.
3. Return *declarations*.

The runtime semantics of LabelledEvaluation in 13.7.5.11 are augmented with the following:

IterationStatement : `for` `(` `var` *BindingIdentifier* *Initializer* `in` *Expression* `)` *Statement*

1. Let *bindingId* be StringValue of *BindingIdentifier*.
2. Let *lhs* be ? ResolveBinding(*bindingId*).
3. If IsAnonymousFunctionDefinition(*Initializer*) is **true**, then
    a. Let *value* be NamedEvaluation of *Initializer* with argument *bindingId*.
4. Else,
    a. Let *rhs* be the result of evaluating *Initializer*.
    b. Let *value* be ? GetValue(*rhs*).
5. Perform ? PutValue(*lhs*, *value*).
6. Let *keyResult* be ? ForIn/OfHeadEvaluation(« », *Expression*, enumerate).
7. Return ? ForIn/OfBodyEvaluation(*BindingIdentifier*, *Statement*, *keyResult*, enumerate, varBinding, *labelSet*).

B.3.7 The [[IsHTMLDDA]] Internal Slot

An *[[IsHTMLDDA]] internal slot* may exist on implementation-defined objects. Objects with an [[IsHTMLDDA]] internal slot behave like **undefined** in the ToBoolean and Abstract Equality Comparison abstract operations and when used as an operand for the `typeof` operator.

> NOTE Objects with an [[IsHTMLDDA]] internal slot are never created by this specification. However, the `document.all` object in web browsers is a host-created exotic object with this slot that exists for web compatibility purposes. There are no other known examples of this type of object and implementations should not create any with the exception of `document.all`.

B.3.7.1 Changes to ToBoolean

The result column in Table 10 for an argument type of Object is replaced with the following algorithm:

1. If *argument* has an [[IsHTMLDDA]] internal slot, return **false**.
2. Return **true**.

B.3.7.2 Changes to Abstract Equality Comparison

The following steps are inserted after step 3 of the Abstract Equality Comparison algorithm:

1. If Type(x) is Object and x has an [[IsHTMLDDA]] internal slot and y is either **null** or **undefined**, return **true**.
2. If x is either **null** or **undefined** and Type(y) is Object and y has an [[IsHTMLDDA]] internal slot, return **true**.

B.3.7.3 Changes to the `typeof` Operator

The following table entry is inserted into Table 35 immediately preceeding the entry for "Object (implements [[Call]])":

Table 86: Additional `typeof` Operator Results

Type of *val*	Result
Object (has an [[IsHTMLDDA]] internal slot)	**"undefined"**

C The Strict Mode of ECMAScript

The strict mode restriction and exceptions

- **`implements`**, **`interface`**, **`let`**, **`package`**, **`private`**, **`protected`**, **`public`**, **`static`**, and **`yield`** are reserved words within strict mode code. (11.6.2).
- A conforming implementation, when processing strict mode code, must not extend, as described in B.1.1, the syntax of *NumericLiteral* to include *LegacyOctalIntegerLiteral*, nor extend the syntax of *DecimalIntegerLiteral* to include *NonOctalDecimalIntegerLiteral*.
- A conforming implementation, when processing strict mode code, may not extend the syntax of *EscapeSequence* to include *LegacyOctalEscapeSequence* as described in B.1.2.
- Assignment to an undeclared identifier or otherwise unresolvable reference does not create a property in the global object. When a simple assignment occurs within strict mode code, its *LeftHandSideExpression* must not evaluate to an unresolvable Reference. If it does a **ReferenceError** exception is thrown (6.2.4.9). The *LeftHandSideExpression* also may not be a reference to a data property with the attribute value { [[Writable]]: **false** }, to an accessor property with the attribute value { [[Set]]: **undefined** }, nor to a non-existent property of an object whose [[Extensible]] internal slot has the value **false**. In these cases a **`TypeError`** exception is thrown (12.15).
- An *IdentifierReference* with the StringValue **"eval"** or **"arguments"** may not appear as the *LeftHandSideExpression* of an Assignment operator (12.15) or of an *UpdateExpression* (12.4) or as the *UnaryExpression* operated upon by a Prefix Increment (12.4.6) or a Prefix Decrement (12.4.7) operator.
- Arguments objects for strict functions define a non-configurable accessor property **"callee"** which throws a **TypeError** exception on access (9.4.4.6).
- Arguments objects for strict functions do not dynamically share their array-indexed property values with the corresponding formal parameter bindings of their functions. (9.4.4).
- For strict functions, if an arguments object is created the binding of the local identifier **`arguments`** to the arguments object is immutable and hence may not be the target of an assignment expression. (9.2.10).
- It is a **SyntaxError** if the StringValue of a *BindingIdentifier* is **"eval"** or **"arguments"** within strict mode code (12.1.1).
- Strict mode eval code cannot instantiate variables or functions in the variable environment of the caller to eval. Instead, a new variable environment is created and that environment is used for declaration binding

instantiation for the eval code (18.2.1).

- If **this** is evaluated within strict mode code, then the **this** value is not coerced to an object. A **this** value of **undefined** or **null** is not converted to the global object and primitive values are not converted to wrapper objects. The **this** value passed via a function call (including calls made using **`Function.prototype.apply`** and **`Function.prototype.call`**) do not coerce the passed **this** value to an object (9.2.1.2, 19.2.3.1, 19.2.3.3).
- When a **`delete`** operator occurs within strict mode code, a **SyntaxError** is thrown if its *UnaryExpression* is a direct reference to a variable, function argument, or function name (12.5.3.1).
- When a **`delete`** operator occurs within strict mode code, a **TypeError** is thrown if the property to be deleted has the attribute { [[Configurable]]: **false** } (12.5.3.2).
- Strict mode code may not include a *WithStatement*. The occurrence of a *WithStatement* in such a context is a **SyntaxError** (13.11.1).
- It is a **SyntaxError** if a *CatchParameter* occurs within strict mode code and BoundNames of *CatchParameter* contains either **`eval`** or **`arguments`** (13.15.1).
- It is a **SyntaxError** if the same *BindingIdentifier* appears more than once in the *FormalParameters* of a strict function. An attempt to create such a function using a **`Function`**, **`Generator`**, or **`AsyncFunction`** constructor is a **SyntaxError** (14.1.2, 19.2.1.1.1).
- An implementation may not extend, beyond that defined in this specification, the meanings within strict functions of properties named **"caller"** or **"arguments"** of function instances.

D Corrections and Clarifications in ECMAScript 2015 with Possible Compatibility Impact

8.1.1.4.15-8.1.1.4.18 Edition 5 and 5.1 used a property existence test to determine whether a global object property corresponding to a new global declaration already existed. ECMAScript 2015 uses an own property existence test. This corresponds to what has been most commonly implemented by web browsers.

9.4.2.1: The 5th Edition moved the capture of the current array length prior to the integer conversion of the array index or new length value. However, the captured length value could become invalid if the conversion process has the side-effect of changing the array length. ECMAScript 2015 specifies that the current array length must be captured after the possible occurrence of such side-effects.

20.4.1.14: Previous editions permitted the TimeClip abstract operation to return either **+0** or **-0** as the representation of a 0 time value. ECMAScript 2015 specifies that **+0** always returned. This means that for ECMAScript 2015 the time value of a Date object is never observably **-0** and methods that return time values never return **-0**.

20.4.1.15: If a UTC offset representation is not present, the local time zone is used. Edition 5.1 incorrectly stated that a missing time zone should be interpreted as **"z"**.

20.4.4.36: If the year cannot be represented using the Date Time String Format specified in 20.4.1.15 a RangeError exception is thrown. Previous editions did not specify the behaviour for that case.

20.4.4.41: Previous editions did not specify the value returned by **`Date.prototype.toString`** when this time value is **NaN**. ECMAScript 2015 specifies the result to be the String value **"Invalid Date"**.

21.2.3.1, 21.2.3.2.4: Any LineTerminator code points in the value of the **"source"** property of a RegExp instance must be expressed using an escape sequence. Edition 5.1 only required the escaping of **`/`**.

21.2.5.7, 21.2.5.10: In previous editions, the specifications for **`String.prototype.match`** and **`String.prototype.replace`** was incorrect for cases where the pattern argument was a RegExp value whose **`global`** flag is set. The previous specifications stated that for each attempt to match the pattern, if **`lastIndex`** did not change it should be incremented by 1. The correct behaviour is that **`lastIndex`** should be incremented by one only if the pattern matched the empty String.

22.1.3.27, 22.1.3.27.1: Previous editions did not specify how a **NaN** value returned by a *comparefn* was interpreted by **`Array.prototype.sort`**. ECMAScript 2015 specifies that such as value is treated as if **+0** was returned from the *comparefn*. ECMAScript 2015 also specifies that ToNumber is applied to the result returned by a *comparefn*. In previous editions, the effect of a *comparefn* result that is not a Number value was implementation-dependent. In practice, implementations call ToNumber.

E Additions and Changes That Introduce Incompatibilities with Prior Editions

6.2.4: In ECMAScript 2015, Function calls are not allowed to return a Reference value.

7.1.4.1: In ECMAScript 2015, ToNumber applied to a String value now recognizes and converts *BinaryIntegerLiteral* and *OctalIntegerLiteral* numeric strings. In previous editions such strings were converted to **NaN**.

8.2: In ECMAScript 2018, Template objects are canonicalized based on Parse Node (source location), instead of across all occurrences of that template literal or tagged template in a Realm in previous editions.

11.2: In ECMAScript 2016, Unicode 8.0.0 or higher is mandated, as opposed to ECMAScript 2015 which mandated Unicode 5.1. In particular, this caused U+180E MONGOLIAN VOWEL SEPARATOR, which was in the **`Space_Separator`** (**`Zs`**) category and thus treated as whitespace in ECMAScript 2015, to be moved to the **`Format`** (**`Cf`**) category (as of Unicode 6.3.0). This causes whitespace-sensitive methods to behave differently. For example, **`"\u180E".trim().length`** was **`0`** in previous editions, but **`1`** in ECMAScript 2016 and later. Additionally, ECMAScript 2017 mandated always using the latest version of the Unicode standard.

11.6: In ECMAScript 2015, the valid code points for an *IdentifierName* are specified in terms of the Unicode properties "ID_Start" and "ID_Continue". In previous editions, the valid *IdentifierName* or *Identifier* code points were specified by enumerating various Unicode code point categories.

11.9.1: In ECMAScript 2015, Automatic Semicolon Insertion adds a semicolon at the end of a do-while statement if the semicolon is missing. This change aligns the specification with the actual behaviour of most existing implementations.

12.2.6.1: In ECMAScript 2015, it is no longer an early error to have duplicate property names in Object Initializers.

12.15.1: In ECMAScript 2015, strict mode code containing an assignment to an immutable binding such as the function name of a *FunctionExpression* does not produce an early error. Instead it produces a runtime error.

13.2: In ECMAScript 2015, a *StatementList* beginning with the token let followed by the input elements *LineTerminator* then *Identifier* is the start of a *LexicalDeclaration*. In previous editions, automatic semicolon insertion would always insert a semicolon before the *Identifier* input element.

13.5: In ECMAScript 2015, a *StatementListItem* beginning with the token **`let`** followed by the token **`[`** is the start of a *LexicalDeclaration*. In previous editions such a sequence would be the start of an *ExpressionStatement*.

13.6.7: In ECMAScript 2015, the normal completion value of an *IfStatement* is never the value empty. If no *Statement* part is evaluated or if the evaluated *Statement* part produces a normal completion whose value is empty, the completion value of the *IfStatement* is **undefined**.

13.7: In ECMAScript 2015, if the **`(`** token of a for statement is immediately followed by the token sequence **`let [`** then the **`let`** is treated as the start of a *LexicalDeclaration*. In previous editions such a token sequence would be the start of an *Expression*.

13.7: In ECMAScript 2015, if the (token of a for-in statement is immediately followed by the token sequence **`let [`** then the **`let`** is treated as the start of a *ForDeclaration*. In previous editions such a token sequence would be the start of an *LeftHandSideExpression*.

13.7: Prior to ECMAScript 2015, an initialization expression could appear as part of the *VariableDeclaration* that precedes the **`in`** keyword. In ECMAScript 2015, the *ForBinding* in that same position does not allow the occurrence of such an initializer. In ECMAScript 2017, such an initializer is permitted only in non-strict code.

13.7: In ECMAScript 2015, the completion value of an *IterationStatement* is never the value empty. If the *Statement* part of an *IterationStatement* is not evaluated or if the final evaluation of the *Statement* part produces a completion whose value is empty, the completion value of the *IterationStatement* is **undefined**.

13.11.7: In ECMAScript 2015, the normal completion value of a *WithStatement* is never the value empty. If evaluation of the *Statement* part of a *WithStatement* produces a normal completion whose value is empty, the completion value of the *WithStatement* is **undefined**.

13.12.11: In ECMAScript 2015, the completion value of a *SwitchStatement* is never the value empty. If the *CaseBlock* part of a *SwitchStatement* produces a completion whose value is empty, the completion value of the *SwitchStatement* is **undefined**.

13.15: In ECMAScript 2015, it is an early error for a *Catch* clause to contain a **`var`** declaration for the same *Identifier* that appears as the *Catch* clause parameter. In previous editions, such a variable declaration would be instantiated in the enclosing variable environment but the declaration's *Initializer* value would be assigned to the *Catch* parameter.

13.15, 18.2.1.3: In ECMAScript 2015, a runtime **SyntaxError** is thrown if a *Catch* clause evaluates a non-strict direct **`eval`** whose eval code includes a **`var`** or **`FunctionDeclaration`** declaration that binds the same *Identifier* that appears as the *Catch* clause parameter.

13.15.8: In ECMAScript 2015, the completion value of a *TryStatement* is never the value empty. If the *Block* part of a *TryStatement* evaluates to a normal completion whose value is empty, the completion value of the *TryStatement* is **undefined**. If the *Block* part of a *TryStatement* evaluates to a throw completion and it has a *Catch* part that evaluates to a normal completion whose value is empty, the completion value of the *TryStatement* is **undefined** if there is no *Finally* clause or if its *Finally* clause evaluates to an empty normal completion.

14.3.8 In ECMAScript 2015, the function objects that are created as the values of the [[Get]] or [[Set]] attribute of accessor properties in an *ObjectLiteral* are not constructor functions and they do not have a **"prototype"** own property. In the previous edition, they were constructors and had a **"prototype"** property.

19.1.2.6: In ECMAScript 2015, if the argument to **`Object.freeze`** is not an object it is treated as if it was a non-extensible ordinary object with no own properties. In the previous edition, a non-object argument always causes a **TypeError** to be thrown.

19.1.2.8: In ECMAScript 2015, if the argument to **`Object.getOwnPropertyDescriptor`** is not an object an

attempt is made to coerce the argument using ToObject. If the coercion is successful the result is used in place of the original argument value. In the previous edition, a non-object argument always causes a **TypeError** to be thrown.

19.1.2.10: In ECMAScript 2015, if the argument to **`Object.getOwnPropertyNames`** is not an object an attempt is made to coerce the argument using ToObject. If the coercion is successful the result is used in place of the original argument value. In the previous edition, a non-object argument always causes a **TypeError** to be thrown.

19.1.2.12: In ECMAScript 2015, if the argument to **`Object.getPrototypeOf`** is not an object an attempt is made to coerce the argument using ToObject. If the coercion is successful the result is used in place of the original argument value. In the previous edition, a non-object argument always causes a **TypeError** to be thrown.

19.1.2.14: In ECMAScript 2015, if the argument to **`Object.isExtensible`** is not an object it is treated as if it was a non-extensible ordinary object with no own properties. In the previous edition, a non-object argument always causes a **TypeError** to be thrown.

19.1.2.15: In ECMAScript 2015, if the argument to **`Object.isFrozen`** is not an object it is treated as if it was a non-extensible ordinary object with no own properties. In the previous edition, a non-object argument always causes a **TypeError** to be thrown.

19.1.2.16: In ECMAScript 2015, if the argument to **`Object.isSealed`** is not an object it is treated as if it was a non-extensible ordinary object with no own properties. In the previous edition, a non-object argument always causes a **TypeError** to be thrown.

19.1.2.17: In ECMAScript 2015, if the argument to **`Object.keys`** is not an object an attempt is made to coerce the argument using ToObject. If the coercion is successful the result is used in place of the original argument value. In the previous edition, a non-object argument always causes a **TypeError** to be thrown.

19.1.2.18: In ECMAScript 2015, if the argument to **`Object.preventExtensions`** is not an object it is treated as if it was a non-extensible ordinary object with no own properties. In the previous edition, a non-object argument always causes a **TypeError** to be thrown.

19.1.2.20: In ECMAScript 2015, if the argument to **`Object.seal`** is not an object it is treated as if it was a non-extensible ordinary object with no own properties. In the previous edition, a non-object argument always causes a **TypeError** to be thrown.

19.2.3.2: In ECMAScript 2015, the [[Prototype]] internal slot of a bound function is set to the [[GetPrototypeOf]] value of its target function. In the previous edition, [[Prototype]] was always set to %Function.prototype%.

19.2.4.1: In ECMAScript 2015, the **"length"** property of function instances is configurable. In previous editions it was non-configurable.

19.5.6.2: In ECMAScript 2015, the [[Prototype]] internal slot of a *NativeError* constructor is the Error constructor. In previous editions it was the Function prototype object.

20.4.4 In ECMAScript 2015, the Date prototype object is not a Date instance. In previous editions it was a Date instance whose TimeValue was **NaN**.

21.1.3.10 In ECMAScript 2015, the **`String.prototype.localeCompare`** function must treat Strings that are canonically equivalent according to the Unicode standard as being identical. In previous editions implementations were permitted to ignore canonical equivalence and could instead use a bit-wise comparison.

21.1.3.25 and 21.1.3.27 In ECMAScript 2015, lowercase/upper conversion processing operates on code points. In

previous editions such the conversion processing was only applied to individual code units. The only affected code points are those in the Deseret block of Unicode.

21.1.3.28 In ECMAScript 2015, the **`String.prototype.trim`** method is defined to recognize white space code points that may exists outside of the Unicode BMP. However, as of Unicode 7 no such code points are defined. In previous editions such code points would not have been recognized as white space.

21.2.3.1 In ECMAScript 2015, If the *pattern* argument is a RegExp instance and the *flags* argument is not **undefined**, a new RegExp instance is created just like *pattern* except that *pattern*'s flags are replaced by the argument *flags*. In previous editions a **TypeError** exception was thrown when *pattern* was a RegExp instance and *flags* was not **undefined**.

21.2.5 In ECMAScript 2015, the RegExp prototype object is not a RegExp instance. In previous editions it was a RegExp instance whose pattern is the empty String.

21.2.5 In ECMAScript 2015, **"source"**, **"global"**, **"ignoreCase"**, and **"multiline"** are accessor properties defined on the RegExp prototype object. In previous editions they were data properties defined on RegExp instances.

24.4.12: In ECMAScript 2019, **`Atomics.wake`** has been renamed to **`Atomics.notify`** to prevent confusion with **`Atomics.wait`**.

25.1.4.4, 25.5.3.5: In ECMAScript 2019, the number of Jobs enqueued by **`await`** was reduced, which could create an observable difference in resolution order between a **`then()`** call and an **`await`** expression.

F Colophon

This specification is authored on GitHub in a plaintext source format called Ecmarkup. Ecmarkup is an HTML and Markdown dialect that provides a framework and toolset for authoring ECMAScript specifications in plaintext and processing the specification into a full-featured HTML rendering that follows the editorial conventions for this document. Ecmarkup builds on and integrates a number of other formats and technologies including Grammarkdown for defining syntax and Ecmarkdown for authoring algorithm steps. PDF renderings of this specification are produced by printing the HTML rendering to a PDF.

Prior editions of this specification were authored using Word—the Ecmarkup source text that formed the basis of this edition was produced by converting the ECMAScript 2015 Word document to Ecmarkup using an automated conversion tool.

G Bibliography

1. *IEEE 754-2019*: *IEEE Standard for Floating-Point Arithmetic*. Institute of Electrical and Electronic Engineers, New York (2019)

   NOTE There are no normative changes between IEEE 754-2008 and IEEE 754-2019 that affect the ECMA-262 specification.

2. *The Unicode Standard*, available at <https://unicode.org/versions/latest>

3. *Unicode Technical Note #5: Canonical Equivalence in Applications*, available at <https://unicode.org/notes/tn5/>
4. *Unicode Technical Standard #10: Unicode Collation Algorithm*, available at <https://unicode.org/reports/tr10/>
5. *Unicode Standard Annex #15, Unicode Normalization Forms*, available at <https://unicode.org/reports/tr15/>
6. *Unicode Standard Annex #18: Unicode Regular Expressions*, available at <https://unicode.org/reports/tr18/>
7. *Unicode Standard Annex #24: Unicode* `Script` *Property*, available at <https://unicode.org/reports/tr24/>
8. *Unicode Standard Annex #31, Unicode Identifiers and Pattern Syntax*, available at <https://unicode.org/reports/tr31/>
9. *Unicode Standard Annex #44: Unicode Character Database*, available at <https://unicode.org/reports/tr44/>
10. *Unicode Technical Standard #51: Unicode Emoji*, available at <https://unicode.org/reports/tr51/>
11. *IANA Time Zone Database*, available at <https://www.iana.org/time-zones>
12. ISO 8601:2004(E) *Data elements and interchange formats — Information interchange — Representation of dates and times*
13. *RFC 1738 "Uniform Resource Locators (URL)"*, available at <https://tools.ietf.org/html/rfc1738>
14. *RFC 2396 "Uniform Resource Identifiers (URI): Generic Syntax"*, available at <https://tools.ietf.org/html/rfc2396>
15. *RFC 3629 "UTF-8, a transformation format of ISO 10646"*, available at <https://tools.ietf.org/html/rfc3629>
16. *RFC 7231 "Hypertext Transfer Protocol (HTTP/1.1): Semantics and Content"*, available at <https://tools.ietf.org/html/rfc7231>

H Copyright & Software License

Ecma International

Rue du Rhone 114

CH-1204 Geneva

Tel: +41 22 849 6000

Fax: +41 22 849 6001

Web: https://ecma-international.org/

Copyright Notice

Software License